March 31, 1970 R. W. WOLLENTIN ET AL 3,504,212

HIGH CONTRAST DISPLAY DEVICE INCORPORATING A LIGHT ABSORPTION AND SCATTERING LAYER

Filed March 20, 1967

FIG. 1

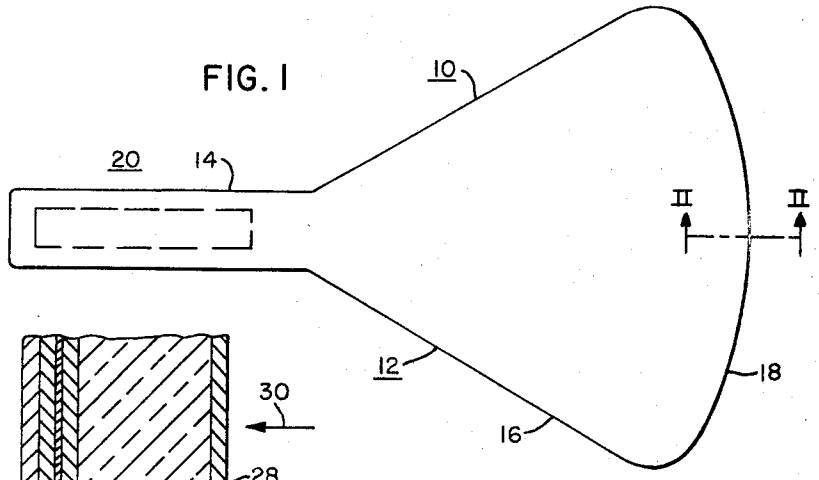

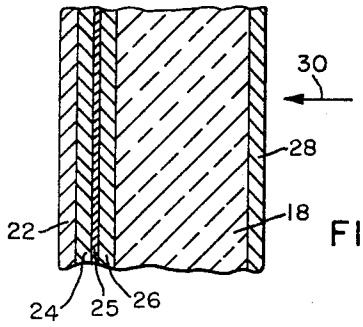

FIG. 2

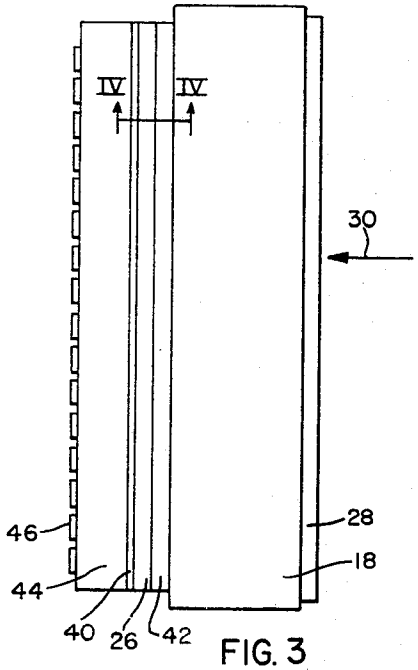

FIG. 3

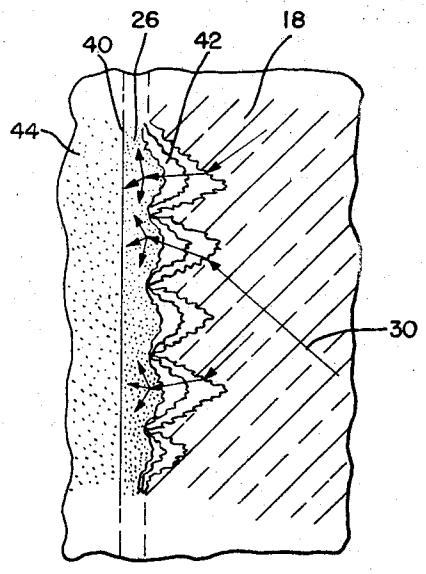

FIG. 4

WITNESSES

Helen M. Harbaugh

James F. Young

INVENTORS

Robert W. Wollentin &

Michael K. Kilcoyne

BY

Charles F. Renz

ATTORNEY

United States Patent Office 3,504,212 Patented Mar. 31, 1970

3,504,212

HIGH CONTRAST DISPLAY DEVICE INCORPORATING A LIGHT ABSORPTION AND SCATTERING LAYER

Robert W. Wollentin, Thousand Oaks, and Michael K. Kilcoyne, Camarillo, Calif., assignors to Westinghouse Electric Corporation, Pittsburgh, Pa., a corporation of Pennsylvania

Filed Mar. 20, 1967, Ser. No. 624,406
Int. Cl. H01j 29/18
U.S. Cl. 313—92 8 Claims

ABSTRACT OF THE DISCLOSURE

A display device in which a light absorbing and scattering layer of specific material and composition is positioned between the light emitting screen and the viewing window.

This invention relates to display devices and more particularly to those display devices providing a high contrast.

There are many situations in which it is desirable to display information under high ambient light conditions. Such an example is the environment in an airplane cockpit or other daylight situations where ambient light levels may be in the range of thousands of foot candles. One method of overcoming high ambient light levels is to present displays with extremely high brightness. A direct view storage tube is capable of providing thousands of foot lamberts in brightness and may be operated under high ambient light levels. In solid state electroluminescent displays as well as typical television displays, this range of brightness is not available under normal operating conditions.

It is accordingly an object of this invention to provide means for improving display visibility and readability by improving the contrast in the display rather than increasing the brightness.

It is another object to provide an improved display device which provides a high contrast display for use under high ambient lighting conditions.

It is another object to provide a layer of material which exhibits high light absorption and scattering properties.

Briefly, the present invention accomplishes the above-cited objects by providing a light absorption and scattering layer of a smoke or porous-like structure between the phosphor or light producing layer and the window through which the light is viewed by the observer.

These and other objects and advantages of the present invention will become more apparent when considered in view of the following detailed description of drawings, in which:

FIGURE 1 illustrates a cathode ray display device embodying the invention:

FIG. 2 is an enlarged sectional view of a portion of the viewing window taken along line II—II of FIG. 1;

FIG. 3 is a side elevational view of an electroluminescent display device embodying the invention; and

FIG. 4 is an enlarged sectional view of a portion of the display screen taken along line IV—IV of FIG. 3.

Referring in detail to FIG. 1, there is illustrated a cathode ray tube **10**. The cathode ray tube includes an envelope **12** including a neck portion **14**, a flared portion **16** and a window or face plate portion **18**. An electron gun **20** is provided within the neck portion **14** of the envelope **12** for generating and directing an electron beam in a well known manner and suitable deflection means (not shown) are provided for scanning the electron beam over the face plate **18**.

The face plate **18** of which a section in enlarged detail is shown in FIG. 2 supports on its inner surface an electrically conductive coating **22**, a suitable phosphor coating **24**, a separating layer **25** and a light scattering and absorbing layer **26** in the order named with the layer **26** disposed on the inner surface of the face plate **18**. The face plate window **18** may also be provided with a suitable non-reflective coating **28** on the outer surface of the face plate **18**. In the preparation of the viewing window, the face plate portion **18** is etched on both the inner and outer surfaces by acid treatment such as hydrofluoric acid to provide a frosty type surface. The face plate **18** is then heated on both sides to glaze or very slightly fire polish the etched surfaces to achieve a satin type finish on both the inner and outer surfaces of the face plate **18**. The face plate **18** may be of a suitable glass such as gray tinted hard lime glass which has a transmission of about 50 to 70 percent in the visible region.

The next step in the preparation of the viewing window is to provide the light scattering and absorbing layer **26** on the inner surface of the face plate **18**. The layer **26** is normally provided by evacuating the envelope **12** to a pressure of about 10^{-8} torr. The envelope **12** is then back filled with an inert gas such as nitrogen or argon to a pressure of about 1 to 5 microns. A suitable metal with neutral spectral characteristics is then evaporated from a suitable filament or boat. The specific material that has provided superior results is an aluminum-gold alloy containing about 75 percent by weight of gold. The resulting layer **26** is a smoke-like deposit or a porous type deposit in which the deposit is about 10 percent of the normal bulk density of the material and exhibits a very low specular reflectance. The non-specular reflection property of the smoke deposit is one of its major assets since it greatly reduces reflection of polarized light. Ambient light contains a great amount of polarized light. The smoke deposit minimizes specular reflectance which increases contrast and lowers total reflectance. The thickness of the layer **26** is about $20\text{–}100\times10^{-6}$ mm. A thin layer **25** of SiO or TiO may be vacuum vapor deposited to promote adhesion. The thickness of layer **25** is about $5\text{–}20\times10^{-6}$ mm.

The next step in the operation is substantially conventional in the manufacture of cathode ray tubes in which the phosphor layer **24** of a suitable material such as ZnS:Mn, Cu, or ZnS:Ag or others known to the art may be deposited by normal settling techniques or other suitable techniques and then the vacuum deposition of a suitable thin layer **22** of silver is applied to reflect phosphor emission or aluminum toward the viewing face. The remaining structure and assembly procedure are well known in the art.

The contrast in a cathode ray tube or any display device may be roughly stated to be equal to the ratio of:

$$\frac{100\%}{1+\frac{TRI}{E}}$$

in which T is the transmittance of the viewing window, R is the reflectance of the viewing window, I is the incident or ambient illumination and E is the light emission from the light source behind the viewing window. The above expression does ignore somewhat the reduction in contrast due to secondary reflection but these effects are virtually eliminated by the structure described herein. The above expression shows the functions effecting contrast to be the transmittance of a window, the reflectance of the phosphor or other medium in the window and assumes the incident ambient light and the emitted light to be fixed parameters. The reflection coefficient for a phosphor is typically about

50 percent. If it is assumed that the reflectance is a fixed parameter, then the contrast becomes a function of the transmittance of the window. A transmittance of 50 percent would attenuate the emitted light to ½ and the reflected component of the incident light to ¼ of their original values, thus giving a contrast improvement of 2 to 1. If the transmittance were only 10 percent, the window would pass 10 percent of the emitted light, but only 1 percent of the reflected ambient. Ignoring for the moment the front surface reflections, a contrast improvement of 10 to 1 would be achieved. The emitted light however would be attenuated to only 1/10 of its original value. For example, if the emitted light were 20 foot lamberts which is about the average brightness of a television screen, the effective emitted value would be only 2 foot lamberts. Therefore, while substantial contrast improvements can be made by the use of neutral density filters in the window, the attendant reduction in emitted brightness is sometimes a great disadvantage. Under relatively high ambient light conditions, where more filtering is needed, the reduction in brightness was so great that visibility in the display was not actually improved because of the lack of signal for detection by the human eye. From the above, it is obvious that it would be desirable to develop techniques which would allow effective absorption of the incident ambient light without seriously reducing the brightness of the emitted light component. The structure shown in FIG. 2 accomplishes this. The key layer in this assembly is the light scattering and absorbing layer **26**. Its effect on the incident light can thus be described by referral to FIG. 2. The incident light ray **30** enters through the reflecting layer **28**, which substantially reduces specular light reflection from the face plate. The layer **28** may be of MgF_2 or mixed fluorides as known to the art and formed by vacuum vapor deposition. The refracted light ray **30** continues on through the face plate **18** and into the light scattering layer **26**. The etched and glazed surfaces of the face plate **18** also refracts and scatters the light ray **30** from the ambient lighting source or sources. It is important that the innerface surface in this region, that is between the face plate **18** and the light scattering layer **26**, be controlled by etching and then glazing the glass surface prior to the deposition of the layer **26**. This treatment substantially reduces specularity in the subsequent layers and helps to diffuse the light ray **30**. If an incoming light ray **30** does not strike a particle in the scattering layer **26**, it is then scattered as it strikes the phosphor layer **24** which also has diffused reflection characteristics. The probability of being reflected off the phosphor layer **24** and back through the light scattering and absorbing layer **26** is extremely small. In many cases, the light ray **30** is scattered beyond the critical angle and thus becomes totally internally reflected and eventually absorbed by the particles. At the same time, the phosphor emission, which is somewhat directional itself is closely coupled to the layer **26** and is more efficiently transmitted. The reflective layer **22** also assists in accomplishing a forward directed enlarged light output from the phosphor layer. The layer **26** is deposited such that the thickness plus the statistical distribution of particles makes it highly unlikely for an incident light ray to penetrate the layer **26** and then be reflected back through without being dispersed and absorbed. At the same time, emission from the phosphor layer **24** is transmitted reasonably efficient through the absorbing and scattering layer **26**. Experimental results have shown that 25 to 30 percent of the light from the phosphor layer **24** is transmitted, while 98 to 99 percent of the incident ambient light is absorbed. This structure is found to effectively improve contrast by as much as 30 to 1 or 50 to 1 and is far superior to other more conventional methods. The layer **26** is essentially neutral in its action and treats all colors in a nearly similar manner. The layer **26** is only very slightly spectrally selective in its absorption characteristics for both the phosphor emission or the incident light.

FIGS. 3 and 4 illustrate another embodiment of the invention in which the light absorbing layer **26** is utilized in an electroluminescent display device. In FIGS. 3 and 4 the glass support member **18** is provided. The member **18** is etched and glazed in a similar manner as described with respect ot FIGS. 1 and 2. The non-reflective coating **28** is provided on the viewing side of the glass support member **18**. On the opposite side of the glass support member **18** is an electrically conductive layer **42** of a thickness of about 2000 to 40,000 angstrom units and of a suitable material such as tin oxide. The light scattering and absorbing layer **26** is deposited on the exposed surface of the layer **42**. The layer **26** has previously been described. Deposited on the exposed surface of the light scattering layer **26** is a thin lacquer film **40** to promote adhesion about 0.05 to 20 microns in thickness. A suitable electroluminescent phosphor layer **44** is deposited on the layer **40** and can be applied by spraying, silk screening or other conventional techniques. The layer **44** may be of a suitable dielectric such as cyanoethyl cellulose or cyanoethylated starch or others as known to the art in which particles of electroluminescent phosphors such as ZnS:Mn,Cu; ZnS:Cu or others as known to the art are suspended therein. In addition, dyes and pigments may also be provided within the layer **44** for additional absorption properties of the incident light. A backing electrode **46** of a suitable electrically conductive material such as tin oxide is provided on the exposed surface of the layer **44** and a suitable potential may be applied across the layers **42** and **46** to provide the necessary potential for emission of light from the electroluminescent device. In FIG. 4, the numerous light diffusing and scattering surfaces to the ambient light ray are illustrated.

Since numerous changes may be made in the above described apparatus and different embodiments of the invention may be made without departing from the spirit thereof, it is intended that all the matter contained in the foregoing description or shown in the accompanying drawings, shall be interpreted as illustrative and not in a limiting sense.

We claim as our invention:

1. A display device comprising a layer of material for emission of light in response to excitation, a viewing window through which the light from said layer passes and an intermediate layer of ambient light scattering and absorbing material positioned between said layer of said material and said viewing window, said intermediate layer being a porous coating having a density of about 10 percent of its normal bulk density.

2. The display device set forth in claim **1** in which said light emitting layer is of a dielectric material in which particles of electroluminescent phosphor are embedded.

3. A display device comprising a layer of material for emission of light in response to excitation, a viewing window through which said light passes and an intermediate layer of ambient light scattering and absorbing material positioned between said light emitting layer and said window, said light scattering and absorbing layer comprised of gold and aluminum.

4. A display device comprising a layer of material for emission of light in response to excitation, a viewing window through which said light passes and an intermediate layer of ambient light scattering and absorbing material positioned between said light emitting layer and said window, said light scattering and absorbing layer consisting essentially of gold and aluminum.

5. A display device comprising a layer of material for emission of light in response to excitation, a viewing window through which said light passes and an intermediate layer of ambient light scattering and absorbing material positioned between said light emitting layer and said window, said light scattering and absorbing layer consisting essentially of an alloy of aluminum and gold and containing about 75% by weight of gold.

6. A display device comprising a layer of material for emission of light in response to excitation, a viewing window through which the light from said layer passes and an intermediate layer of ambient light scattering and absorbing material positioned between said layer of said material and said viewing window, said intermediate layer being of a porous coating having a density less than its normal bulk density and comprised of gold and aluminum.

7. A display device comprising a layer of material for emission of light in response to excitation, a viewing window through which the light from said layer passes and an intermediate layer of ambient light scattering and absorbing material positioned between said layer of said material and said viewing window, said intermediate layer being a porous coating having a density less than its normal bulk density and comprised of gold and aluminum, said layer consisting essentially of gold and aluminum.

8. A display device comprising a layer of material for emission of light in response to excitation, a viewing window through which the light from said layer passes and an intermediate layer of ambient light scattering and absorbing material positioned between said layer of said material and said viewing window, said intermediate layer being a porous coating having a density less than its normal bulk density and comprised of gold and aluminum, said layer consisting essentially of an alloy of aluminum and gold and containing about 75% by weight of gold.

References Cited

UNITED STATES PATENTS

2,197,625	4/1940	Teves et al.	313—92
2,567,714	9/1951	Kaplan	313—92
2,819,420	1/1958	Koller	250—80
3,313,881	4/1967	Dannebaum	313—92
2,854,349	9/1958	Dreyfus et al.	117—33.3
2,963,611	12/1960	Meister et al.	313—116
3,052,810	9/1962	Mash	250—80 X
3,197,662	7/1965	Schneeberger	313—104
3,231,775	1/1966	Pritchard	313—92

JAMES W. LAWRENCE, Primary Examiner

E. R. LA ROCHE, Assistant Examiner

U.S. Cl. X.R.

250—80; 313—116