(12) STANDARD PATENT (11) Application No. **AU 2006203020 B2**
(19) AUSTRALIAN PATENT OFFICE

(54) Title
Surgical instrument with laterally moved shaft actuator coupled to pivoting articulation joint

(51) International Patent Classification(s)
A61B 17/068 (2006.01) ***A61B 17/28*** (2006.01)
A61B 17/072 (2006.01) ***A61B 17/32*** (2006.01)

(21) Application No: **2006203020** (22) Date of Filing: **2006.07.14**

(30) Priority Data

(31) Number	(32) Date	(33) Country
11/184159	**2005.07.19**	**US**

(43) Publication Date: **2007.02.08**
(43) Publication Journal Date: **2007.02.08**
(44) Accepted Journal Date: **2012.03.22**

(71) Applicant(s)
Ethicon Endo-Surgery, Inc.

(72) Inventor(s)
Wales, Kenneth S.

(74) Agent / Attorney
Freehills Patent & Trade Mark Attorneys, Level 43 101 Collins Street, Melbourne, VIC, 3000

(56) Related Art
US4921482 A (Hammerslag et al.) 1 May 1990
US5405344 A (Williamson et al.) 11 April 1995

2006203020 14 Jul 2006

SURGICAL INSTRUMENT WITH LATERALLY MOVED SHAFT ACTUATOR COUPLED TO PIVOTING ARTICULATION JOINT

Abstract of the Invention

A surgical instrument particularly suited to endoscopic use articulates an end effector by including a laterally sliding member in a proximal portion of a shaft that pivots the end effector to a selected side. Differentially opposing actuating forces (e.g., hydraulic, fluidic, mechanical) act against the laterally sliding member without binding by incorporating guidance mechanisms between the laterally sliding member and a frame of the shaft.

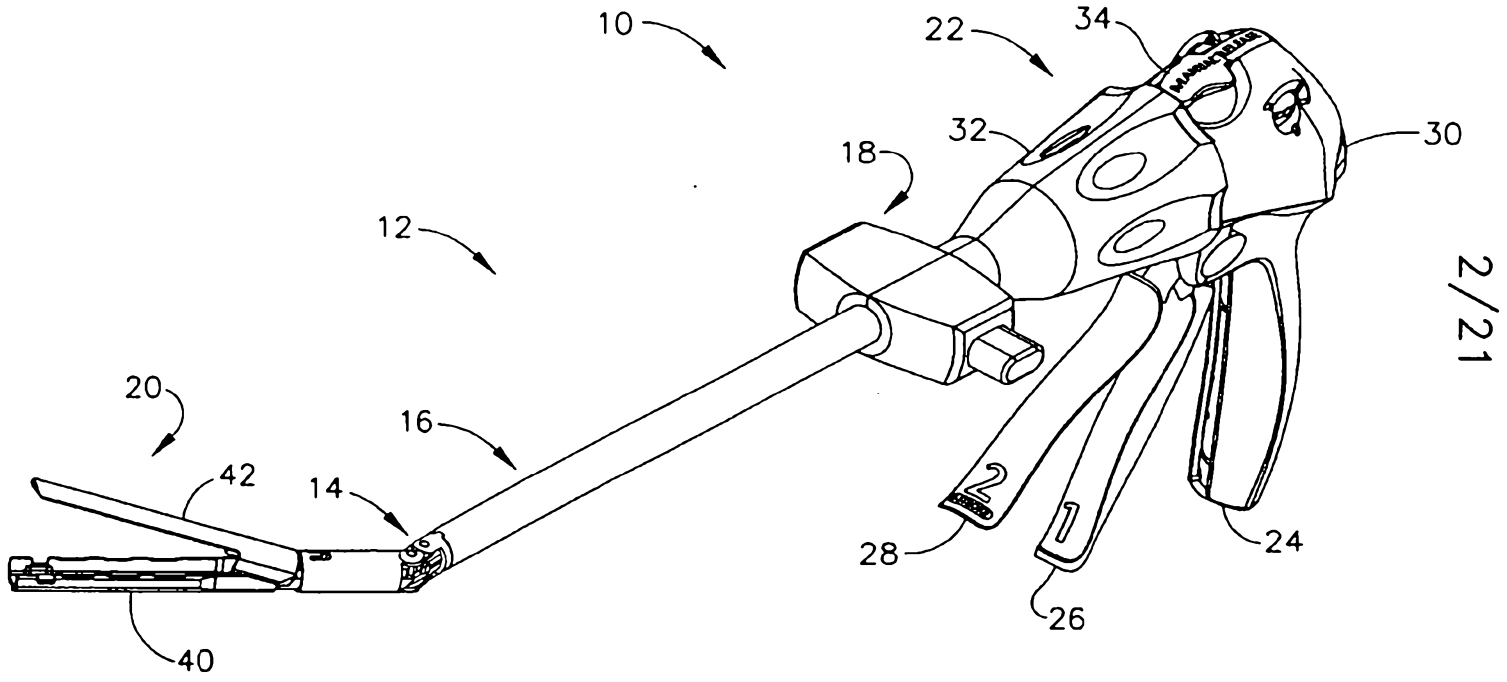

FIG. 2

2006203020 14 Jul 2006

P/00/011
Regulation 3.2

AUSTRALIA

Patents Act 1990

COMPLETE SPECIFICATION
STANDARD PATENT

Invention Title: **Surgical instrument with laterally moved shaft actuator coupled to pivoting articulation joint**

The following statement is a full description of this invention, including the best method of performing it known to us:

2006203020 14 Jul 2006

SURGICAL INSTRUMENT WITH LATERALLY MOVED SHAFT ACTUATOR COUPLED TO PIVOTING ARTICULATION JOINT

Cross Reference to Related Applications

[0001] The present invention claims the benefit of commonly owned U.S. Pat. Appln. 11/061,908 entitled "SURGICAL INSTRUMENT INCORPORATING A FLUID TRANSFER CONTROLLED ARTICULATION MECHANISM" to Kenneth Wales and Chad Boudreaux filed on February 18, 2005, the disclosure of which is hereby incorporated by reference in its entirety.

Field of the Invention

[0002] The present invention relates in general to surgical instruments that are suitable for endoscopically inserting an end effector (e.g., endocutter, grasper, cutter, staplers, clip applier, access device, drug/gene therapy delivery device, and an energy device using ultrasound, RF, laser, etc.) to a surgical site, and more particularly to such surgical instruments with an articulating shaft.

Background of the Invention

[0003] Endoscopic surgical instruments are often preferred over traditional open surgical devices since a smaller incision tends to reduce the post-operative recovery time and complications. Consequently, significant development has gone into a range of endoscopic surgical instruments that are suitable for precise placement of a distal end effector at a desired surgical site through a cannula of a trocar. These distal end effectors engage the tissue in a number of ways to achieve a diagnostic or therapeutic effect (e.g., endocutter, grasper, cutter, staplers, clip applier, access device, drug/gene therapy delivery device, and energy device using ultrasound, RF, laser, etc.).

[0004] Positioning the end effector is constrained by the trocar. Generally, these endoscopic surgical instruments include a long shaft between the end effector and a handle portion manipulated by the clinician. This long shaft enables insertion to a desired depth and rotation about the longitudinal axis of the shaft, thereby positioning

2006203020 14 Jul 2006

the end effector to a degree. With judicious placement of the trocar and use of graspers, for instance, through another trocar, often this amount of positioning is sufficient. Surgical stapling and severing instruments, such as described in U.S. Pat. No. 5,465,895, are an example of an endoscopic surgical instrument that successfully positions an end effector by insertion and rotation.

[0005] More recently, U.S. Pat. Serial No. 10/443,617, "SURGICAL STAPLING INSTRUMENT INCORPORATING AN E-BEAM FIRING MECHANISM" to Shelton IV et al., filed on 20 May 2003, which is hereby incorporated by reference in its entirety, describes an improved "E-beam" firing bar for severing tissue and actuating staples. Some of the additional advantages include affirmatively spacing the jaws of the end effector, or more specifically a staple applying assembly, even if slightly too much or too little tissue is clamped for optimal staple formation. Moreover, the E-beam firing bar engages the end effector and staple cartridge in a way that enables several beneficial lockouts to be incorporated.

[0006] Depending upon the nature of the operation, it may be desirable to further adjust the positioning of the end effector of an endoscopic surgical instrument. In particular, it is often desirable to orient the end effector at an axis transverse to the longitudinal axis of the shaft of the instrument. The transverse movement of the end effector relative to the instrument shaft is conventionally referred to as "articulation". This is typically accomplished by a pivot (or articulation) joint being placed in the extended shaft just proximal to the staple applying assembly. This allows the surgeon to articulate the staple applying assembly remotely to either side for better surgical placement of the staple lines and easier tissue manipulation and orientation. This articulated positioning permits the clinician to more easily engage tissue in some instances, such as behind an organ. In addition, articulated positioning advantageously allows an endoscope to be positioned behind the end effector without being blocked by the instrument shaft.

[0007] Approaches to articulating a surgical stapling and severing instrument tend to be complicated by integrating control of the articulation along with the control of closing the end effector to clamp tissue and fire the end effector (i.e., stapling and severing) within the small diameter constraints of an endoscopic instrument. Generally, the

three control motions are all transferred through the shaft as longitudinal translations. For instance, U.S. Pat. No. 5,673,840 discloses an accordion-like articulation mechanism ("flex-neck") that is articulated by selectively drawing back one of two connecting rods through the implement shaft, each rod offset respectively on opposite sides of the shaft centerline. The connecting rods ratchet through a series of discrete positions.

[0008] Another example of longitudinal control of an articulation mechanism is U.S. Pat. No. 5,865,361 that includes an articulation link offset from a camming pivot such that pushing or pulling longitudinal translation of the articulation link effects articulation to a respective side. Similarly, U.S. Pat. No. 5,797,537 discloses a similar rod passing through the shaft to effect articulation.

[0009] In co-pending and commonly owned U.S. Patent Application Ser. No. 10/615,973 "SURGICAL INSTRUMENT INCORPORATING AN ARTICULATION MECHANISM HAVING ROTATION ABOUT THE LONGITUDINAL AXIS" to Frederick E. Shelton IV et al, the disclosure of which is hereby incorporated by reference in its entirety, a rotational motion is used to transfer articulation motion as an alternative to a longitudinal motion.

[0010] While these mechanically communicated articulation motions have successfully enabled an endoscopic surgical stapling and severing instrument to articulate, development trends pose numerous challenges and barriers to entry into the market. Conflicting design objects include a shaft of as small a diameter as possible to reduce the size of the surgical opening yet with sufficient strength to perform the several motions (e.g., closing, firing, articulation, rotation, etc.). In addition, transferring sufficient force without binding and other frictional problems imposes design constraints that limit desirable features and reliability.

[0011] Consequently, a significant need exists for an articulating surgical instrument that incorporates an articulation mechanism that employs an articulation force that may be incorporated within the close confines thereof without interfering with the firing and closing motions.

2006203020 13 Feb 2012

Brief Summary of the Invention

[0012] The invention overcomes the above-noted and other deficiencies of the prior art by providing a surgical instrument having an articulating shaft attached between a handle and an end effector that uses a laterally sliding member in the proximal portion of the shaft that acts against a pivoting feature of the end effector. Laterally moving actuators on opposing sides of the laterally sliding member control the pivoting to each side. This laterally moving member presents a large longitudinal surface area to act upon differentially, advantageously achieving a desired force to articulate within close confines of an elongate shaft suitable for insertion through a cannula of a trocar for endoscopic or laparoscopic surgical procedures.

[0013] In one aspect of the invention, a surgical instrument utilizes an electromagnet positioned in a lateral recess proximate to a ferromagnetic target that is part of the sliding bar. Control circuitry selectively activates the electromagnet to position the slide bar for articulating the end effector.

[0014] In another aspect of the invention, a surgical instrument utilizes an articulation control having differential, longitudinally moving members that move within an elongate shaft on each side of the slide bar that mechanically actuate differentially against the slide bar to effect lateral position thereof, and thus cause articulation of an end effector.

[0014a] In one embodiment there is provided a surgical instrument, comprising: an end effector including a proximal camming surface; an elongate shaft including a frame defining a lateral recess aligned with a longitudinal axis; an articulation joint pivotally attaching the end effector to the distal end of the elongate shaft; a slide bar within the lateral recess having a distal end engaged to the proximal camming surface of the end effector, wherein the slide bar defines a longitudinal axis, wherein the slide bar is slidable laterally relative to the elongate shaft from a first position to a second position to articulate the end effector, wherein the longitudinal axis of the slide bar is parallel to the longitudinal axis of the elongate shaft when the slide bar is in the first position, wherein the longitudinal axis of the slide bar is also parallel to the longitudinal axis of the elongate shaft when the slide bar is in the second position such that the longitudinal axis of the slide bar is shifted laterally when the slide bar is slid from the first position to the second position; a first actuator positioned in the lateral recess on a selected lateral side of the slide bar; and a handle portion proximally attached to the elongate shaft and operably configured to differentially control the first actuator to laterally slide the slide bar relative to the elongate shaft from the first position to the second position and thereby pivot the articulation joint and end effector.

2006203020 13 Feb 2012

[0014b] In another embodiment there is provided a surgical instrument, comprising: an end effector having a proximal camming surface; an elongate shaft attached to the end effector and including a frame defining a lateral recess aligned with a longitudinal axis; an articulation joint pivotally attaching the end effector to the distal end of the elongate shaft; a slide bar within the lateral recess having a distal end engaged to the proximal camming surface of the end effector, wherein the slide bar defines a longitudinal axis, wherein the slide bar is movable laterally within the elongate shaft; right and left actuators on respective sides of the slide bar in the lateral recess; a handle portion proximally attached to the elongate shaft; and an articulation control operable to differentially position the right and left actuators to shift the longitudinal axis of the slide bar laterally from a first position to a second position, thereby laterally displacing the slide bar to articulate the end effector, wherein the longitudinal axis of the slide bar is parallel to the longitudinal axis of the elongate shaft when the longitudinal axis of the slide bar is in the first position, wherein the longitudinal axis of the slide bar is still parallel to the longitudinal axis of the elongate shaft when the longitudinal axis of the slide bar is in the second position.

[0015] These and other objects and advantages of the present invention shall be made apparent from the accompanying drawings and the description thereof.

[0015a] Reference to any prior art in the specification is not, and should not be taken as, an acknowledgment, or any form of suggestion, that this prior art forms part of the common general knowledge in Australia or any other jurisdiction or that this prior art could reasonably be expected to be ascertained, understood and regarded as relevant by a person skilled in the art.

[0015b] As used herein, except where the context requires otherwise, the term "comprise" and variations of the term, such as "comprising", "comprises" and "comprised", are not intended to exclude other additives, components, integers or steps.

Brief Description of the Figures

[0016] The accompanying drawings, which are incorporated in and constitute a part of this specification, illustrate embodiments of the invention, and, together with the general description of the invention given above and the detailed description of the embodiments given below, serve to explain the principles of the present invention.

2006203020 13 Feb 2012

[0017] FIGURE 1 is a front top perspective view of a surgical stapling and severing instrument shown with an open end effector, or staple applying assembly, and with the staple cartridge removed.

2006203020 14 Jul 2006

[0018] FIGURE 2 is a front top perspective view of the surgical stapling and severing instrument of FIG. 1 with an articulation mechanism actuated by a fluidic actuation control.

[0019] FIGURE 3 is a perspective disassembled view of an elongate shaft and articulation mechanism of the surgical stapling and severing instrument of FIG. 1.

[0020] FIGURE 4 is a perspective disassembled view of distal portions of an implement portion of the surgical stapling and severing instrument of FIG. 1, including the staple applying assembly and articulation mechanism.

[0021] FIGURE 5 is a top perspective view of the staple applying assembly of FIG. 1 and 4 with a lateral half of a staple cartridge removed to expose components driven by a firing motion.

[0022] FIGURE 6 is a front perspective view of an implement portion of the surgical instrument of FIG. 1 with a double pivot closure sleeve assembly and end effector removed to expose a single pivot frame ground articulated by a fluidic articulation mechanism.

[0023] FIGURE 7 is perspective detail view of an alternative articulation joint for the surgical instrument of FIG. 1 depicting a double pivoting closure sleeve assembly at a proximal position with a single pivot frame ground.

[0024] FIGURE 8 is a bottom right perspective exploded view of the alternative articulation joint of FIG. 7 including a double pivoting fixed-wall dog bone link and a frame ground incorporating rail guides for a lateral moving member (T-bar).

[0025] FIGURE 9 is top left perspective exploded view of a further alternative articulation joint for the surgical instrument of FIG. 1, including an alternate solid wall support plate mechanism incorporated into a lower double pivot link to support a firing bar and includes a rail guided laterally moving member (T-bar).

[0026] FIGURE 10 is a top diagrammatic view of an alternate articulation locking mechanism for the surgical instrument of FIG. 1 with a closure sleeve assembly removed to expose a backloading disengaged T-bar for automatic articulation lock engagement and disengagement.

2006203020 14 Jul 2006

[0027] FIGURE 11 is a top diagrammatic view of an additional alternative articulation mechanism for the surgical instrument of FIG. 1, a spring biased rack on a T-bar with locking features that engage due to backloading from an end effector.

[0028] FIGURE 12 is an alternative T-bar and frame ground incorporating lateral guidance for the surgical instrument of FIG. 1.

[0029] FIGURE 13 is yet an additional alternative T-bar and frame ground incorporating lateral guidance for the surgical instrument of FIG. 1.

[0030] FIGURE 14 is a left top perspective disassembled view of an alternative articulation mechanism including a double pivoting frame assembly and single pivoting closure sleeve assembly for the surgical instrument of FIG. 1.

[0031] FIGURE 15 is a left bottom perspective view of the alternative articulation mechanism of FIG. 14.

[0032] FIGURE 16 is a diagram of a laterally moving fluidic articulation mechanism with rack and gear segment pivoting depicted in a nonarticulated state.

[0033] FIGURE 17 is cross section front view in elevation of the fluidic articulation mechanism of FIG. 16 taken along lines 17-17.

[0034] FIGURE 18 is a diagram of the laterally moving fluidic articulation mechanism with a rack and gear segment pivoting depicted in an articulated state.

[0035] FIGURE 19 is cross section front view in elevation of the fluidic articulation mechanism of FIG. 18 taken along lines 19-19.

[0036] FIGURE 20 is a top diagrammatic view of a surgical instrument articulated by at least one longitudinally moving member that laterally cams a slide bar, which in turn articulates an end effector.

[0037] FIGURE 21 is a top diagrammatic view of the surgical instrument of FIG. 20 in an articulated state.

[0038] FIGURE 22 is front cross section view in elevation of an alternative rotary link mechanical control system for a surgical instrument of FIGS. 16 or 20 for laterally translating respectively a T-bar or slide bar, depicted in an unarticulated state.

2006203020 14 Jul 2006

[0039] FIGURE 23 is a front cross section view in elevation of the alternative rotary link mechanical control system of FIG. 22 in an articulated state.

[0040] FIGURE 24 is a top diagrammatic view of a surgical instrument having a slide bar laterally positioned by a pair of buckling members, each with a longitudinally adjustable proximal endpoint, to articulate an end effector.

[0041] FIGURE 25 is a top diagrammatic view of the surgical instrument of FIG. 24 depicted in an articulated state.

[0042] FIGURE 26 is a top diagrammatic view of a surgical instrument having an electromagnetic lateral articulation control mechanism.

[0043] FIGURE 27 is a top diagrammatic view of the surgical instrument of FIG. 26 in an articulated state.

Detailed Description of the Invention

Overview of articulating shaft.

[0044] Turning to the Drawings, wherein like numerals denote like components throughout the several views, FIG. 1 depicts a surgical instrument, which in the illustrative versions is more particularly a surgical stapling and severing instrument 10, that is capable of practicing the unique benefits of the present invention. In particular, the surgical stapling and severing instrument 10 is sized for insertion, in a nonarticulated state as depicted in FIG. 1, through a trocar cannula passageway to a surgical site in a patient (not shown) for performing a surgical procedure. Once an implement portion 12 is inserted through a cannula passageway, an articulation mechanism 14 incorporated into a distal portion of an elongate shaft 16 of the implement portion 12 may be remotely articulated, as depicted in FIG. 2, by an articulation control 18. An end effector, depicted in the illustrative version as a staple applying assembly 20, is distally attached to the articulation mechanism 14. Thus, remotely articulating the articulation mechanism 14 thereby articulates the staple applying assembly 20 from a longitudinal axis of the elongate shaft 16. Such an angled position may have advantages in approaching tissue from a desired angle for severing and stapling, approaching tissue otherwise obstructed by other organs and

2006203020 14 Jul 2006

tissue, and/or allowing an endoscope to be positioned behind and aligned with the staple applying assembly 20 for confirming placement.

Handle.

[0045] The surgical and stapling and severing instrument 10 includes a handle portion 22 proximally connected to the implement portion 12 for providing positioning, articulation, closure and firing motions thereto. The handle portion 22 includes a pistol grip 24 toward which a closure trigger 26 is pivotally and proximally drawn by the clinician to cause clamping, or closing, of the staple applying assembly 20. A firing trigger 28 is farther outboard of the closure trigger 26 and is pivotally drawn by the clinician to cause the stapling and severing of tissue clamped in the staple applying assembly 20. Thereafter, a closure release button 30 is depressed to release the clamped closure trigger 26, and thus the severed and stapled ends of the clamped tissue. The handle portion 22 also includes a rotation knob 32 coupled for movement with the elongate shaft 16 to rotate the shaft 16 and the articulated staple applying assembly 20 about the longitudinal axis of the shaft 16. The handle portion 22 also includes a firing retraction handle 34 to assist in retracting a firing mechanism (not depicted in FIGS. 1-2) should binding occur, so that opening of the staple applying assembly 20 may occur thereafter.

[0046] It will be appreciated that the terms "proximal" and "distal" are used herein with reference to a clinician gripping a handle of an instrument. Thus, the surgical stapling assembly 20 is distal with respect to the more proximal handle portion 22. It will be further appreciated that for convenience and clarity, spatial terms such as "vertical" and "horizontal" are used herein with respect to the drawings. However, surgical instruments are used in many orientations and positions, and these terms are not intended to be limiting and absolute.

[0047] An illustrative multi-stroke handle portion 22 for the surgical stapling and severing instrument 10 of FIGS. 1-2 is described in greater detail in the co-pending and commonly-owned U.S. patent applications Serial No. 11/052,632, "MULTI-STROKE MECHANISM WITH AUTOMATIC END OF STROKE RETRACTION", to Jeffrey S. Swayze et al., and Serial No. 10/674,026, entitled "SURGICAL STAPLING INSTRUMENT INCORPORATING A MULTISTROKE FIRING

2006203020 14 Jul 2006

POSITION INDICATOR AND RETRACTION MECHANISM" to Swayze and Shelton IV, the disclosures of both of which are hereby incorporated by reference in their entirety, with additional features and variation as described herein. While a multi-stroke handle portion 22 advantageously supports applications with high firing forces over a long distance, applications consistent with the present invention may incorporate a single firing stroke, such as described in co-pending and commonly owned U.S. patent application "SURGICAL STAPLING INSTRUMENT HAVING SEPARATE DISTINCT CLOSING AND FIRING SYSTEMS" to Frederick E. Shelton IV, Michael E. Setser, and Brian J. Hemmelgarn, Ser. No. 10/441,632, the disclosure of which is hereby incorporated by reference in its entirety.

Implement Portion (Articulating Elongate Shaft And Staple Applying Assembly).

[0048] In FIGS. 3-5, the implement portion 12 advantageously incorporates the multiple actuation motions of longitudinal rotation, articulation, closure and firing within a small diameter suitable for endoscopic and laparoscopic procedures. The staple applying assembly 20 ("end effector") has a pair of pivotally opposed jaws, depicted as an elongate channel 40 with a pivotally attached anvil 42 (FIGS. 1-2, 4-5). Closure and clamping of the anvil 42 to the elongate channel 40 is achieved by longitudinally supporting the elongate channel 40 with a frame assembly 44 (FIG. 3) rotatingly attached to the handle portion 22 over which a double pivot closure sleeve assembly 46 longitudinally moves to impart a closing and opening respectively to a distal and proximal motion to the anvil 42, even with the staple applying assembly 20 articulated as in FIG. 2.

[0049] With particular reference to FIG. 3, the frame assembly 44 includes a single pivot frame ground 48 whose proximal end is engaged to the rotation knob 32, with a right half shell 50 thereon shown in FIG. 3. It should be appreciated that a proximal end of the closure sleeve assembly 46, specifically of a closure straight tube 52, encompasses the proximal end of the frame ground 48, passing further internally to the handle portion 22 to engage closure components (not shown) that longitudinally translate the closure sleeve assembly 46. A circular lip 54 at the proximal end of the closure straight tube 52 provides a rotating engagement to such components. Engaging components of the rotation knob 32 pass through a longitudinal slot 56 on a proximal

portion of the straight closure tube 52 to engage an aperture 58 proximally positioned on the frame ground 48. The longitudinal slot 56 is of sufficient length to allow the closure longitudinal translation of the closure sleeve assembly 46 at various rotational angles set by the rotation knob 32 to the closure sleeve assembly 46 and the frame ground 48.

[0050] The elongate shaft 16 supports the firing motion by receiving a firing rod 60 that rotatingly engages firing components of the handle portion 22 (not shown). The firing rod 60 enters a proximal opening 62 along the longitudinal centerline of the frame ground 48. The distal portion of the frame ground 48 includes a firing bar slot 64 along its bottom that communicates with the proximal opening 62. A firing bar 66 longitudinally translates in the firing bar slot 64 and includes an upwardly projecting proximal pin 68 that engages a distal end 70 of the firing rod 60.

[0051] The elongate shaft 16 supports articulation by incorporating a rectangular reservoir cavity 72, one lateral portion depicted in a distal portion of the rotation knob 32. A bottom compartment 74 that resides within the rectangular reservoir cavity 72 has laterally spaced apart left and right baffles 76, 78. An articulation actuator 80 slides laterally overtop of the bottom compartment 74, its downward laterally spaced left and right flanges 82, 84, which are outboard of the baffles 76, 78, each communicating laterally to left and right push buttons 86, 88 that extend outwardly from the respective shell halves of the rotation knob 32. The lateral movement of the articulation actuator 80 draws left and right flanges 82, 84 nearer and farther respectively to the left and right baffles 76, 78, operating against left and right reservoir bladders 90, 92 of a fluidic articulation system 94, each bladder 90, 92 communicating respectively and distally to left and right fluid conduits or passageways 96, 98 that in turn communicate respectively with left and right actuating bladders 100, 102. The latter oppose and laterally pivot a slide bar, depicted as a T-bar 104, of the articulation mechanism 14.

[0052] The frame assembly 44 constrains these fluidic actuations by including a top and distal recessed table 106 of the frame ground 48 upon which resides the fluid passages 96, 98 and actuating bladders 100, 102. The T-bar 104 also slidingly resides upon the recessed table 106 between the actuating bladders 100, 102. Proximal to the T-bar

104, a raised barrier rib 108 is aligned thereto, serving to prevent inward expansion of the fluid passages 96, 98. The frame assembly 44 has a rounded top frame cover (spacer) 110 that slides overtop of the frame ground 48, preventing vertical expansion of the fluid passages 96, 98 and actuating bladders 100, 102, as well as constraining any vertical movement of the T-bar 104. In particular, the frame cover 110 includes features that enable it to also provide an articulation locking member 111, described in greater detail below as part of an articulation locking mechanism 113.

[0053] A distal end ("rack") 112 of the T-bar 104 engages to pivot a proximally directed gear segment 115 of an articulated distal frame member 114 of the articulation mechanism 14. An articulated closure tube 117 encompasses the articulated frame member 14 and includes a horseshoe aperture 118 that engages the anvil 42. A double pivoting attachment is formed between the closure straight tube 52 and articulating closure ring 116 over the articulation mechanism 14, allowing longitudinal closure motion even when the articulation mechanism 14 is articulated. In particular, top and bottom distally projecting pivot tabs 119, 120 on the closure straight tube 52 having pin holes 122, 124 respectively are longitudinally spaced away from corresponding top and bottom proximally projecting pivot tabs 126, 128 on the articulating closure ring 116 having pin holes 130, 132 respectively. An upper double pivot link 134 has longitudinally spaced upwardly directed distal and aft pins 136, 138 that engage pin holes 130, 122 respectively and a lower double pivot link 140 has longitudinally spaced downwardly projecting distal and aft pins 142, 144 that engage pin holes 132, 124 respectively.

[0054] With particular reference to FIG. 4, the articulating closure ring 116 is shown for enhanced manufacturability to include a short tube 146 attached to an articulating attachment collar 148 that includes the proximally projecting pivot tabs 126, 128. Similarly, the straight closure tube 52 is assembled from a long closure tube 150 that attaches to an aft attachment collar 152 that includes the distally projecting pivot tabs 119, 120. The horseshoe aperture 118 in the short closure tube 146 engages an upwardly projecting anvil feature 154 slightly proximal to lateral pivot pins 156 that engage pivot recesses 158 inside of the elongate channel 40.

2006203020 14 Jul 2006

[0055] In FIGS. 3, 6, a vertical distal pin hole 169 formed in the frame ground 48 receives a frame pivot pin 171 that pivots within the distal frame member 114.

[0056] The illustrative version of FIG. 4 includes a dog bone link 160 whose proximal pin 157 pivotally attaches to the frame ground 48 in a frame hole 161 and whose distal pin 159 rigidly attaches to a proximal undersurface 162 of the articulating frame member 114, thereby providing pivotal support there between. A bottom longitudinal knife slot 163 in the dog bone link 160 guides an articulating portion of the firing bar 66. The articulating frame member 114 also includes a bottom longitudinal slot 164 for guiding a distal portion of the firing bar 66.

Staple Applying Apparatus (End Effector).

[0057] With reference to FIGS 4-5, the firing bar 66 distally terminates in an E-beam 165 that includes upper guide pins 166 that enter an anvil slot 168 in the anvil 42 to verify and assist in maintaining the anvil 42 in a closed state during staple formation and severing. Spacing between the elongate channel 40 and anvil 42 is further maintained by the E-beam 165 by having middle pins 170 slide along the top surface of the elongate channel 40 while a bottom foot 172 opposingly slides along the undersurface of the elongate channel 40, guided by a longitudinal opening 174 in the elongate channel 40. A distally presented cutting surface 176 of the E-beam 165, which is between the upper guide pins 166 and middle pins 170, severs clamped tissue while the E-beam 165 actuates a replaceable staple cartridge 178 by distally moving a wedge sled 180 that causes staple drivers 182 to cam upwardly driving staples 184 out of upwardly open staple holes 186 in a staple cartridge body 188, forming against a staple forming undersurface 190 of the anvil 42. A staple cartridge tray 192 encompasses from the bottom the other components of the staple cartridge 178 to hold them in place. The staple cartridge tray 192 includes a rearwardly open slot 194 that overlies the longitudinal opening 174 in the elongate channel 40, thus the middle pins 170 pass inside of the staple cartridge tray 192.

[0058] The staple applying assembly 20 is described in greater detail in co-pending and commonly-owned U.S. Patent Application Ser. No. 10/955,042, "ARTICULATING SURGICAL STAPLING INSTRUMENT INCORPORATING A TWO-PIECE E-BEAM FIRING MECHANISM" to Frederick E. Shelton IV, et al., filed 30

September 2004, the disclosure of which is hereby incorporated by reference in its entirety.

Articulation Locking Mechanism.

[0059] In FIGS. 3-4, and 6-8, the articulation locking mechanism 113 is advantageously incorporated to maintain the staple applying assembly 20 at a desired articulation angle. The articulation locking mechanism 113 reduces loads on the left and right actuating bladders 100, 102. In particular, a compression spring 202 (FIG. 3) is proximally positioned between a proximal end 204 of the articulation locking member 111 and the handle portion 22, biasing the articulation locking member 111 distally. With particular reference to FIG. 4, two parallel slots 206, 208 at a distal end 210 of the articulation locking member 111 receive respectively upwardly projecting guide ribs 212, 214 on the frame ground 48. The guide ribs 212, 214 are longitudinally shorter than the parallel slots 206, 208 allowing a range of relative longitudinal travel. Thereby, with particular reference to FIG. 8, selective abutting engagement of a distal frictional surface, depicted as a toothed recess 216 distally projecting from the articulation locking member 111, is engaged to a corresponding locking gear segment 217 in a brake plate 218 received into a top proximal recess 220 of the articulating frame member 114. Distal and proximal holes 221, 222 in the brake plate 218 receive distal and proximal pins 223, 224 that upwardly project from the top proximal recess 220.

[0060] With particular reference to FIG. 6, the elongate shaft 16 is depicted in an articulated position with the closure sleeve assembly 46 removed from around the frame assembly 44 and without the elongate channel 40 and anvil 42. Articulation actuator 80 is shown moved laterally to the left to compress right proximal reservoir bladder 90 and expanded distal right actuation bladder 100 moving T-bar 104 left to the position shown. Thus, lateral movement of the articulation actuator 80 articulates the distal frame 114 clockwise about the single pivot frame ground 48 as shown. The articulation actuator 80 advantageously also automatically engages and disengages the articulation locking mechanism 113. In particular, a toothed detent surface 225 along a proximal top surface of the articulation actuator 80 receives a downwardly projecting locking pin 226 from the proximal end 204 of the articulation locking

member 111. The engagement of the locking pin 226 within the root of the toothed detent surface 225 provides sufficient distal movement of the articulation locking member 111 for locking engagement of the locking gear segment 217 in the brake plate 218. Lateral movement by an operator of the articulation actuator member 80 proximally urges the locking pin 226 proximally, and thus disengages the articulation locking member 111 from the brake plate 218. When the operator releases the articulation actuator 80, the locking pin 226 is urged by the compression spring 202 into the adjacent detent in detent surface 225 to lock the locking mechanism 111, and thereby the staple applying assembly 20.

[0061] In FIG. 10, an alternate locking mechanism 2000 of an articulation mechanism 2002 of a surgical instrument 2004, is normally unlocked and is activated by cocking a laterally moving T-bar 2006 due to back loading. A slot 2008 is located in a frame ground 2010 to receive and guide a rib 2012 extending down from the T-bar 2006. A slender longitudinal section 2014, which is orthogonally attached to the rib 2012 deflects if an end effector 2016 is backloaded. For instance, as the end effector 2016 is forced to the right as depicted at arrow 2018, its proximal gear segment 2020 acts upon a rack 2022 of the T-bar 2006, imparting a nonorthogonal backdriving force, as depicted at arrow 2024. Thus, the slender longitudinal section 2014 bends, cocking rib 2012 in slot 2008. This cocking produces opposing binding forces, as depicted by arrows 2026, 2028, that lock the T-bar 2006 and prevent further articulation. Unlocking occurs when actuation of the articulation bladders uncocks the laterally moving T-bar 2006. Thereafter, the rib 2012 may assist in guiding the T-bar 2006.

[0062] In FIG. 11, yet an additional articulation locking mechanism 2100 for a surgical instrument 2102 is depicted that is normally unlocked and activated by the proximal force vector from the 20 degree pressure angle from gear teeth 2104 of an end effector 2106 and rack teeth 2108 of a T-bar 2110. When the end effector 2106 is backloaded, as depicted by nonorthogonal arrow 2112, the longitudinal vector of the pressure angle, depicted as arrow 2114, moves the T-bar 2110 proximally. This longitudinal force vector is applied to a stiff spring 2118 behind a rack 2120 of the T-bar 2110. When the spring 2118 deflects as T-bar 2110 moves proximally, locking teeth 2126 projecting proximally from the rack 2120 are brought into engagement while locking elements 2122 distally and laterally aligned on a ground frame 2124.The locking teeth

2006203020 14 Jul 2006

2126 and locking elements 2122 disengage when the proximal force vector 2114 is reduced or eliminated by removing the back loading of the end effector 2106 and allowing T-bar 2110 to move distally from urging from spring 2118.

Double Pivot Closure Sleeve and Single Pivot Frame Ground Combination.

[0063] With reference to FIGS. 3-4 and 7, the implement portion 12 advantageously incorporates the double pivot closure sleeve assembly 46 that longitudinally translates over and encompasses a single pivot frame ground 48. These mechanisms and their operation will now be described in further detail. With particular reference to FIG. 7, the articulation mechanism 14 is depicted in an articulated state with the closure sleeve assembly 46 retracted proximally to an anvil open state. With the anvil 42 open, actuation of the articulation control 18 causes the articulated closure ring 116 to pivot about the upwardly directed distal pin 136 and downwardly directed distal pin 142 respectively of the upper and lower double pivot closure links 134, 140. The frame ground 48 pivots around a single pin, depicted as the frame pivot pin 171 (FIG. 3) that joins frame ground 48 to distal frame member 114. With the anvil 42 open, the frame pivot pin 171 of frame ground 48 is aligned with the distal most position of upper and lower double pivot links 134, 140 of the closure sleeve assembly 46. This positioning allows easy pivoting and rotation of the staple applying assembly 20 while the anvil 42 is open. When the closure sleeve assembly 46 is moved distally to pivot anvil 42 closed, the closure straight tube 52 moves distally about frame ground 48 and the articulated closure ring 116 moves distally along the articulated distal frame member 114 axis as urged by pivot links 134, 140. Dual pivoting pins 136, 138 and 142, 144 on links 134, 140 facilitate engagement with closure straight tube 52 and articulated closure ring 116 as they are urged towards the distal closure position when the device is articulated (not shown). At the distal closure position, the frame pivot pin 171 is vertically aligned with proximal pivot pins 138, 144 at full articulation or may fall at any point between distal pins 136, 142 and proximal pins 138, 144 while working effectively.

Solid Firing Bar Support.

[0064] In FIG. 8, the articulation mechanism 14 of FIG. 7 is partially exploded and viewed from the bottom, showing a solid wall firing bar support design (dog bone link

160) of FIG 4 that offers advantages over conventional flexible support plates. Support plates are used to bridge the gap and guide and support the firing bar 66 through a single frame ground pivot articulation joint 1801. Flexible firing bar supports are known, but the incorporation of solid wall firing bar supports such as those shown in FIGS. 4, 8 and 9 offer unique advantages. Referring now to FIG. 8, frame ground 48 includes a frame knife slot 1802 that runs along the bottom of frame ground 48 and a distal knife slot 164 that runs along the bottom of the articulating distal frame member 114 for the sliding reception of the firing bar 66 (not shown) therein. Frame ground 48 is described above and includes a direct single pivotal connection at frame pivot pin 171 with the distal frame member 114. The fixed wall dog bone link 160 that is rotatably connected on proximal pin end 157 and movably connected on distal pin end 159 includes left and right lateral guides 1818, 1820, defining therebetween a guidance slot 1822 for sliding passage of a firing bar 66 (FIG. 4).

[0065] Thus, to bridge the gap between frame ground 48 and the distal frame member 114, the fixed wall pivoting dog bone link 160 is pivotally attached to frame ground 48 and is slidingly attached to frame member 114. Proximal pin 157 of the pivoting dog bone 160 is pivotally received in a bore 1824 in frame ground 48, enabling pivotal dog bone 160 to pivot about bore 1824. The distal pin 159 extends upwards from pivotal dog bone 160 and is slidingly received in a slot 1826 in distal frame member 114. Articulation of staple applying assembly 20 to an angle such as 45 degrees from the longitudinal axis pivots pivoting dog bone 116 in bore 1824 at its proximal pin 157 and distal pin 159 slides into slot 1826 formed in the distal frame member 114 to bend firing bar 66 to two spaced-apart angles that are half of the angle of the staple applying assembly 20. Unlike previously referenced flexible support plates that bend the firing bar 66 to a 45 degree angle, the fixed wall pivoting dog bone 160 bends the firing bar 66 to two spaced-apart angles such as 22.5 degrees each. Bending the flexible firing bar or bars 66 to half the angle cuts the bend stress in the firing bars 66 to one-half of that found in conventional articulation supports. Reducing the bending stress in the firing bars 66 reduces the possibility of permanently bending or placing a set in the firing bars, reduces the possibility of

2006203020 14 Jul 2006

firing jams, ensures lower firing bar retraction forces, and provides smoother operation of the firing system.

[0066] In FIG. 9, a surgical instrument 1900 includes double closure pivot. Single frame pivot articulation joint 1902 shows an alternate solid wall support plate mechanism 1904 that replaces the lower double pivot link 140 and dog bone link 1812 of FIG. 8. Left and right firing bar supports 1906, 1908 extend upwardly from a lower double pivot link 1910 of a closure sleeve assembly 1912. Clearance 1914 is provided in a frame ground 1916 for the firing bar supports 1906, 1908 to travel as the closure sleeve assembly 1912 moves distally to close the anvil 42 (not shown in FIG. 9) and proximally to open anvil 42. Like the above described pivoting dog bone 160, the alternate lower double pivoting link 1910 also bends and supports the firing bar 66 (not shown in FIG. 9) creating two spaced-apart bend angles that are up to one-half of the bend angle of the staple applying assembly 20.

Lateral Member Guide Mechanisms.

[0067] With further reference to FIG. 9, left and right upward flanges 1918, 1920 on the frame ground 1916 include distal and proximal lateral pin guides 1921, 1923 that pass laterally through holes 1923, 1924 in a T-bar 1926 assisting in minimizing binding in an articulation mechanism 1928. As another example, in FIG. 7, the T-bar 104 advantageously includes a dovetail lateral guide 1930 that laterally slides within a dovetail channel 1932 formed therein. As yet a further example, in FIG. 12, a raised rib 1934 on a frame ground 1936 is received within a rectangular slot 1938 formed in a T-bar 1940. To further facilitate non-binding lateral translation, distal and proximal lateral bearing tracks each include a respective plurality of ball bearings 1946, 1948. As yet a further example, in FIG. 13, a plurality of frame lateral grooves 1950-1954 are formed in a frame ground 1956 with corresponding T-bar lateral grooves 1958-1962 in a T-bar 1964. Slide rollers 1966-1970 reside trapped within respective pairs of lateral grooves 1950/1958, 1952/1960, 1954/1962. These are by no means an exhaustive list of lateral guidance members that prevent unwanted cocking or rotation of the T-bar 1940.

Double Pivot Frame Ground and Single Pivot Closure Combination.

[0068] In FIGS. 14-15, an alternate frame ground and closure mechanism 2200 is incorporated into a surgical instrument 2202 that includes double pivoting frame assembly 2204. In particular, a frame ground 2206 is connected to distal frame member 2208 by a dual pivot frame dog bone 2210 having a proximal pivot pin 2212 pivotally engaging a proximal bore 2214 in frame ground 2206 and a distal pivot pin 2216 engaging a distal bore 2218 of distal frame member 2208. A guidance slot 2220 is located on the underside of dog bone 2210 for the guidance of a firing bar 66 (not shown in FIGS. 14-15) therein. Knife slot 2222 is located in distal frame member 2208. As shown, articulation of a closure ring 2230 of a closure sleeve assembly 2224 to a forty-five (45) degree angle articulates distal frame member 2208 to a forty-five (45) degree angle and articulates frame dog bone 2210 to half that angle. Consequently, firing bar 66 is subjected to the two shallow half bends that are spaced apart and obtains all the benefits listed above.

[0069] Outermost closure sleeve assembly 2224 is different in that only one pivot axis of the double pivoting design of the frame assembly 2204 accommodates its longitudinal closure motion. As shown, a closure tube shaft 2226 has a clevis 2228 at a distal end. Clevis 2228 is pivotally engaged with a closure ring 2230. Closure ring 2230 has a proximal gear 2232 formed at a proximal end and pin 2234 passes through the proximal gear 2232 and pivotally engages an upper tang 2236 of clevis 2228. A lower arm 2238 is pivotally engaged to a lower tang 2240 of clevis 2228 by an aligned pin 2241. Holes 2242 in the clevis 2228 receive lateral guide pins 2243 and slidably attach a T-bar 2244 therein to engage proximal gear 2232 of the closure ring 2230. Thus, this alternate mechanism 2200 uses a reversed single/dual pivot alternate concept from the previously described mechanism. That is, the alternate closure mechanism 2200 has a single pivot and the alternate frame ground has a dual pivot, unlike the previously described dual pivot closure mechanism with a single pivot frame ground.

Laterally Moving Articulation Mechanism.

[0070] In FIGS. 16-19, a laterally moving articulation mechanism 230 is depicted schematically to show lateral motion being used to effect articulation of an end effector 232. Lateral motion is the movement of at least one element toward or away

2006203020 14 Jul 2006

from the longitudinal axis of a surgical device 234. This motion is generally at right angles to the longitudinal axis, which is a horizontal line bisecting the mechanism 230, and does not involve rotational motion or longitudinal motion. Laterally moving articulation mechanisms can be fluid actuated as shown in FIGS. 16-19 or mechanically actuated as shown in FIGS. 20-23.

Laterally Moving Fluid Articulation Mechanism.

[0071] The laterally moving articulation mechanism 230 is shown schematically in FIGS. 16-19 and includes a fluid control system 235 having fluid-filled parallel left and right fluid bladders 236, 238 extending longitudinally therein that move a lateral member or T-bar 240 laterally by the movement of fluids 242. All directions are in reference to the longitudinal axis. Referring to the unarticulated view of FIGS. 16 and 17, the distally located end effector 232 pivots about pin 244 and has a gear segment 246 at a proximal end. Pivot pin 244 is attached to a frame (not shown). A rack 248 at a distal end of the T-bar 240 operably engages gear segment 246. T-bar 240 and rack 248 are laterally moveable along axis A-A. Respective distal portions of the long left and right fluid bladders 236, 238 lie laterally to the laterally moveable T-bar 240 and are laterally constrained within a closure sleeve 250 and vertically constrained by a frame 252 below and a spacer 254 above. In particular, left actuating fluid bladder 236 has left distal actuating bladder 256, left fluid passageway 258, and a left proximal reservoir bladder 260. Right fluid bladder 238 has a right distal actuating bladder 262, right fluid passageway 264, and right proximal reservoir bladder 266. A fixed divider 270 extends from the frame 252 and separates the bladders 260, 266 and the fluid passageways 258, 264. The fixed divider 270 and the closure sleeve 250 constrain the fluid passageways 258, 264 and prevent expansion in the fluid passage sections 258, 264 of the bladders 236, 238. A laterally moveable "C" shaped compression member 272 is included in articulation control mechanism 273 for the compression of one of the proximal reservoir bladders 260, 266 and the articulation of the end effector 232. In addition, other components such as a firing bar 274 passing through a firing bar slot 276 in the frame 252 may be incorporated (FIGS. 17, 19).

[0072] As shown in FIGS. 18, 19, lateral movement of C-shaped compression member 272 to the left compresses right proximal reservoir bladder 266 forcing fluid 242 into

right fluid passageway 264 and right distal actuating bladder 262. As right distal actuating bladder 262 moves T-bar 240 laterally to the left, the left distal actuating bladder 256 is compressed and the end effector 232 is articulated to the right (clockwise as viewed from the top as shown). Compression of the left distal actuating bladder 256 causes fluid 242 to flow proximally through the left fixed fluid passageway 258 and into left proximal reservoir bladder 260. In particular, an attached right wall 280 of the C-shaped compression member 272 moves to the left causing compression of the right proximal reservoir bladder 266. A corresponding movement left of an attached left wall 278 of the C-shaped compression member 272 provides space for the fluid from compressed left actuator bladder 256 as the fluid flows into the expanding left proximal reservoir bladder 260.

[0073] This fluid control system 235 for the articulation mechanism 230 offers at least several advantages. First, the orientation of the actuating bladders 256, 262, proximal to the articulation joint or mechanism 230, allows the use of long bladders 236, 238 and longer T-bars 240 within the surgical device 234. As a fluid-driven system, increasing the output force of the fluid control system 235 may be accomplished in two ways. First, for a fixed fluid area on the T-bar 240, the fluid pressure onto the fixed area may be increased. Second, for a fixed fluid pressure, the fluid contact area on the T-bar 240 may be increased. The first method results in a more compact design and higher system pressures. The second method results in a larger design and lower system pressures. To decrease cost, simplify the design, reduce system stress, and reduce risk of bladder rupture, the illustrative version depicts long distal actuating bladders 256, 262 in an advantageous position proximal to the articulation mechanism 230 within an elongate shaft of the surgical device 234. It is this placement of the bladders 256, 262 that enable the bladders 256, 262 to be long and the articulation output force to be high for a low input pressure.

[0074] Thus, the output force of the articulation mechanism 230 can be increased (for the same input pressure) simply by increasing the pressure contact area of the distal actuating bladders (balloons) 256, 262 on T-bar 240. Pressure contact area increases are restricted to height and length. Since the diameter of conventional endoscopic surgical instruments are fixed at certain diameters to pass through insufflation ports, this limits the height change. Changing the length of the pressure contact area has the

2006203020 14 Jul 2006

greatest effect and enables the lateral output force of the device to be advantageously tuned (by changing length) to meet whatever output force the system requires.

[0075] Fluids used in a laterally moving device can be either compressible or incompressible. As used herein, the term "fluid" comprises liquids, gases, gels, microparticles, and any other material which can be made to flow between a pressure gradient. While any fluid can be used, sterilized solutions such as saline, mineral oil or silicone are especially preferred.

Laterally Moving Mechanical Articulation Mechanism.

[0076] Whereas fluid mechanisms are described above to cause lateral movement and articulation, mechanical mechanisms may accomplish a similar lateral motion as produced by fluid bladders 236, 238. In FIGS. 20-21, an alternate laterally moving articulation mechanism 300 employs a mechanical control system, in particular a longitudinally moving member, to affect lateral motion and articulation for a surgical instrument 301. In the illustrative version, with particular reference to FIG. 20, a laterally moving slide bar 302 has at least one pair of angled left and right cam surfaces 304, 306 extending laterally therefrom on opposite sides of an elongate longitudinal shaft 308. In the illustrative version, another pair of proximal left and right angled cam surfaces 310, 312 are also included. A right longitudinally moving link 314 includes corresponding inwardly directed distal and proximal counter ramped surfaces 316, 318 that register and slidingly engage to distal and proximal right cam surfaces 306, 312 such that distal longitudinal movement of the moving link 312 causes leftward lateral movement of the slide bar 302. It should be appreciated that this ramping contact may be reversed such that distal movement causes rightward movement respectively.

[0077] It should be appreciated that a spring bias (not shown) may be included on the slide bar 302 to urge the slide bar 302 rightward into engagement with the right longitudinally moving link 314 so that the opposite proximal movement of the right longitudinal moving link 314 allows leftward movement of the slide bar 302. Alternatively, in the illustrative version, a left longitudinally moving link 320 includes corresponding inwardly directed distal and proximal counter ramped surfaces 322, 324 that register and slidingly engage to distal and proximal right cam surfaces 304,

310, the latter ramp distally and the former ramp proximally so that distal longitudinal movement of the left longitudinally moving link 320 causes rightward lateral movement of the slide bar 302. It should be appreciated that this ramping contact may be reversed such that proximal movement causes leftward movement. It should be appreciated that the right and left longitudinally moving links 314, 320 and sliding bar 302 are supported within the elongate shaft 308 that allows this longitudinal movement of the former and lateral movement of the latter.

[0078] A distal end of the slide bar 302, depicted as a socket ball 328, is received within a V-shaped cam groove 330 proximally aligned and proximal to a pivot pin 332 of an end effector 334. Thus, in FIG. 21, proximal movement of the right longitudinally moving link 314 and distal movement of the left longitudinally moving link 320 causes rightward movement of the sliding bar 302 with a corresponding rightward movement of the socket ball 328. Thus the V-shaped cam groove 330 is driven rightward, pivoting its most distal end 336 to the left. Alternatively, lateral movement of the slide bar 302 may be converted to articulation of the end effector 334 by the rack and gear engagement described above with respect to FIGS. 16-19. Thus, mechanical systems that use longitudinal movement can be used to provide lateral articulation for the surgical instrument 301.

Rotatable Link.

[0079] In FIGS. 22 and 23, a further alternate articulation mechanism 400 uses a rotatable link 402 to move a lateral member, depicted as laterally moving slide bar 404, to cause articulation for a surgical instrument 406. The laterally moving slide bar 404 may operably engage with a rotary gear or a cammed groove as described above for FIGS. 16 and 20 at a proximal end of an end effector (not shown). Rotatable link 402 may be located below the slide bar 404 with at least one arm 408 extending rotatably transverse to the longitudinal axis therefrom to engage within a socket 410 within the slide bar 404. The slide bar 404 is vertically constrained between a top spacer 412 and a bottom frame 414, the later having a longitudinal trough 416 that receives the rotatable link 402 and accommodates rotation of the arm 408. The spacer 412 and frame 414 are encompassed by a tubular sleeve 418. Rotation of the rotary link 402

moves the arm 408 in an arc and thereby moves the slide bar 404 laterally in the direction of rotation.

Articulation Mechanism Having Opposing Buckling Flexible Members.

[0080] In FIG. 24, a surgical instrument 500 has a slide member 502 aligned along a longitudinal axis of an elongate shaft 504 and allows lateral movement between a left buckling member 506 and a right buckling member 508 and is vertically constrained by a frame and spacer (not shown). Each buckling member 506, 508 has a respective fixed distal attachment 510, 512 and a longitudinally translatable proximal link 514, 516. Respective left and right flexible members 518, 520 inwardly bow in opposition against the slide bar 502, with the amount of lateral intrusion in relation to distal longitudinal movement of their respective proximal link 514, 516. In an unarticulated state shown in FIG. 24, the proximal links 514, 516 are not differentially positioned, and thus a distally projecting tip 522 of the slide member 502 is centered within a V-shaped cam groove 524 that proximally opens relative to a pivot pin 526 of an end effector 528. In FIG. 25, the left proximal link 514 has been distally advanced and the right proximal link 516 has been proximally retracted, causing the slide bar 502 to laterally translate to the right, thereby causing camming of the distally projecting tip 522 against a right portion of the V-shaped cam groove 524 with resultant leftward articulation of the end effector 528 about the pivot pin 526.

Electromagnetic Lateral Articulation Control Mechanism.

[0081] In FIG. 26, a surgical instrument 600 has a distally connected end effector 602 that is selectively articulated in an arc about its pivot pin 604 relative to an elongate shaft 606 by lateral motion of a slide bar 608. In particular, a distal ball 610 of the slide bar 608 engages a V-shaped cam groove 612, opening proximal to the pivot pin 604. The slide bar 608 is vertically constrained within the elongate shaft 606 by a frame and spacer (not shown). Left and right compression springs 614, 616 that are inwardly directed on opposite lateral sides of the slide bar 608 are proximate to a distal end 618 of the elongate shaft 606. These springs 614, 616 provide a centering bias on the slide bar 608 and thus on the end effector 602. Left and right electromagnets 620, 622 on opposing sides of the slide bar 608 are selectively activated to attract a ferrous target 624 integral or affixed to the slide bar 608, thereby

2006203020 14 Jul 2006

selectively displacing the slide bar 608 laterally and effecting articulation of the end effector 602, as depicted in FIG. 27. For simplicity, a longitudinally-aligned coil is depicted, although it should be appreciated that one or more electromagnets may be aligned to produce a magnetic field perpendicular to the slide bar 608, such as a plurality of coils (not shown) aligned along the longitudinal length of the slide bar 608 with each coil having its longitudinal axis aligned with the lateral movement axis of the slide bar 608.

Asymmetric Lateral Articulation Control Mechanism.

[0082] In FIG. 28, a surgical instrument 700 has a distally connected end effector 702 that is selectively articulated in an arc about its pivot pin 704 relative to an elongate shaft 706 by lateral motion of a slide bar 708. In particular, a distal rack 710 of the slide bar 708 engages a gear segment 712, opening proximal to the pivot pin 704. The slide bar 708 is vertically constrained within the elongate shaft 706 by a frame and spacer (not shown). A left plurality of compression springs 714 and a right compression spring 716 that are inwardly directed on opposite lateral sides of the slide bar 708 are proximate to a distal end 718 of the elongate shaft 706. These springs 714, 716 provide an asymmetric centering bias on the slide bar 708 and thus on the end effector 702. Thus a left unactuated space 720 and a right electromagnet 722 on opposing sides of the slide bar 708 selectively create a selective leftward asymmetric bias to overcome the rightward bias of the springs 714 by attracting a ferrous target 724 integral or affixed to the slide bar 708, thereby selectively displacing the slide bar 708 laterally and effecting articulation of the end effector 702, as depicted in FIG. 29. For simplicity, a longitudinally-aligned coil is depicted, although it should be appreciated that one or more electromagnets may be aligned to produce a magnetic field perpendicular to the slide bar 708, such as a plurality of coils (not shown) aligned along the longitudinal length of the slide bar 708 with each coil having its longitudinal axis aligned with the lateral movement axis of the slide bar 708.

[0083] In addition or as an alternative to the rightward bias of springs 714, the slide bar 708 may include a plurality of magnets (e.g., permanent, electromagnetics) 732 such that by reversing the polarity of the right electromagnet 722, the slide bar 708 may be

2006203020 14 Jul 2006

selectively attracted or repulsed. Thus, centering springs 714, 716 may be balance in opposition straightening the end effector 702 when the electromagnet 722 is de-energized.

[0084] As an alternative, it should be appreciated that permanent magnets in the slide bar with permanent magnets aligned on each lateral side to repulse the magnets in the slide bar may advantageously center the slide bar with one or more electromagnets used to overcome the centering bias.

[0085] It should further be appreciated that asymmetric actuation may include a fluid transfer, mechanical camming, buckling member, etc. as described herein on one side of a slide bar with an opposing bias on the other from compression springs and/or permanent magnets. Further, such implementations may further include a locking mechanism.

[0086] As a further addition, locking of the end effector 702 at an angle releative to the elongate shaft 706 may be incorporated similar to implementations described above, such as having an arcing gear segment 734 projecting proximally from the end effector 702, vertically spaced for noninterference with the slide bar 708. A locking bar 736 extending distally from the elongate shaft 706 may be brought slightly proximally out of engagement with the arcing gear segment 734 (FIG. 28) during articulation movement and then distally moved slightly into engagement (FIG. 29) to lock at a desired articulation angle.

[0087] While the present invention has been illustrated by description of several embodiments and while the illustrative embodiments have been described in considerable detail, it is not the intention of the applicant to restrict or in any way limit the scope of the appended claims to such detail. Additional advantages and modifications may readily appear to those skilled in the art.

[0088] What is claimed is:

2006203020 13 Feb 2012

The claims defining the invention are as follows:

1. A surgical instrument, comprising:

an end effector including a proximal camming surface;

an elongate shaft including a frame defining a lateral recess aligned with a longitudinal axis;

an articulation joint pivotally attaching the end effector to the distal end of the elongate shaft;

a slide bar within the lateral recess having a distal end engaged to the proximal camming surface of the end effector, wherein the slide bar defines a longitudinal axis, wherein the slide bar is slidable laterally relative to the elongate shaft from a first position to a second position to articulate the end effector, wherein the longitudinal axis of the slide bar is parallel to the longitudinal axis of the elongate shaft when the slide bar is in the first position, wherein the longitudinal axis of the slide bar is also parallel to the longitudinal axis of the elongate shaft when the slide bar is in the second position such that the longitudinal axis of the slide bar is shifted laterally when the slide bar is slid from the first position to the second position;

a first actuator positioned in the lateral recess on a selected lateral side of the slide bar; and

a handle portion proximally attached to the elongate shaft and operably configured to differentially control the first actuator to laterally slide the slide bar relative to the elongate shaft from the first position to the second position and thereby pivot the articulation joint and end effector.

2. The surgical instrument of claim 1, wherein the first actuator comprises a first longitudinal moving member positioned adjacent in a lateral plane of motion of the slide bar and including a plurality of inwardly directed lateral camming surfaces, the slide bar including a corresponding plurality of outwardly directed lateral camming surfaces, wherein movement of the first longitudinal moving member in a selected one of distal and proximal longitudinal movement causes the slide bar to move laterally away, wherein movement of the first longitudinal moving member in the opposite direction allows movement of the slide bar toward the first longitudinal moving member.

3. The surgical instrument of claim 2, further comprising a second actuator, wherein the second actuator comprises a second longitudinal moving member positioned adjacent in the lateral plane of motion of the slide bar opposite the first longitudinal moving member and including a plurality of inwardly directed lateral camming surfaces, the slide bar including a corresponding plurality of outwardly directed lateral camming surfaces, wherein movement of the second longitudinal moving member in a selected one of distal and proximal longitudinal movement causes

2006203020 13 Feb 2012

the slide bar to move laterally away and wherein movement of the second longitudinal moving member in the opposite direction allows movement of the slide bar toward the second longitudinal moving member.

4. The surgical instrument of claim 1, further comprising a rotatable link aligned in parallel to the slide bar and radially coupled thereto wherein a rotation of the rotatable link imparts a lateral translation to the slide bar.

5. The surgical instrument of claim 1, further comprising:

a second actuator, wherein the first and second actuators comprise respectively first and second buckling members on opposing lateral sides of the slide bar, each buckling member including at least one longitudinally positionable attachment point; and

an articulation control operatively configured to differentially position the at least one longitudinally positionable attachment point of the first and second buckling members.

6. The surgical instrument of claim 1, wherein the first actuator comprises a first electromagnet laterally adjacent to the slide bar wherein the slide bar includes a magnetic target.

7. The surgical instrument of claim 6, further comprising a second actuator, wherein the second actuator comprises a second electromagnet laterally adjacent to the slide bar and opposite of the first electromagnet, the magnetic target comprising a ferrous target.

8. The surgical instrument of claim 6, wherein the slide bar includes a magnet, the first electromagnet operatively configured to selectively produce a positive and a negative magnetic field.

9. The surgical instrument of claim 1, wherein the proximal camming surface of the end effector comprises a gear segment and the distal end of the slide bar comprises a gear rack.

10. The surgical instrument of claim 9, further comprising a locking member in the elongate shaft selectively distally longitudinally translating to engage the gear segment of the end effector locking articulation joint.

11. The surgical instrument of claim 10, further comprising an articulation control, wherein the locking member is distally biased and includes a proximal pin, the articulation control including a toothed surface that cams the proximal pin proximally during actuation and allows the proximal pin

2006203020 13 Feb 2012

to distally move into a corresponding tooth root of the toothed surface when the articulation control stops.

12. The surgical instrument of claim 1, wherein the proximal camming surface of the end effector comprises a proximally directed camming recess that receives the distal end of the slide bar.

13. A surgical instrument, comprising:

an end effector having a proximal camming surface;

an elongate shaft attached to the end effector and including a frame defining a lateral recess aligned with a longitudinal axis;

an articulation joint pivotally attaching the end effector to the distal end of the elongate shaft;

a slide bar within the lateral recess having a distal end engaged to the proximal camming surface of the end effector, wherein the slide bar defines a longitudinal axis, wherein the slide bar is movable laterally within the elongate shaft;

right and left actuators on respective sides of the slide bar in the lateral recess;

a handle portion proximally attached to the elongate shaft; and

an articulation control operable to differentially position the right and left actuators to shift the longitudinal axis of the slide bar laterally from a first position to a second position, thereby laterally displacing the slide bar to articulate the end effector, wherein the longitudinal axis of the slide bar is parallel to the longitudinal axis of the elongate shaft when the longitudinal axis of the slide bar is in the first position, wherein the longitudinal axis of the slide bar is still parallel to the longitudinal axis of the elongate shaft when the longitudinal axis of the slide bar is in the second position.

14. The surgical instrument of claim 13, wherein the left and right actuators comprise buckling members.

15. The surgical instrument of claim 13, wherein the slide bar further comprises lateral camming surfaces, the left and right actuators further comprise opposing camming members positioned to differentially contact the slide bar.

16. A surgical instrument of claim 1 or 13 substantially as hereinbefore described with reference to any one of the accompanying drawings.

2006203020 14 Jul 2006

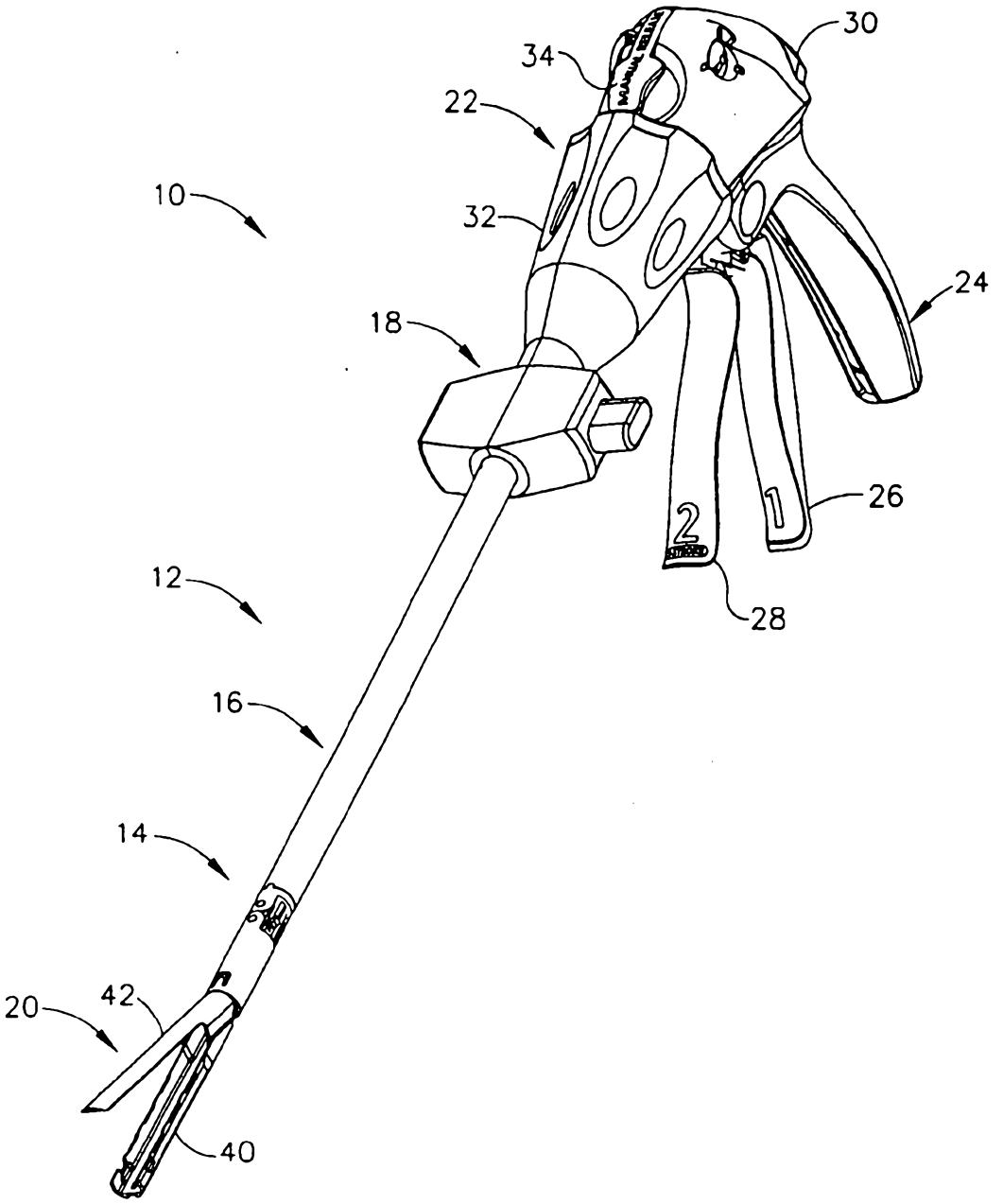

FIG. 1

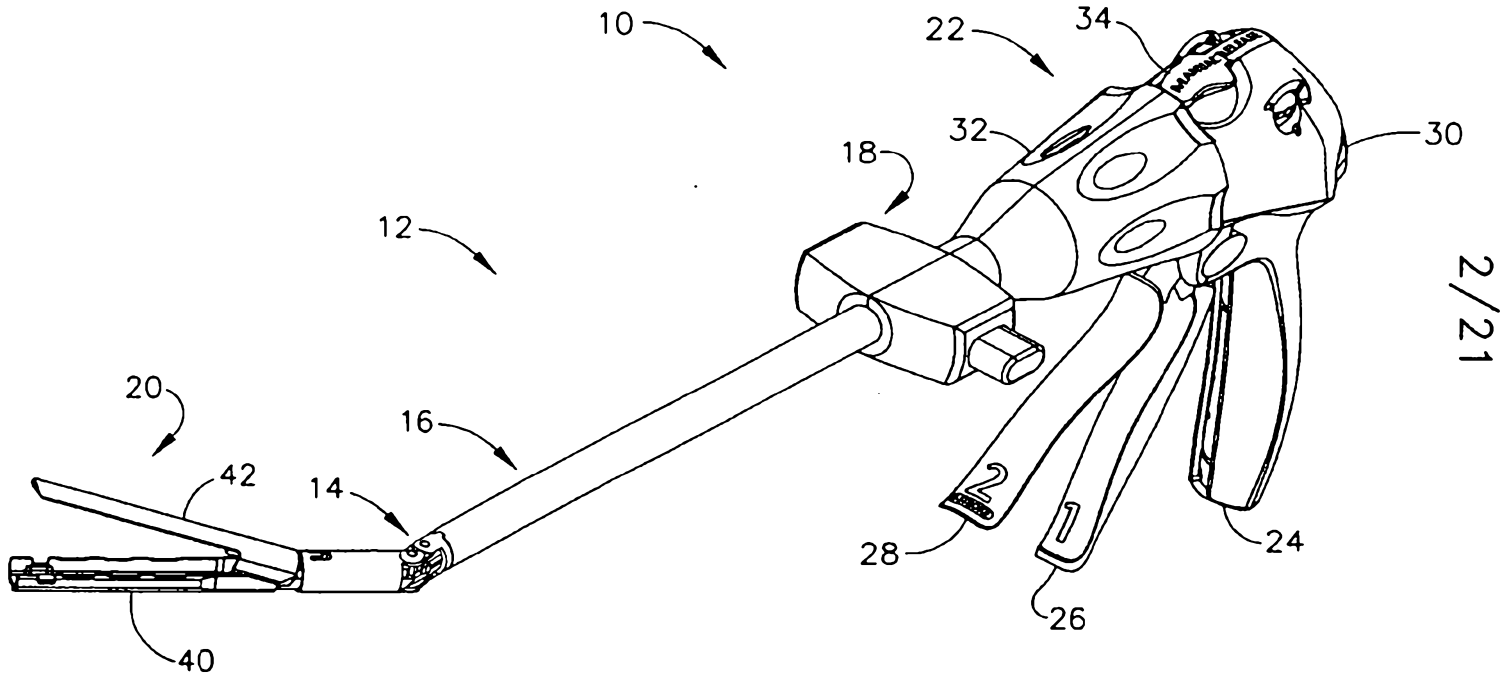

FIG. 2

2006203020 14 Jul 2006

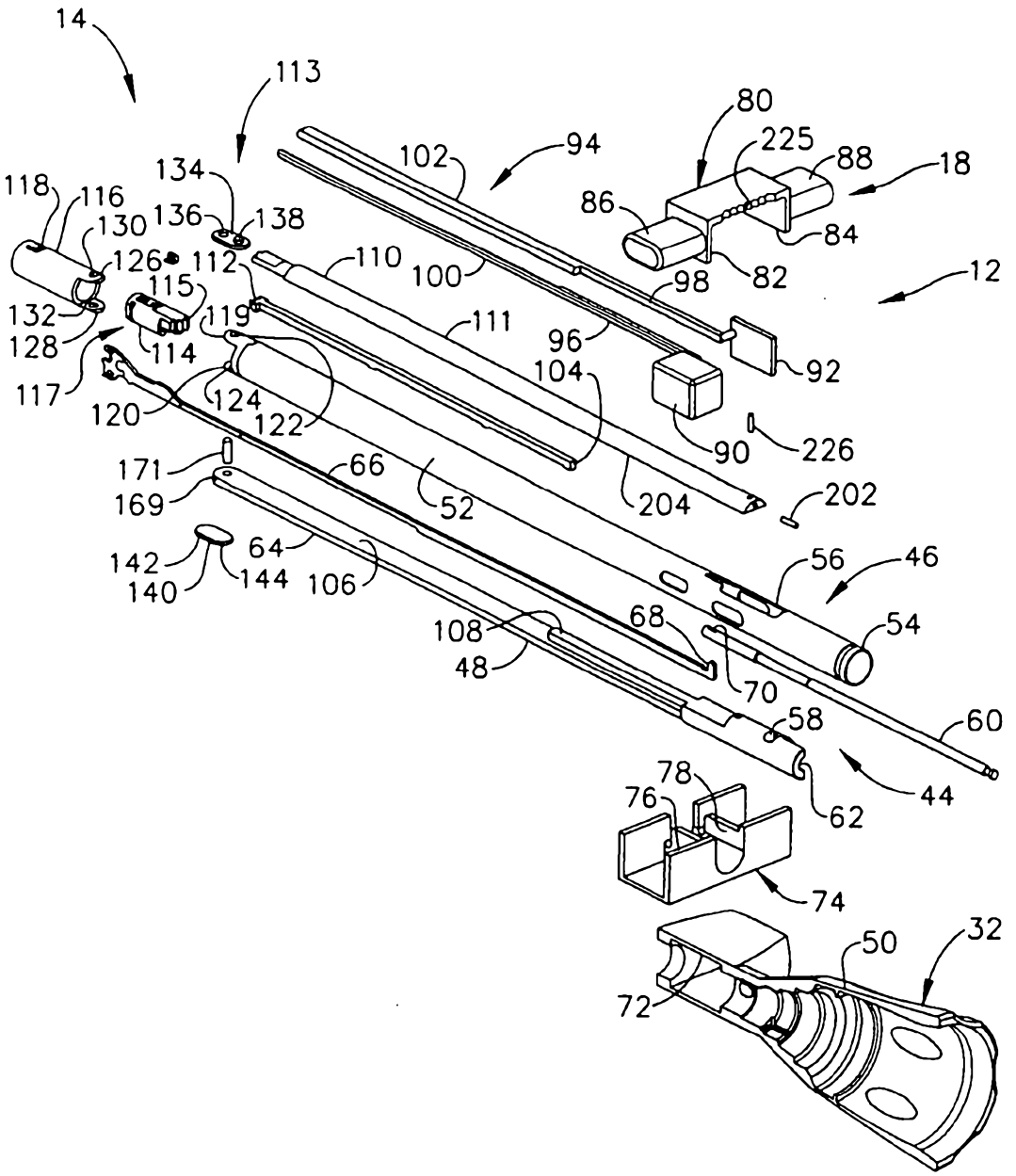

FIG. 3

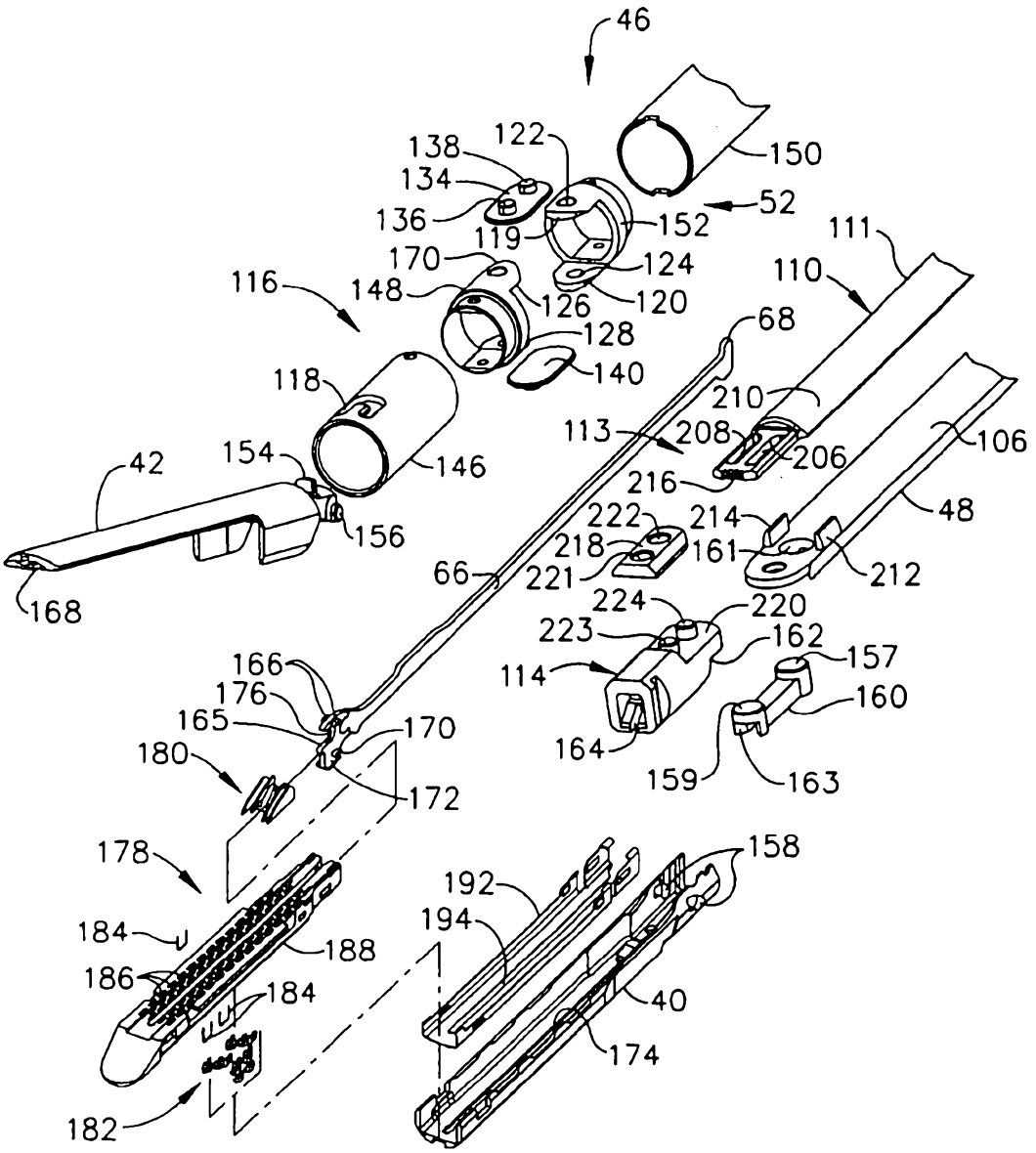
46
138
122
150
134
52
136
152
119
111
170
124
110
116
148
126
120
68
128
118
140
210
113
208
106
42
154
146
206
216
48
222
214
218
161
156
66
221
212
168
224
220
223
162
157
166
114
176
160
165
170
164
180
159
163
172
178
158
192
194
184
188
186
184
40
174
182

FIG. 4

2006203020 14 Jul 2006

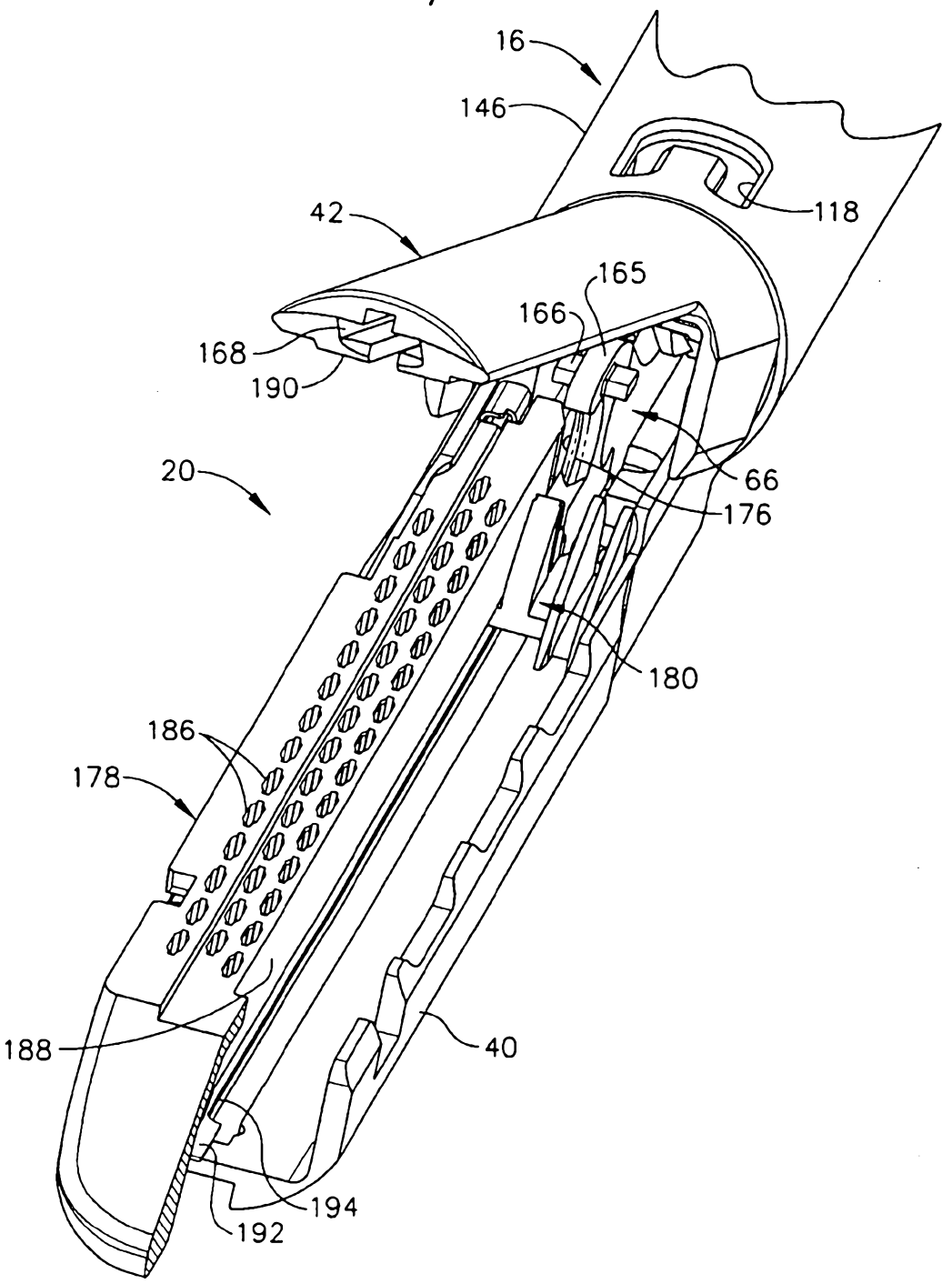

FIG. 5

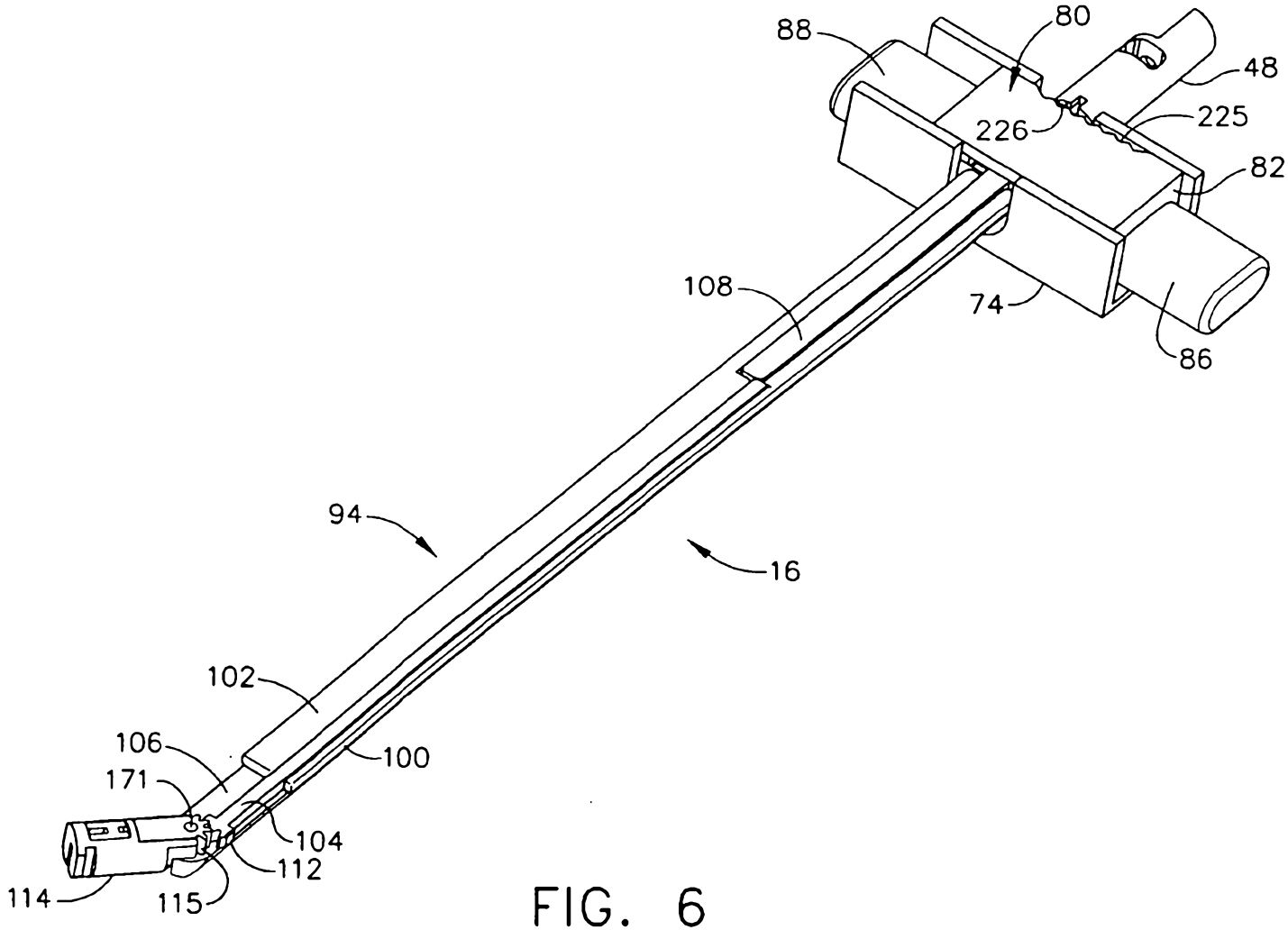

FIG. 6

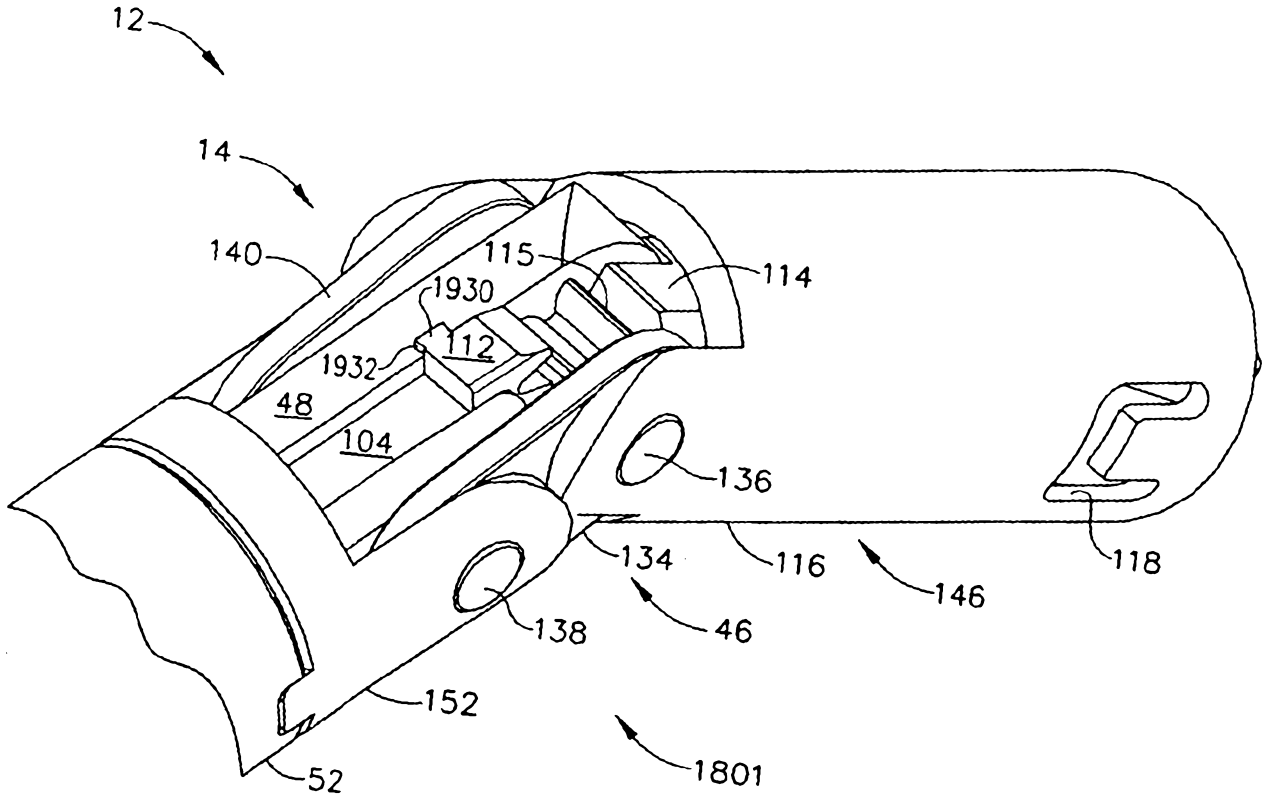
12
14
140
115
114
1930
112
1932
48
104
136
134
116
146
118
138
46
152
52
1801

FIG. 7

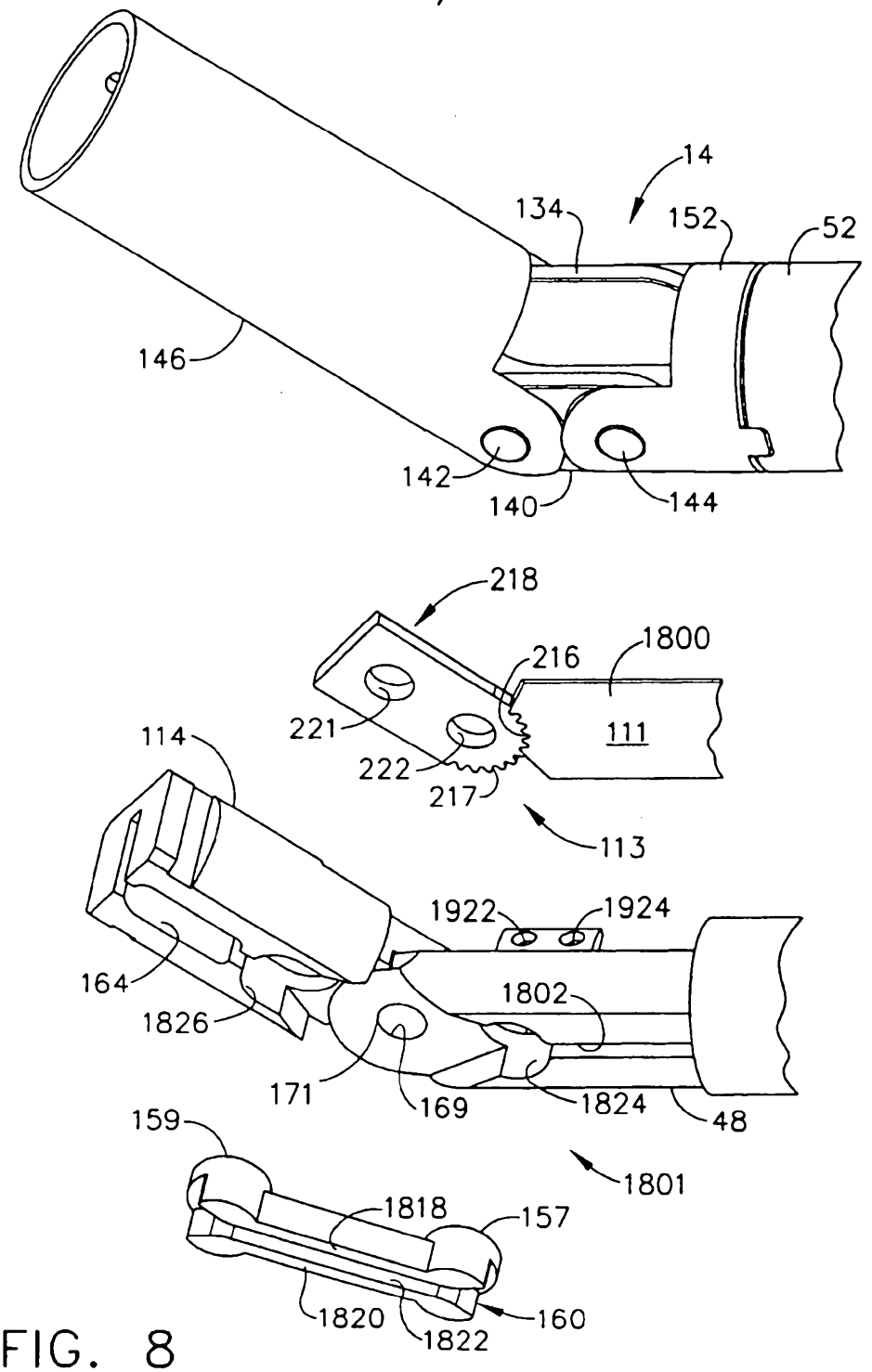
14
134
152
52
146
142
140
144
218
216
1800
221
111
222
217
114
113
1922
1924
164
1802
1826
171
169
1824
48
159
1801
1818
157
1820
1822
160

FIG. 8

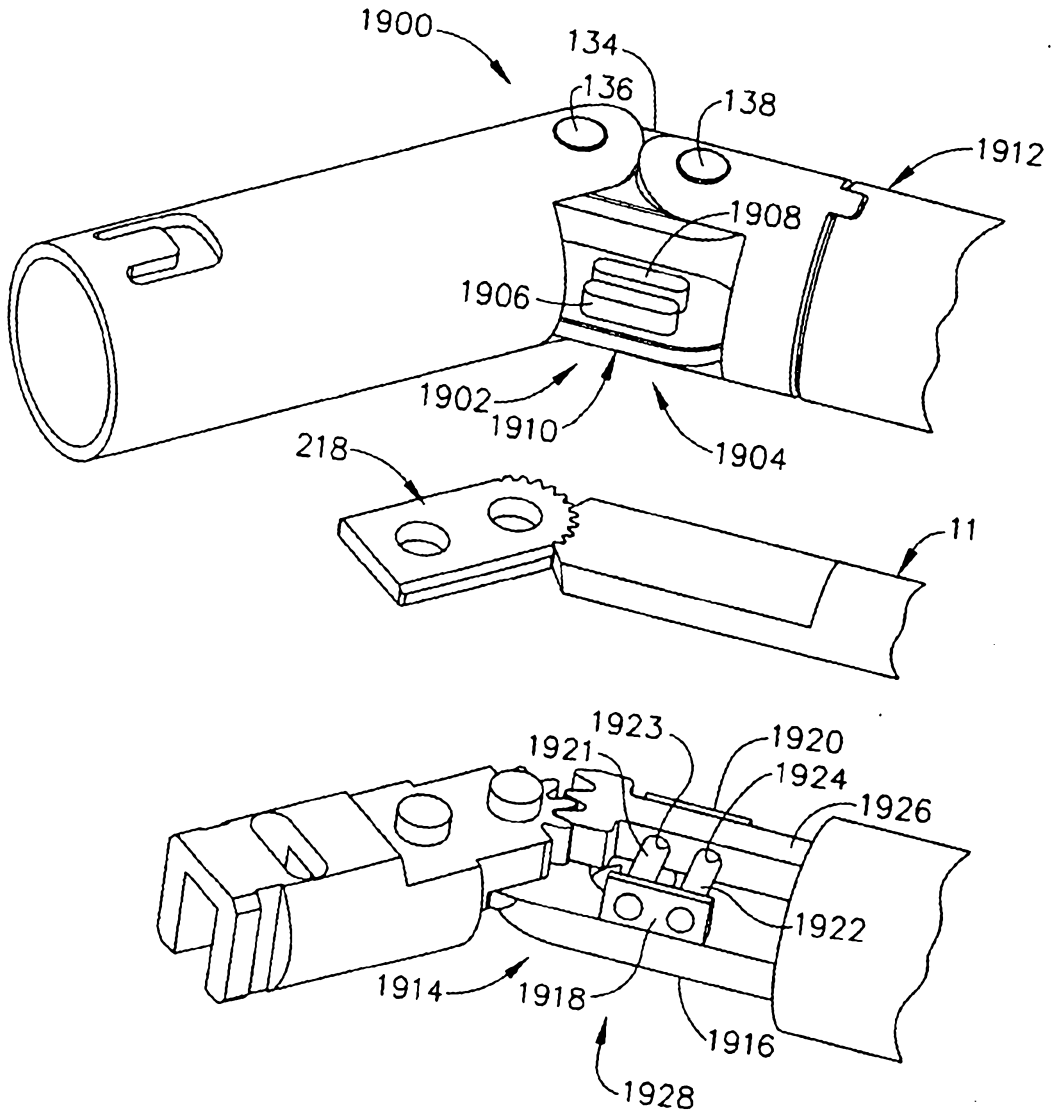
1900
134
136
138
1912
1908
1906
1902
1910
1904
218
11
1923
1921
1920
1924
1926
1922
1914
1918
1916
1928

FIG. 9

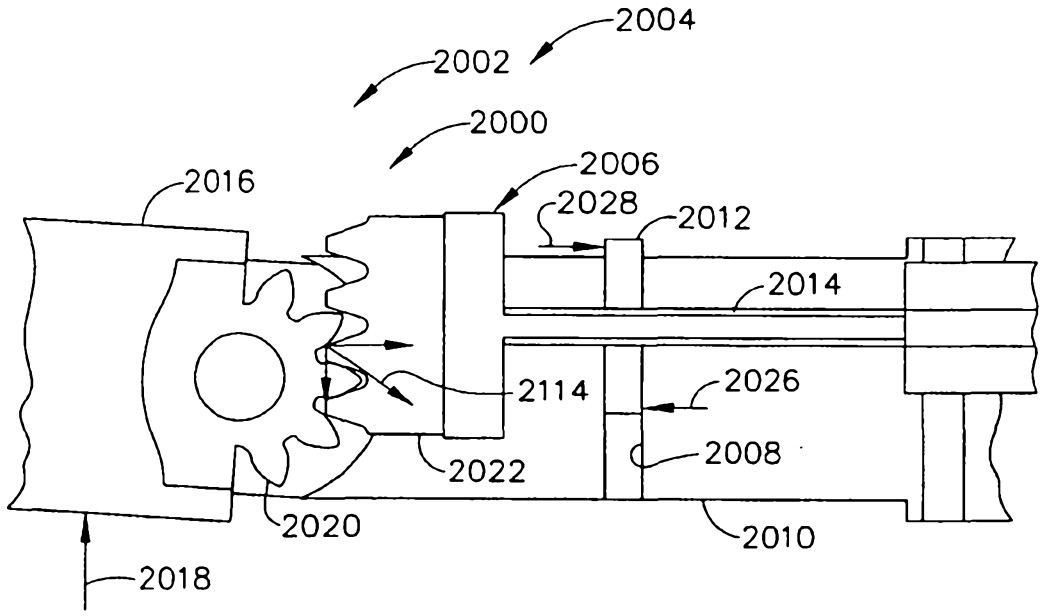
2004
2002
2000
2016
2006
2028
2012
2014
2114
2026
2008
2022
2020
2010
2018

FIG. 10

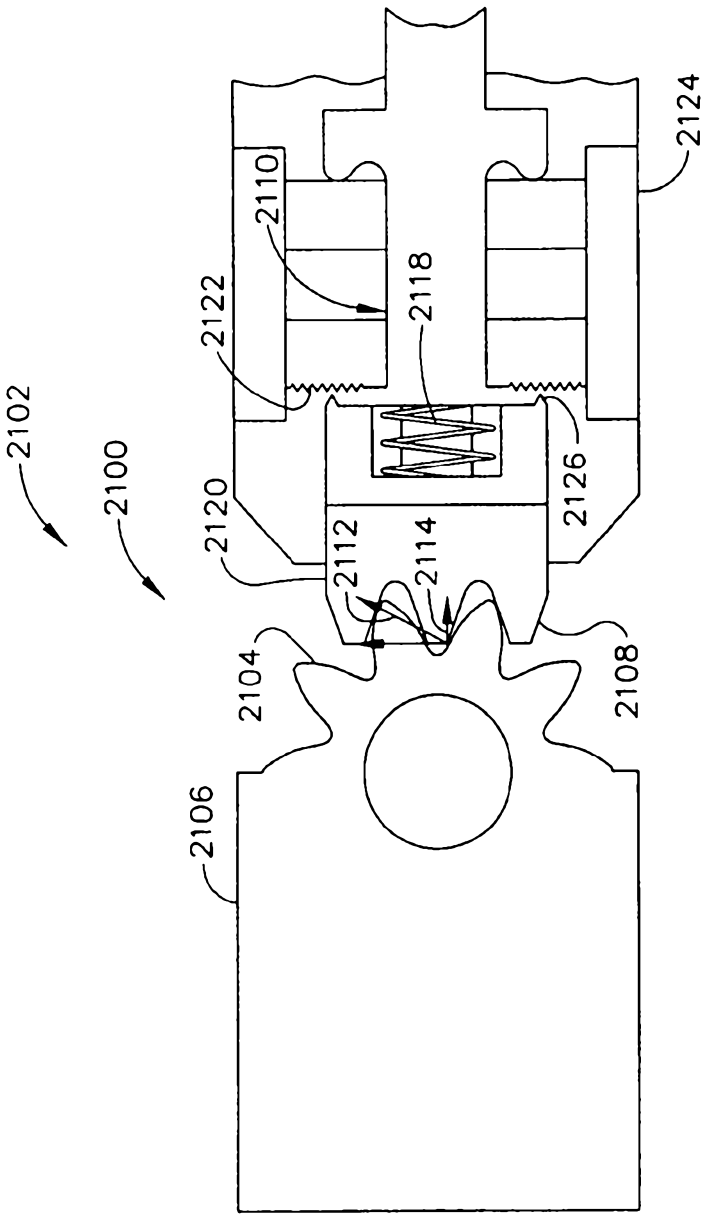
2102
2100
2122
2110
2118
2124
2120
2112
2114
2126
2104
2108
2106

FIG. 11

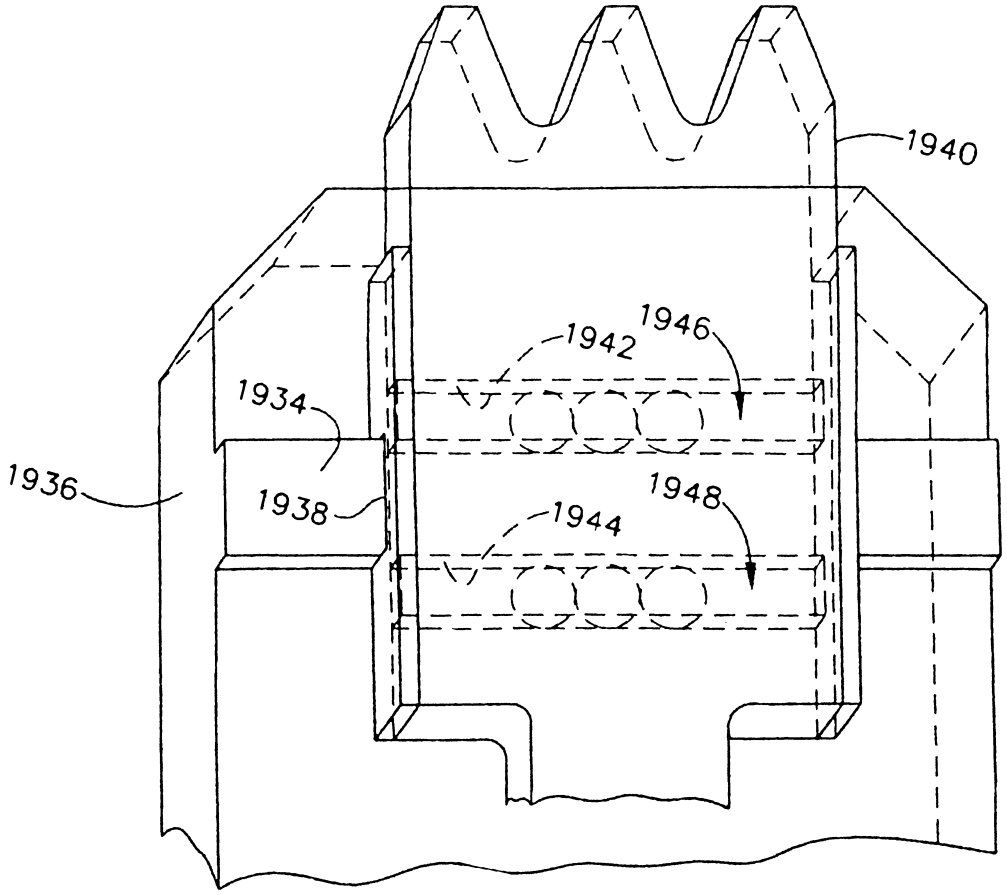

FIG. 12

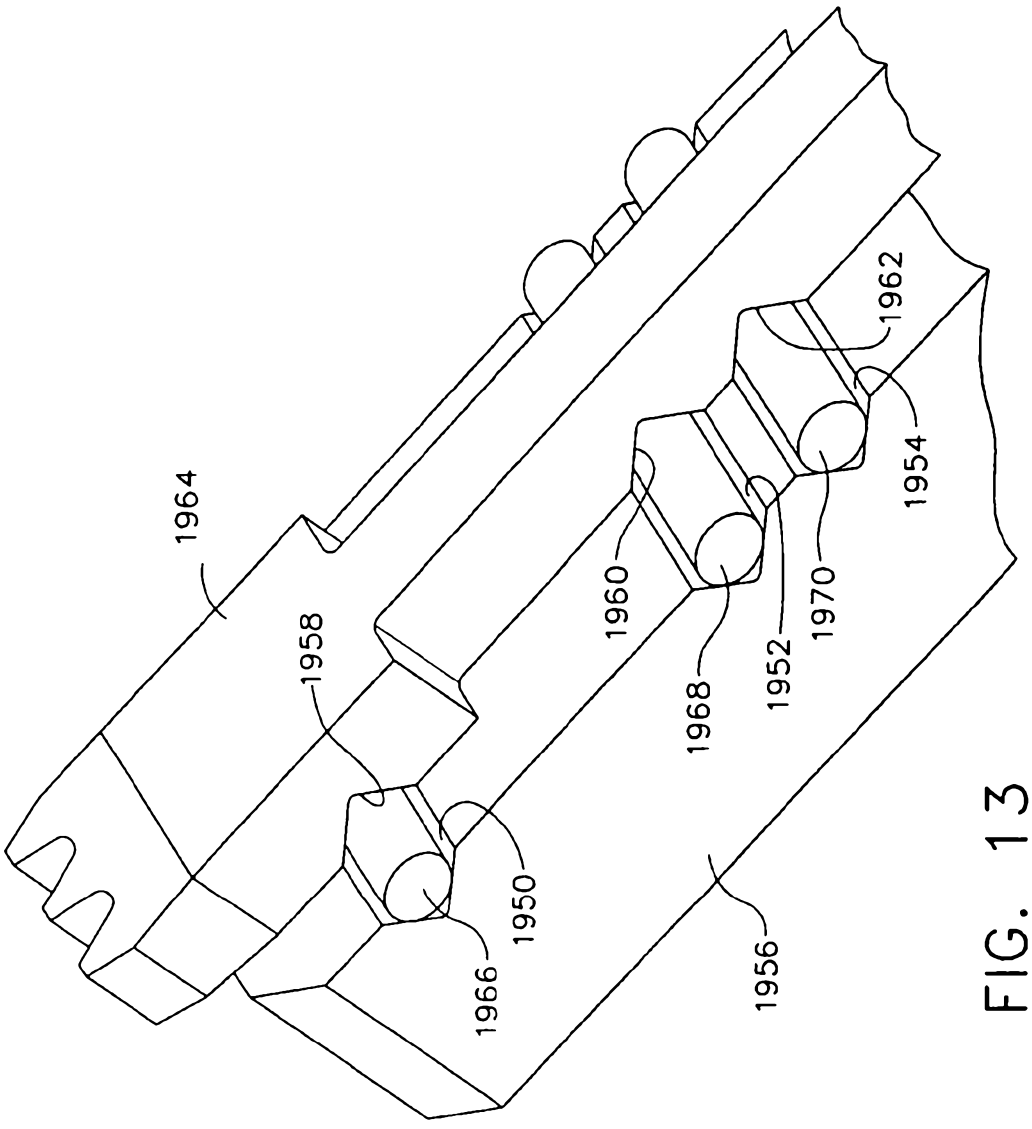

FIG. 13

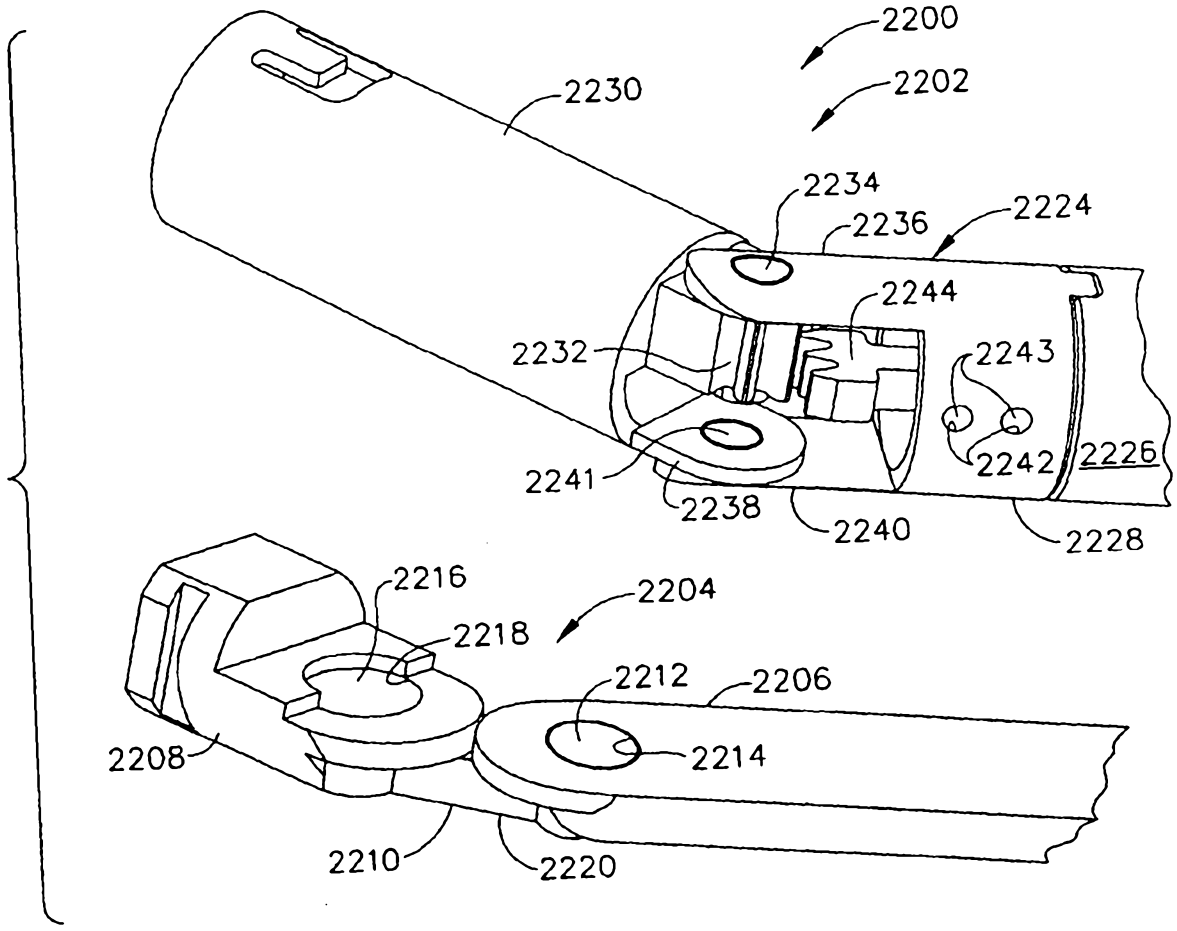
2200
2202
2230
2234
2236
2224
2244
2232
2243
2242
2226
2241
2238
2240
2228
2216
2204
2218
2212
2206
2208
2214
2210
2220

FIG. 14

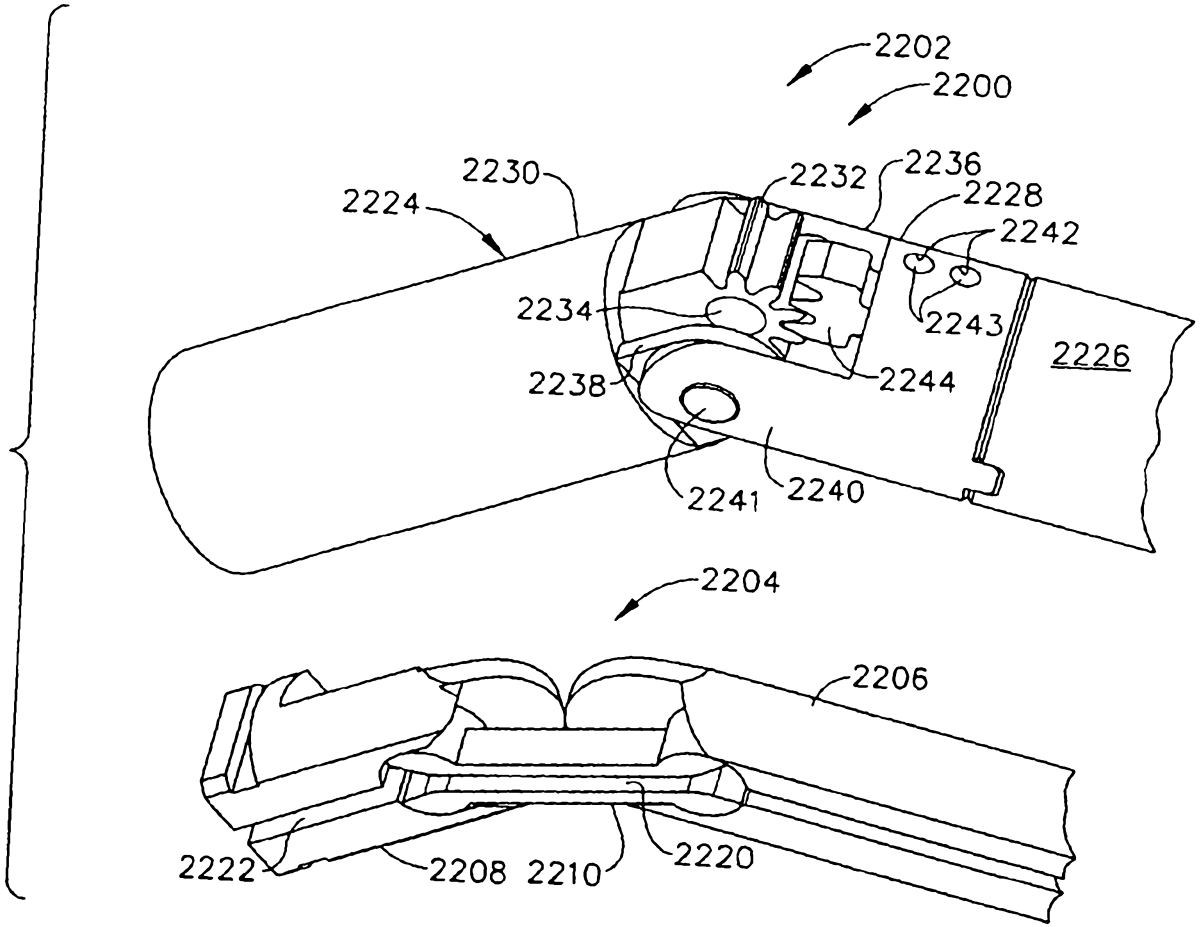
2202
2200
2230
2224
2232
2236
2228
2242
2234
2243
2226
2238
2244
2241
2240
2204
2206
2222
2208
2210
2220

FIG. 15

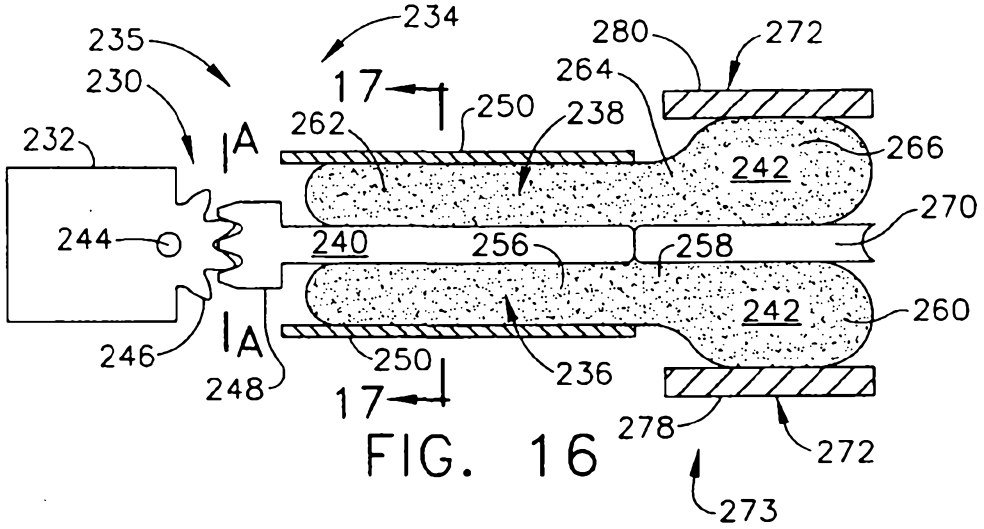

FIG. 16

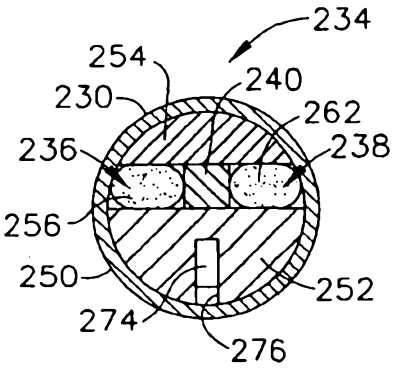

FIG. 17

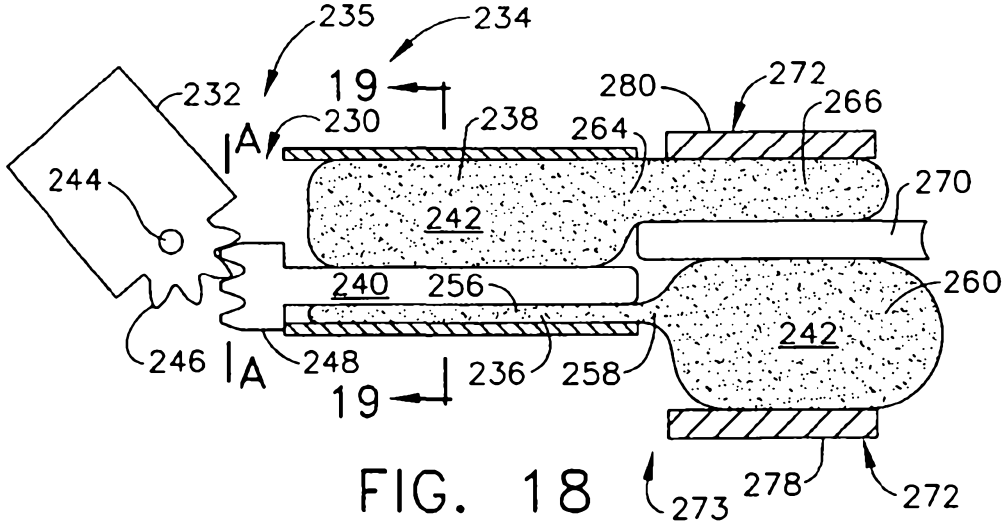

FIG. 18

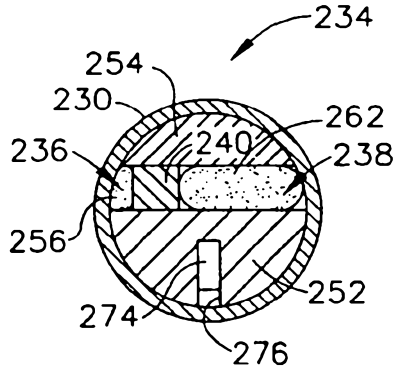

FIG. 19

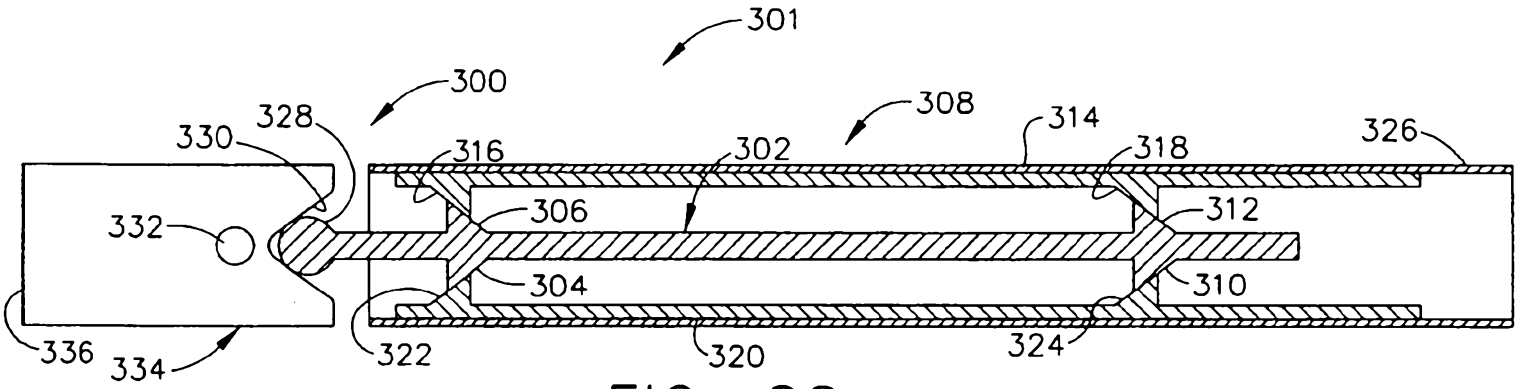
301
300
328
330
308
314
326
316
302
318
306
312
332
304
310
336
334
322
320
324

FIG. 20

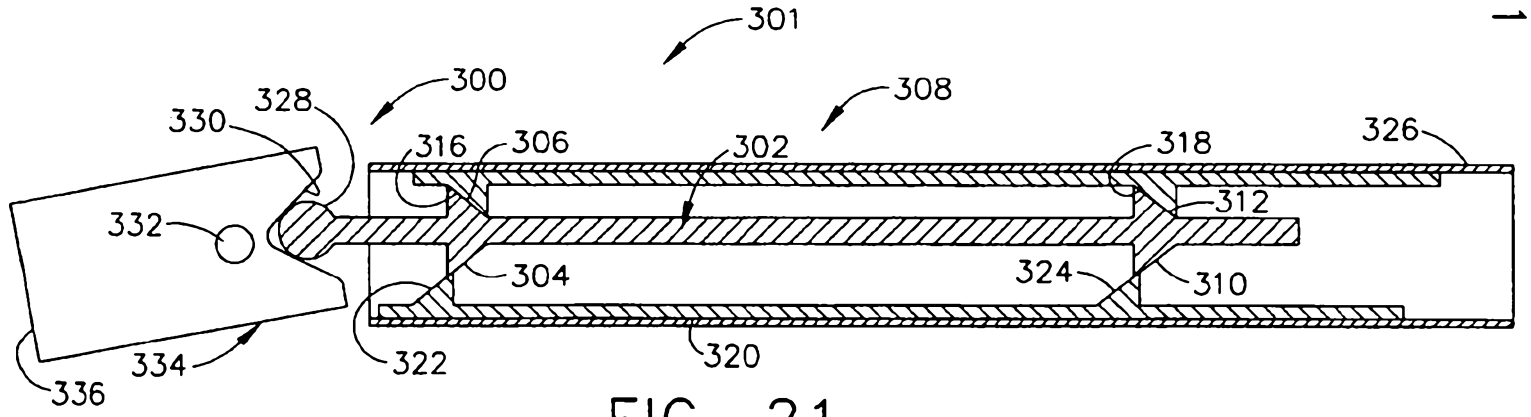
301
300
328
330
308
316
306
302
318
326
312
332
304
324
310
334
322
320
336

FIG. 21

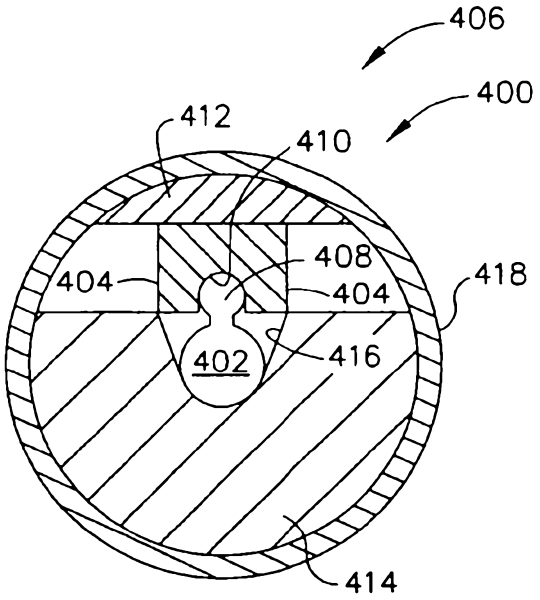
406
400
412
410
404
408
404
418
402
416
414

FIG. 22

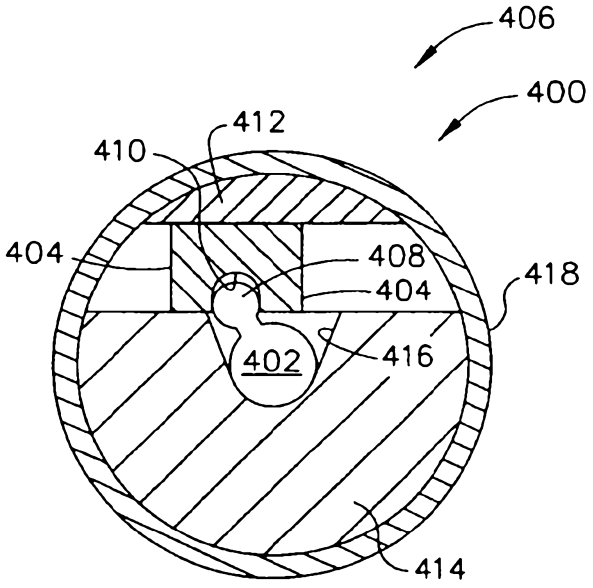
406
400
412
410
404
408
404
418
402
416
414

FIG. 23

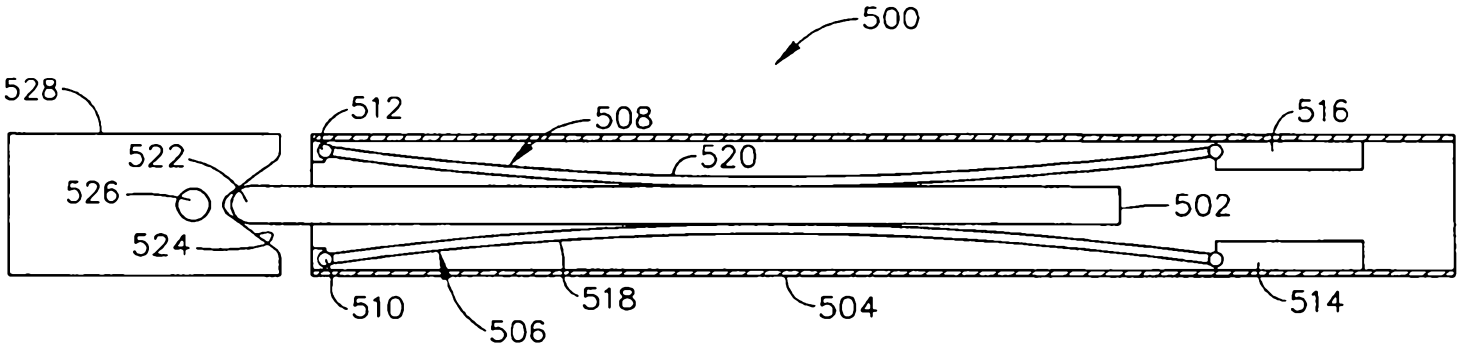
500
528
512
508
516
522
520
526
502
524
510
506
518
504
514

FIG. 24

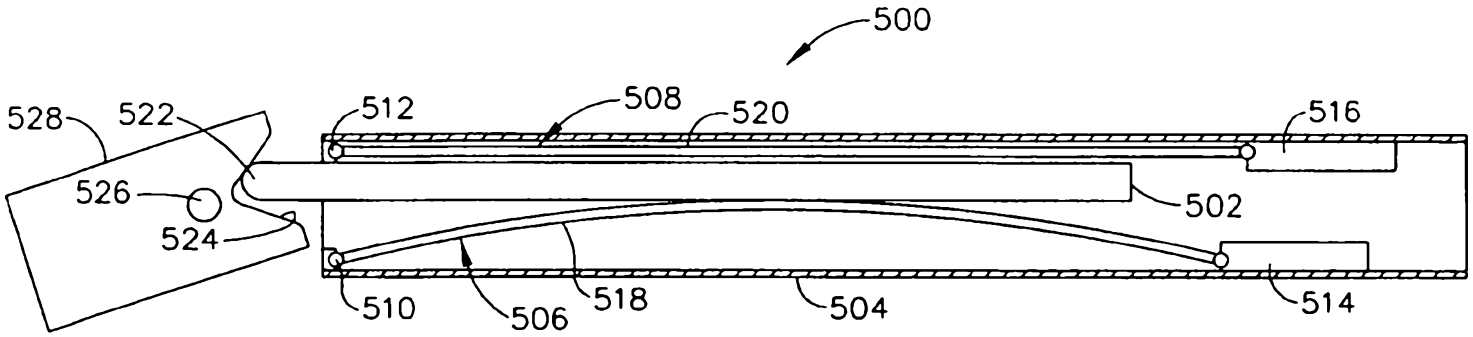
500
528
522
512
508
520
516
526
502
524
510
506
518
504
514

FIG. 25

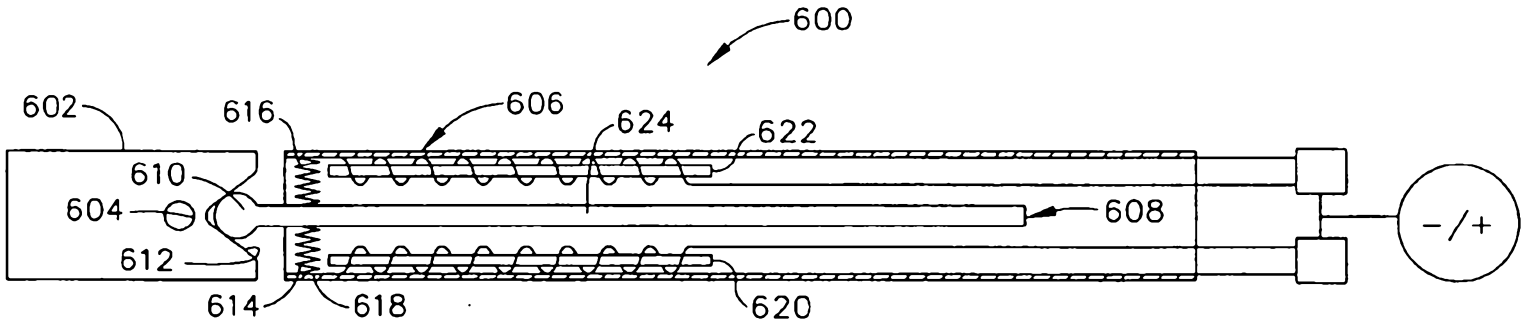
600
602
616
606
624
622
610
604
608
612
614
618
620
-/+

FIG. 26

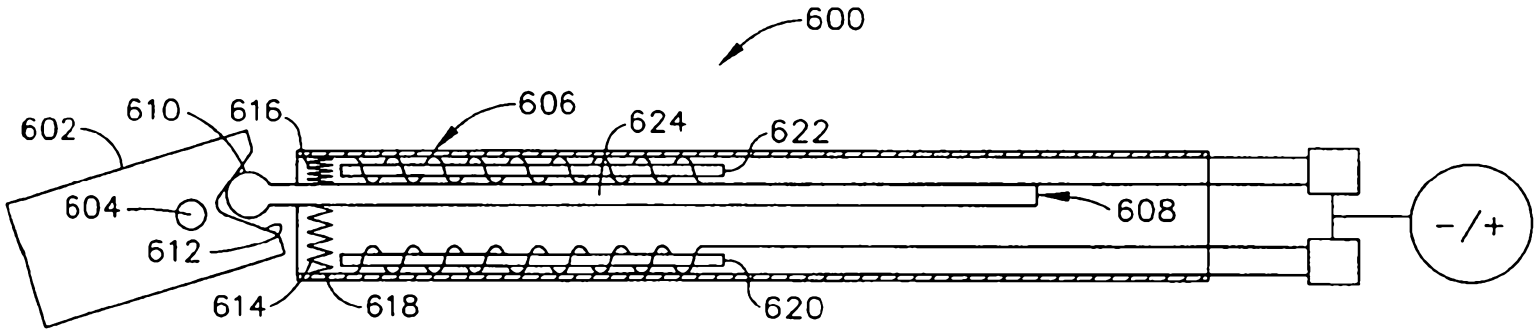
600
602
610
616
606
624
622
604
608
612
614
618
620
-/+

FIG. 27

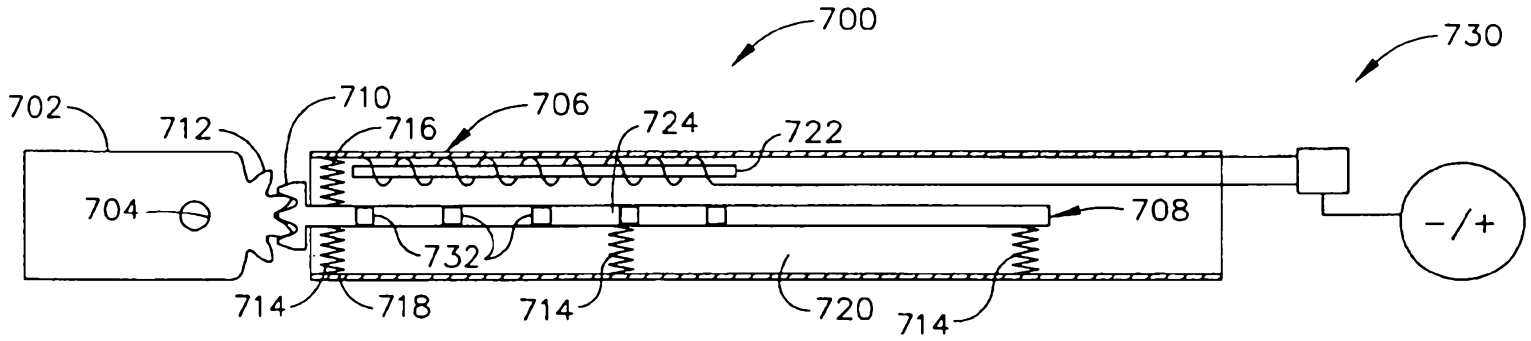
700
730
702
712
710
716
706
724
722
704
708
732
714
718
714
720
714
-/+

FIG. 28

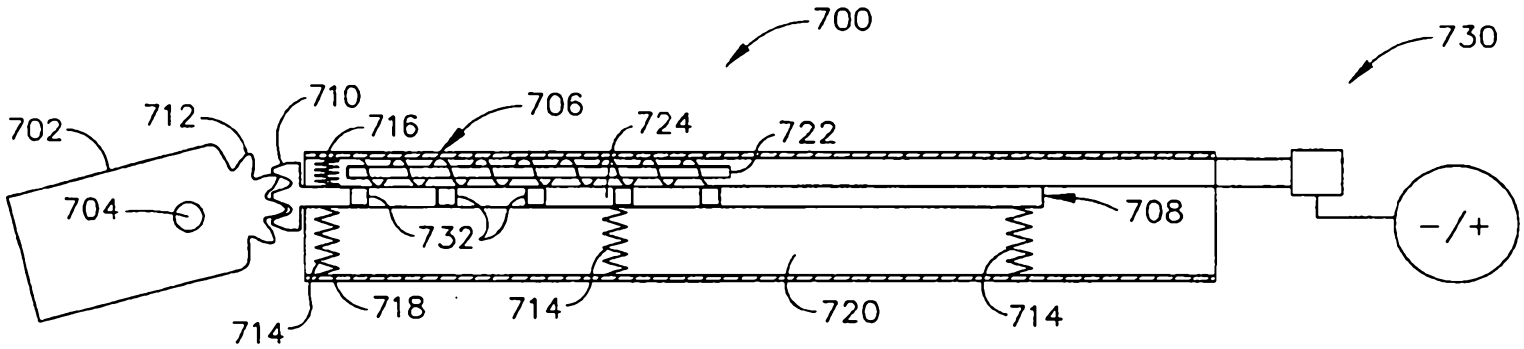
700
730
702
712
710
716
706
724
722
704
708
732
714
718
714
720
714
-/+

FIG. 29