Jan. 15, 1935. F. BURKETT 1,988,298

REVOLVING FLOOR FLANGE FITTING

Filed July 23, 1932

FIG. 1.

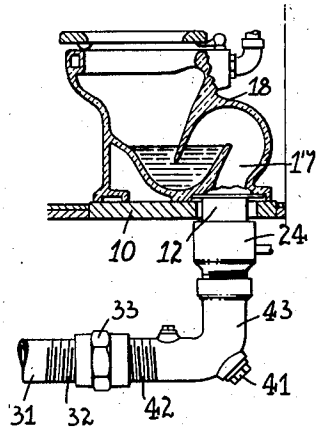

FIG. 2.

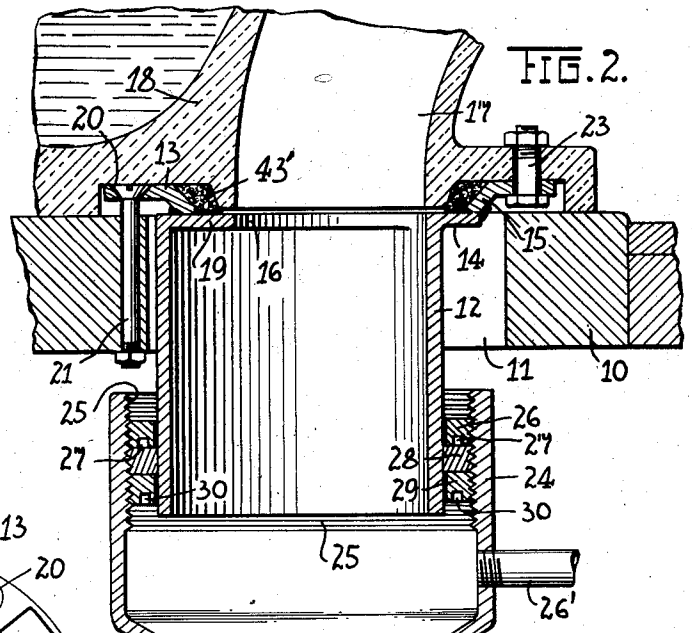

FIG. 3.

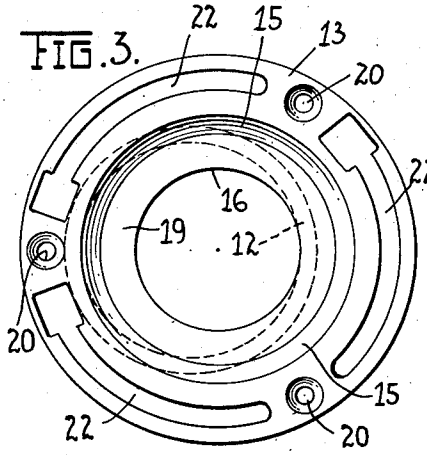

FIG. 4.

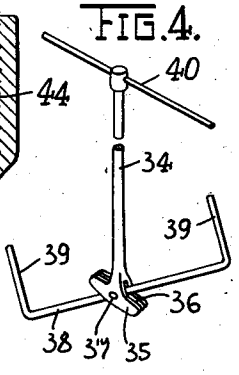

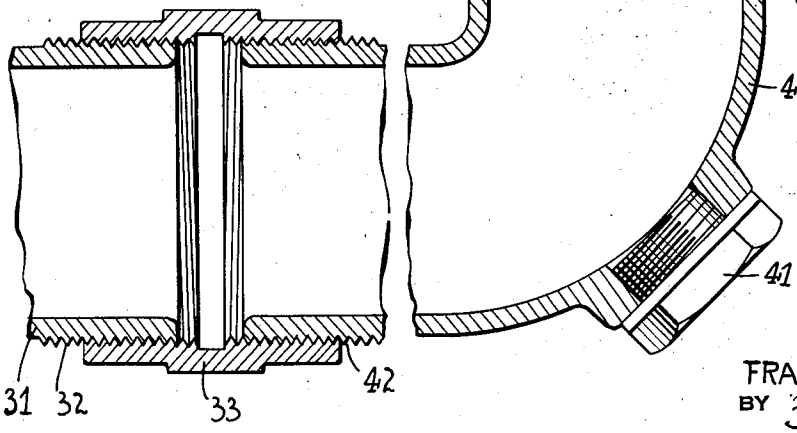

INVENTOR
FRANK BURKETT
BY F. Lederman
his ATTORNEY

Patented Jan. 15, 1935 1,988,298

UNITED STATES PATENT OFFICE

1,988,298

REVOLVING FLOOR FLANGE FITTING

Frank Burkett, Astoria, Long Island, N. Y.

Application July 23, 1932, Serial No. 624,209

2 Claims. (Cl. 285—4)

One object of this invention is the provision of a novel structure for connecting the outlet pipe of a commode unit so constructed that adjustment may be made without damaging any part of the device in mounting the same in new buildings.

Another object of the invention is the provision of a novel floor flange upon the top of which the commode unit is mounted and from the bottom of which a section of outlet pipe is permanently attached in such position that it is eccentric to the outlet portion of the commode unit.

Still another object is the provision of a novel means for providing a tight connecting joint between the above-mentioned section of outlet pipe and the main outlet pipe.

Still a further object is the provision of a section of main outlet pipe which is to be connected to the commode outlet pipe with means whereby the said section of main outlet pipe may be moved with respect to the commode outlet pipe so that said two sections may be brought into proper alignment with each other.

In the practice of making such connections at present in force, it is often necessary to bend the pipe coming from the wall to which the commode outlet is to be connected because the two pipes do not mutually align. As a result of such bending, one or both of these pipes are frequently permanently damaged, or what is more commonly the case, the union of the two sections is of lesser diameter than either of the sections so that a narrowed trap-like portion is formed which is apt to become clogged and require frequent attention to keep the pipe free-flowing. This invention aims to overcome these difficulties and at the same time to provide a structure whereby the union of the commode outlet with the main outlet may be dismounted at will and with little difficulty for repairs or for other purposes.

Referring briefly to the drawing, Figure 1 is a partly cross-sectioned elevational view illustrating the application of the device.

Figure 2 is an enlarged cross-sectional view showing the entire device in detail.

Figure 3 is a plan view of the floor flange and the attached commode outlet section.

Figure 4 is a perspective view of the tool used in assembling the union.

Referring in detail to the drawing, the numeral 10 represents the floor board upon which the commode is mounted. A hole 11 is provided in this board through which the commode outlet pipe 12 is adapted to pass. A circular floor flange 13 having its central portion beveled at 15 has the pipe 12 permanently secured thereto by being formed integral with, or soldered to, an annular lip 14 extending centrally inward from the beveled portion 15 of the flange. The upper opening 16 of the pipe 12, is in alignment with the commode outlet 17, the centers of these openings being always in vertical alignment regardless of what relative rotation may be made of either of these members with respect to the other. The commode unit is shown at 18. Since the diameter of the pipe 12 is greater than the upper opening 16 of this pipe, an offset roof 19 is provided between the opening 16 and the walls of the pipe 12. It is thus apparent that, assuming the flange 13 and pipe 12 to be mounted in the hole 11, rotation of the flange on its center will cause eccentric rotation of the pipe 12 so that its position will be constantly varied with respect to the center of the flange 13.

The flange 13 is provided with the usual countersunk openings 20 by means of which the flange is secured to the floor board 10 by bolts 21. Arcuate slots 22 are likewise provided in the flange 13 in accordance with the usual practice, by means of which the commode unit 18 is secured to the flange by bolts 23. In the practice of connecting this unit with the outlet pipe of the building the latter is usually stationary and generally composed of lead or other flexible material, and it is frequently necessary to bend either the latter pipe or the former in order to bring the two openings together so that they may be joined. Such unions are generally made by wiping and are therefore very difficult to disconnect. In this invention, a widened pipe section 24 having internal threads 25 is used to couple the pipe 12 to the main outlet pipe. An annular bushing 26 is threadably mounted within the pipe 24 and is provided on its underside with oppositely-disposed sockets 27 so that this bushing may be screwed upward or downward within the pipe 24 by means of a socket wrench which will be described below. Below this bushing 26, a lead washer or one composed of any other soft material, is mounted as shown at 28. Below this washer a lock nut 29 is provided, also having oppositely-disposed sockets 30 and being adapted to be manipulated by the socket wrench. The internal diameter of the bushing 26, and that of the lock nut 29, are such that the pipe 12 will pass through these members, and after they have been mounted in place the

coupling is tightened by screwing the lock nut 29 upward and tightening the same against the lead washer 28. In this operation, the lead washer will be crushed so that it will be forced tightly against the pipe 12 and the threads 25, thus forming a tight connection between the pipes.

The pipe 24 is provided with an air-vent pipe 26'. An elbow coupling 43 is joined to the pipe 24 at 44 and is provided with a drain plug 41. The other end of the elbow 43 is provided with screw threads 42, and the pipe 31 which is fixed to the building, is provided with screw threads 32 opposite in direction to the threads 42. A hexagonal nut 33 having threads on one side adapted to engage the threads 42 and on the other side adapted to engage the threads 32, joins these two threaded ends of pipe. It is obvious, therefore, that since the pipe 31 is stationary, rotation of the nut 33 will cause the elbow 43 and the pipe 24 to be moved in one direction, and rotation of the nut in the opposite direction will likewise shift the said elbow 43 and the pipe in the opposite direction. The elbow 43 and the pipe 24 may together be termed an intermediate pipe section between the flange pipe 12 and the sewer pipe 31.

In mounting the device as above recited, the commode unit 18 is the last to be set in place. The plumber working on this job will first set the flange 13 and its depending pipe section 12 into the hole 11 and ascertain whether the pipe 12 aligns with the openings through the bushing 26 and lock nut 29. If they do not, he will attain proper alignment by either rotating the flange 13 or shifting the elbow 43, or by a combination of these operations, until the pipe 12 fits perfectly in the openings above-mentioned.

In order to tighten the bushing 26 and lock nut 29 the wrench shown in Figure 4 is used. This wrench comprises a relatively long stem 34 having a handle grip 40 and is provided at its lower end with spaced-apart widened ears 35, having a slot 36 therebetween. A yoke 38 is pivotally mounted on the pin 37 passing through the ears 35. Parallel fingers 39 extend from opposite ends of the yoke 38 and are adapted to register in the slots 27 or 30 of the bushing 26 or 29, respectively. It is obvious that with the yoke tilted into the position shown in Figure 4, the same may be dropped through the opening 16 and pipe 12, and when the yoke reaches the space below the pipe 12 it can be straightened out into horizontal position, whereupon the wrench is lifted and rotated until the fingers 39 engage the slots mentioned. After the flange has been rotated to its aligned position, holes are drilled in the floor 10 beneath the openings 20, and the flange secured to the floor by the bolts 21.

Packing or similar leak-proof material is shown at 43' and may of course be used in any part of the device described where convenient or necessary. It is thus obvious that the device as disclosed provides a means for connecting a commode to a main outlet pipe in such a way that damage resulting from bending or breaking of pipes during the operation of making the connection, is eliminated.

Obviously, modifications in form and structure may be made without departing from the spirit of the invention.

I claim:

1. In a device of the class described, a floor flange having a central opening therein, a pipe depending from said flange and eccentric with respect to said opening, a main outlet pipe at right angles to said depending pipe, an intermediate pipe section attached to said flange pipe and said main outlet pipe, means for shifting said intermediate pipe section toward or away from said main outlet pipe, and means for interlocking said flange pipe with said intermediate pipe section.

2. In a device of the class described, a floor flange having a central opening therein, a pipe depending from said flange and eccentric with respect to said opening, a main outlet pipe at right angles to said depending pipe, an intermediate pipe section attached to said flange pipe and said main outlet pipe, means for shifting said intermediate pipe section toward or away from said main outlet pipe, and means for interlocking said flange pipe with said intermediate pipe section, said means comprising an annular nut surrounding said flange pipe and threadably engaging the interior of said intermediate pipe section.

FRANK BURKETT.