F. M. JOHNSON.

TRACK DEVICE.

APPLICATION FILED FEB. 23, 1909.

1,162,863.

Patented Dec. 7, 1915.

4 SHEETS—SHEET 1.

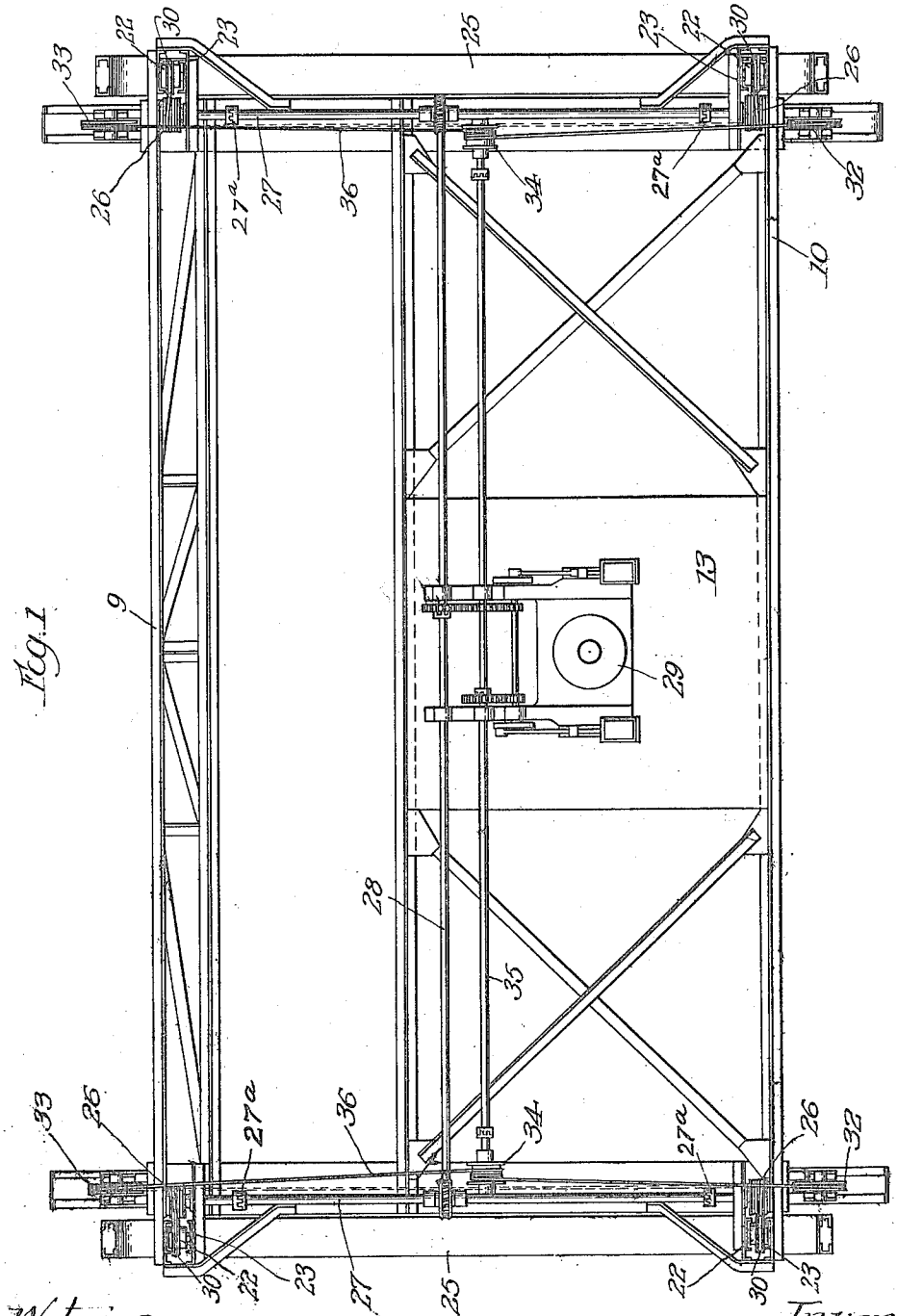


Fig. 1

Witnesses.

Harold B. Barnett

W. Perry Hahn

Inventor:

Francis M. Johnson.

By: James, Addington & Ames

Attys.

F. M. JOHNSON.

TRACK DEVICE.

APPLICATION FILED FEB. 23, 1909.

1,162,863.

Patented Dec. 7, 1915.

4 SHEETS—SHEET 2.

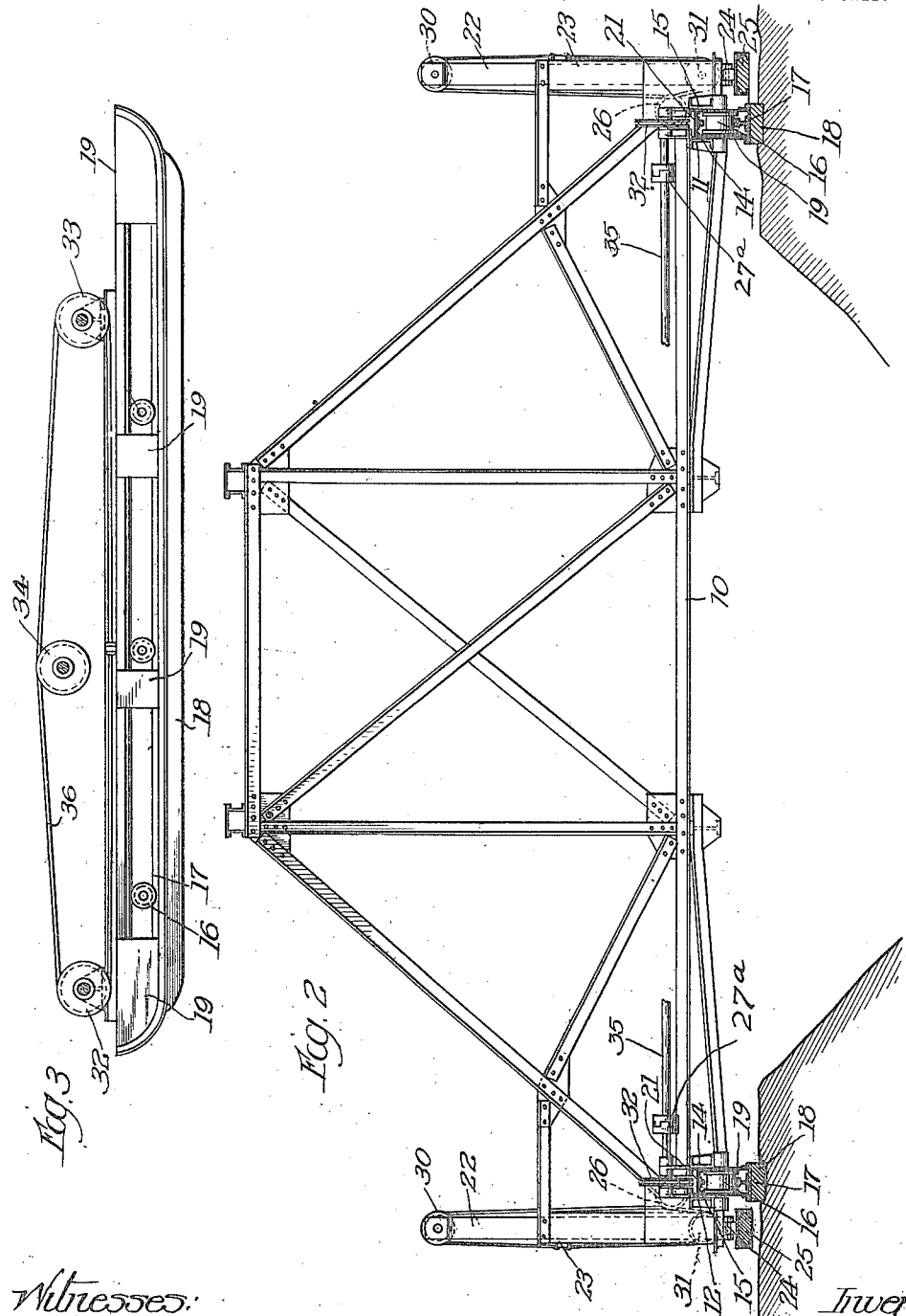


Fig. 3

Fig. 2

Witnesses:
Harold G. Barrett
W. Perry Haley

Inventor:
Francis M. Johnson.
By: James, Addington & Ames
Attys

F. M. JOHNSON.

TRACK DEVICE.

APPLICATION FILED FEB. 23, 1909.

1,162,863.

Patented Dec. 7, 1915.

4 SHEETS—SHEET 3.

Fig. 5

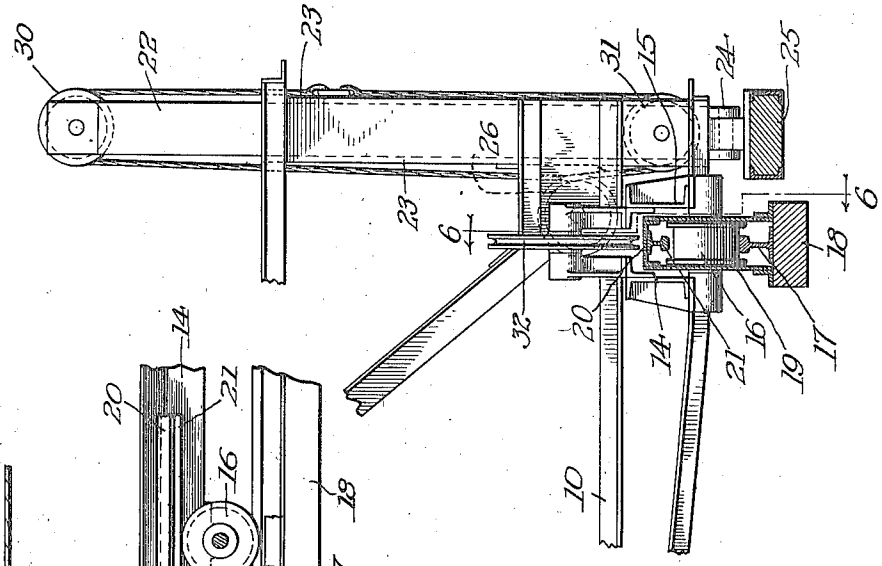


Fig 6

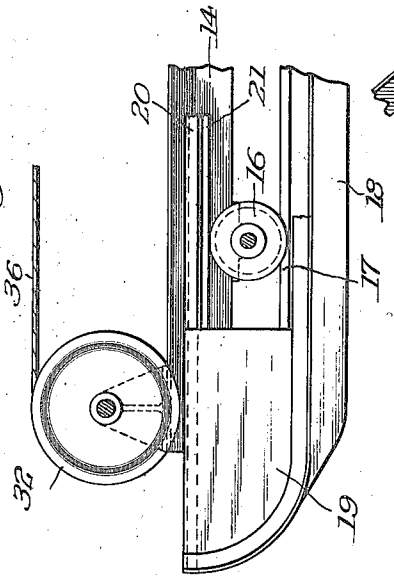


Fig. 4

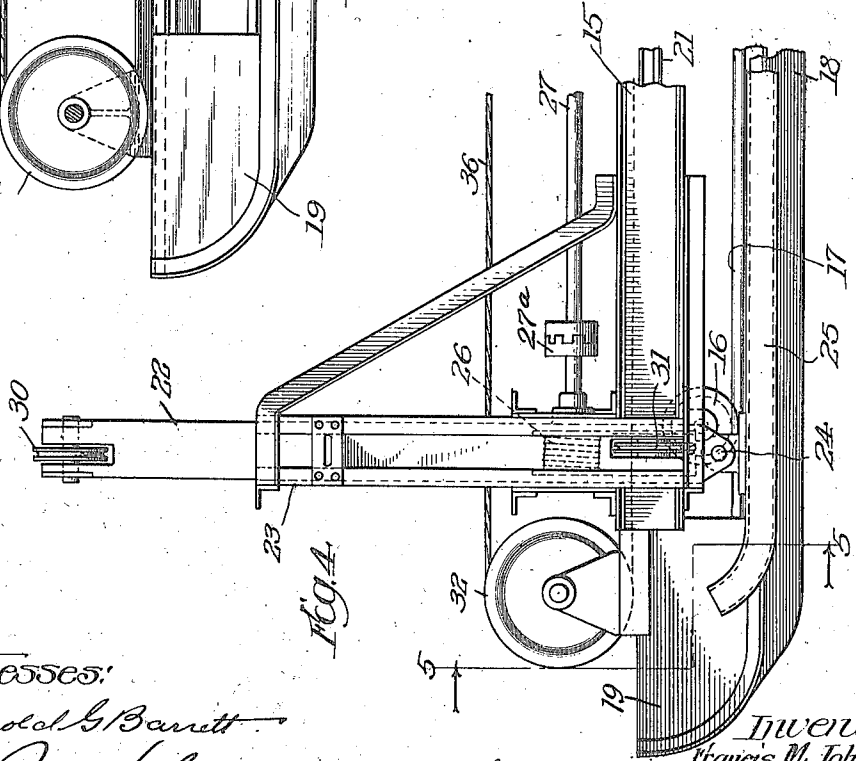


Witnesses:

Harold G. Barrett

W. Perry Halun

Inventor:

Francis M. Johnson

By: James, Addington & Anderson

Attys.

F. M. JOHNSON.

TRACK DEVICE.

APPLICATION FILED FEB. 23, 1909.

1,162,863.

Patented Dec. 7, 1915.

4 SHEETS—SHEET 4.

Fig. 7

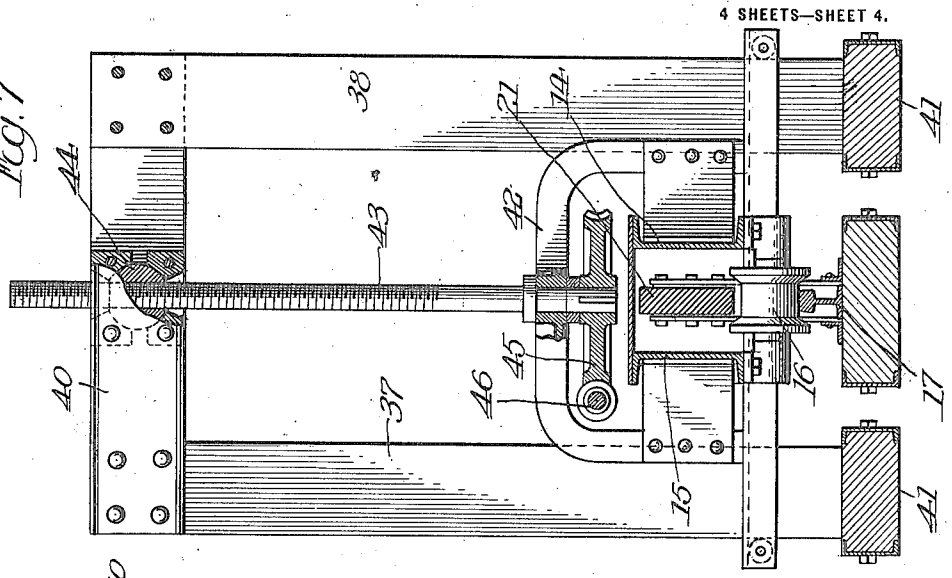


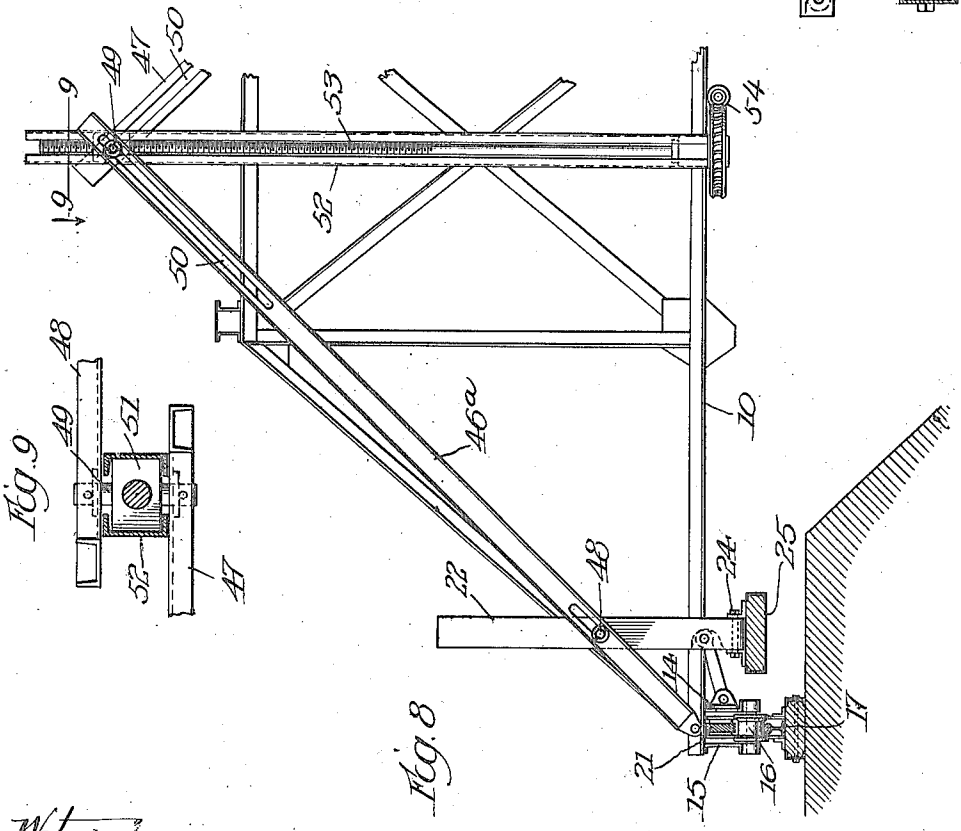


Fig. 9

Fig. 8

Witnesses:

Harold G. Barnett

W. Percy Haley

Inventor:

Francis M. Johnson.

By: Jones, Addington & Ames,

Attys

# UNITED STATES PATENT OFFICE.

FRANCIS M. JOHNSON, OF CHICAGO, ILLINOIS.

## TRACK DEVICE.

1,162,863. Specification of Letters Patent. Patented Dec. 7, 1915.

Application filed February 23, 1909. Serial No. 479,425.

*To all whom it may concern:*

Be it known that I, FRANCIS M. JOHNSON, a citizen of the United States, residing at Chicago, in the county of Cook and State of Illinois, have invented new and useful Improvements in Track Devices, of which the following is a full, clear, concise, and exact description, reference being had to the accompanying drawing, forming a part of this specification.

My invention relates to improvements in portable track devices for excavators.

One of the objects of my invention is to provide means whereby the excavator may be readily raised from its track and the track moved as the work progresses. I have illustrated, for the purpose of disclosing my invention, certain embodiments thereof in the accompanying drawings.

In said drawings Figure 1 is a plan view of an excavator frame showing my track operating apparatus; Fig. 2 is a front elevation of the excavator frame; Fig. 3 is a detail side view of the track; Fig. 4 is an enlarged detail side view of one end of the excavator frame; Fig. 5 is a sectional view on the line 5—5 of Fig. 4; Fig. 6 is an enlarged detail sectional view taken on the line 6—6 of Fig. 5; Fig. 7 is a detail view of a modification of the spud-operating means; and, Fig. 8 is a front elevation showing still another modified means of operating the spuds; and, Fig. 9 is a section on the line 9—9 of Fig. 8.

In the embodiment of my invention illustrated, the excavator frame comprises a suitable frame work, preferably constructed of structural iron, having a pair of transversely extending sills 9 and 10 and a pair of longitudinally extending chords 11 and 12. Suitable bracing irons are connected between the sills and chords to give the framework rigidity, and at one point on the framework I provide a platform 13 for carrying the operating mechanism. I have not illustrated the digging mechanism of the excavating machine, as I have considered this unnecessary and as most any form of digging mechanism may be used in connection with my invention.

The side chords 11 and 12 each comprise a pair of channel irons 14 and 15 suitably spaced apart and secured to the under sides of the sills of the frame. Journaled to the under side of the side chords are a plurality of rollers 16, which are adapted to rest upon the tracks 17 and carry the weight of the frame. I have indicated on each side of the frame three rollers, but it will be understood that any number of rollers may be used. The tracks 17, upon which the framework is adapted to move back and forth as the excavator operates, are preferably mounted upon suitable longitudinally extending sleepers 18. These sleepers are suitably connected by braces, such as 19, arranged at suitable intervals along the entire length of the sleepers, with a channel-iron member 20 arranged between the channel irons 14 and 15 of the side chords. On the under side of this channel-iron member 20 is arranged a light inverted track 21, which is slightly spaced apart from the roller 16, so that when the rollers are resting on the track 17 the track 21 will clear the rollers. By this construction of the track it will be noted that when the weight of the excavator frame is upon the track 17 the rollers provide wheels for the excavator whereby the excavator may be run back and forth on the track 17. On the other hand, when the weight of the excavator is taken off the track 17, as when the excavator is raised, then the rollers form bearings for the track 21 whereby the track may be moved back and forth under the excavator. By constructing the rollers 16 so that there is a large amount of space between the flanges thereof and the track, the ends of the track may be shifted laterally to vary the direction of travel of the machine.

For raising the excavator off its track I provide at each of the four corners of the frame a spud 22, which operates in suitable spud guides 23 rigidly secured in the frame. The two spuds on each side of the machine are connected by pivoted joints 24 with spud shoes 25, which preferably extend the entire length of the machine, although separate shoes may be used for each spud if desired. When the weight of the excavator is upon the tracks 17 the spud shoe is raised by the spuds clear of the ground, but when it is desired to raise the excavator from its track the spud is lowered into engagement with the ground, when the frame may be lifted on the spuds. While I have shown and described four raising and lowering spuds, it will be understood, of course, that any number desired may be used.

For operating the spuds to raise or lower the excavator frame I provide for each spud

a spud operating drum 26, the drums of each side being mounted on a common shaft 27, and connected thereto by suitable clutches 27ª which clutches permit the spuds to be operated collectively when all of the clutches are in engagement, or individually, depending upon the clutches which are thrust into engagement. The shaft 27 has a self-locking worm gear connection with a transversely extending operating shaft 28, driven from the operating engine 29 mounted on the platform 13, and connected thereto by a clutch. Each spud at its upper and lower ends is provided with sheaves 30 and 31. A cable is passed a number of times around the operating drum 26. One end is then taken over the sheave 30 and connected to the spud guide at a point near its upper end; the opposite end of the cable is taken over the sheave 31 and connected to the spud guide at a point near its upper end. It will therefore be seen that when the drum 26 is rotated in one direction the spud will be forced downward, and after the same has engaged the ground the excavator will be raised on the spud by the operation of the cables of the spuds. When it is desired to lower the excavator frame on its track the direction of rotation of the drum is reversed, whereby the excavator frame is lowered on the track and the spuds are raised clear of the ground. It will be noted that by pivotally connecting the spud shoe to the spuds, there is a jointed connection which permits the adjustment of one spud relatively to the other, whereby variation in grade may be accommodated.

For moving the tracks 17 forward when the excavator is raised therefrom, I provide sheaves 32 and 33 at each corner of the excavator frame above the tracks. An operating drum 34 at each side of the machine, driven by a shaft 35 operated from the engine 29 and connected thereto by a clutch, has wrapped around the same a cable 36. One end of this cable is passed over the sheave 33 and connected at a central point to the track 21; the other end is taken over the sheave 32 and likewise connected to the track. By this arrangement, when the drum 34 is rotated in one direction the cable will tend to draw the track forward, and when the drum is rotated in a reverse direction the track will be moved in an opposite direction.

The operation of the machine is very simple. After the cut has been made in the embankment or the excavation has been made to the point where the excavator can move no farther on its track, the spuds 22 are lowered, raising the machine off of its tracks. The drums 34 are then set in motion, advancing the track as far as it will go, and the excavator is then lowered on the track, and the spuds raised clear of the ground. The work can then continue until the excavator moves as far on its track as possible, when the above operation is repeated. Suitable automatic cut-off mechanism may be provided, if so desired, which will automatically disconnect the spud-operating mechanism from the engine when the spuds reach the limit of their upward movement.

In Fig. 7 I have illustrated a modification of the spud-operating mechanism. In this figure the device arranged to raise and lower the excavator frame consists of a pair of spuds 37 and 38, connected together at the top by a pair of cross-beams 40. At the lower end of each of the spuds is arranged a spud shoe 41 which extends upon either side of the track. A suitable frame 42 is provided which is rigidly connected to the excavator frame, and having one end journaled in this frame is an operating screw 43, the upper end of which extends through a nut 44 mounted in the cross member 40 of the spuds. A suitable gear 45 is connected to the lower end of the screw 43 and is operated by a worm gear 46 driven from a shaft connected with the operative engine. By rotating the screw 43 in one direction the spuds 37 and 38 will be caused to move downward, while rotating the screw in an opposite direction will raise the spuds relative to the frame. It will be noted that due to the worm gear connections 45 and 46, the spuds will be automatically locked in any position to which they may be moved. It will also be seen that when this form of mechanism is used in connection with the operating shafts 27 and their clutch connections, the spuds will be capable of independent or collective operation.

In Fig. 8 I have illustrated a still further modification of my invention. In this figure the spuds at each end of the machine are mounted on the inner side of the track and are guided by a short link connection with the channel-iron member 14. Connected to the extreme sides of the frame of the excavator are two pairs of levers 46ª and 47, which are connected to the spuds at an intermediate point, such as 48. The two ends of the levers are connected together by a trunnion 49, operating in slots 50 thereof, and which is mounted on a screw block 51 operating in vertically extending guides 52. A screw 53 extends through the block, and at its lower end is provided with a worm gear connection 54 with the shaft of the operating engine. When the screw is rotated in one direction it will cause the nut 51 thereon to travel downwardly in the guides 52. This will draw the upper ends of the levers 46ª and 47 downward, thereby forcing the spuds downwardly and raising the excavator frame. When the screw is rotated in the reverse direction the opposite result is obtained,—that is, the excavator frame will be lowered and the spuds raised.

It is obvious that instead of having the levers arranged transversely of the excavator they can be arranged longitudinally thereof, in which case one of the levers 47 and one of the levers 46ª will be connected to the spuds on the same side of the excavator, and the corresponding levers will be connected to the opposite spuds.

When speaking herein of the horizontal movement or a movement horizontally of the machine, including the tracks, I mean a general movement of the machine over the surface of the ground traversed in the direction desired.

While I have described and shown certain forms of my invention, it will be understood that modifications may be made therein without departing from the spirit thereof, as set forth in the appended claims. It will also be understood that while I have described my invention as being particularly applicable to excavators, the same may be applied to various other uses.

Having thus described my invention what I claim as new and desire to secure by Letters Patent is:

1. In a device of the character described, the combination with a frame, of tracks on which said frame moves, frame lifting means and connecting means between said tracks and frame to cause them to move together vertically by permitting a relatively horizontal movement between the two, and means on the frame independent of the forward movement of the frame for moving the tracks horizontally after they have been moved vertically with the frame.

2. The combination with a frame, of tracks on which the same moves vertically movable with said frame, said frame and tracks having a relative horizontal movement, means for lifting said frame vertically, means on the frame for moving the tracks horizontally when lifted with the frame, and means for moving the frame horizontally when the same rests on the tracks.

3. In a device of the character described, the combination wth a frame, of tracks on which said frame moves, of supports on said frame for carrying the weight thereof and vertically movable relatively to said frame, means for shifting the weight of the frame to said supports to permit the tracks to be moved, and shoes on said supports having a pivotal connection therewith.

4. In a device of the character described, the combination with a frame, of tracks on which said frame moves, a plurality of supports arranged on each side of said frame for carrying the weight thereof and vertically movable relatively to said frame, means for shifting the weight of said frame to said supports to permit the tracks to be moved, and a shoe on each side of said frame common to all of the supports on the same side of the frame and pivotally connected therewith.

5. In a device of the character described, the combination with a frame, of tracks on which said frame moves, supports on the frame on which said frame may be raised and vertically movable relatively to said frame, holding means automatically locked for holding the frame raised on said supports, and means for moving the tracks when the frame is raised.

6. In a device of the character described, the combination with a frame, of tracks on which said frame travels, a plurality of supports on said frame for carrying the weight thereof and vertically movable relatively to said frame, and means for independently or collectively moving said supports.

7. In a device of the character described, the combination with a frame, of tracks on which said frame travels, a plurality of supports on said frame for carrying the weight thereof and vertically movable relatively to said frame, means for independently or collectively moving said supports and automatic means for locking said supports independently of one another in any position to which they may be moved relatively to said frame.

8. In a device of the character described, the combination with a frame, of tracks on which said frame moves, a plurality of supports on each side of said frame for carrying the weight thereof and vertically movable relatively to said frame, means for independently or collectively moving said supports, and a shoe on each side of said frame common to all of the supports on the same side and pivotally connected therewith.

9. In a device of the character described, the combination with a frame, of tracks on which said frame moves, a plurality of supports on said frame for carrying the weight thereof and vertically movable relatively to said frame, means for independently or collectively moving said supports, automatic means for locking the supports independently of one another in any position to which they may be moved relatively to said frame, and a shoe on each side of said frame common to all of the supports on the same side of the frame and pivotally connected therewith.

10. In a device of the character described, the combination with a frame, of relatively stationary tracks on which said frame is adapted to travel connected with said frame, and means for permitting said tracks to be shifted laterally relatively to said frame.

11. In a device of the character described, the combination with a frame, of rollers for supporting the said frame, tracks for said rollers, means for raising the frame to permit the tracks to be moved, and supporting

means for the tracks carried by said rollers when the frame is raised.

12. In a device of the character described, the combination with a frame, of rollers on the frame, tracks on which rollers travel connected with said frame, and means for permitting said tracks to be shifted diagonally relatively to said rollers.

In witness whereof, I have hereunto subscribed my name in the presence of two witnesses.

FRANCIS M. JOHNSON.

Witnesses:
W. PERRY HAHN,
M. R. ROCHFORD.