Feb. 17, 1953 W. L. ENGHAUSER 2,628,441

CAM OPERATED SELF-CLOSING GATE

Filed March 12, 1951 2 SHEETS—SHEET 1

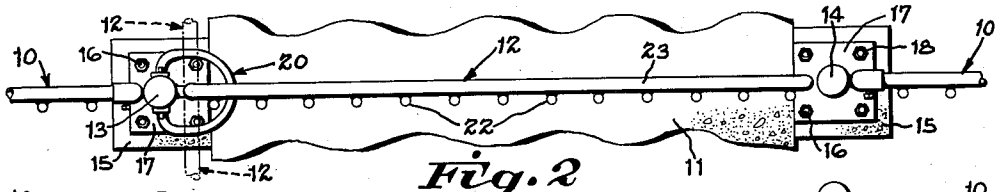

Fig. 2

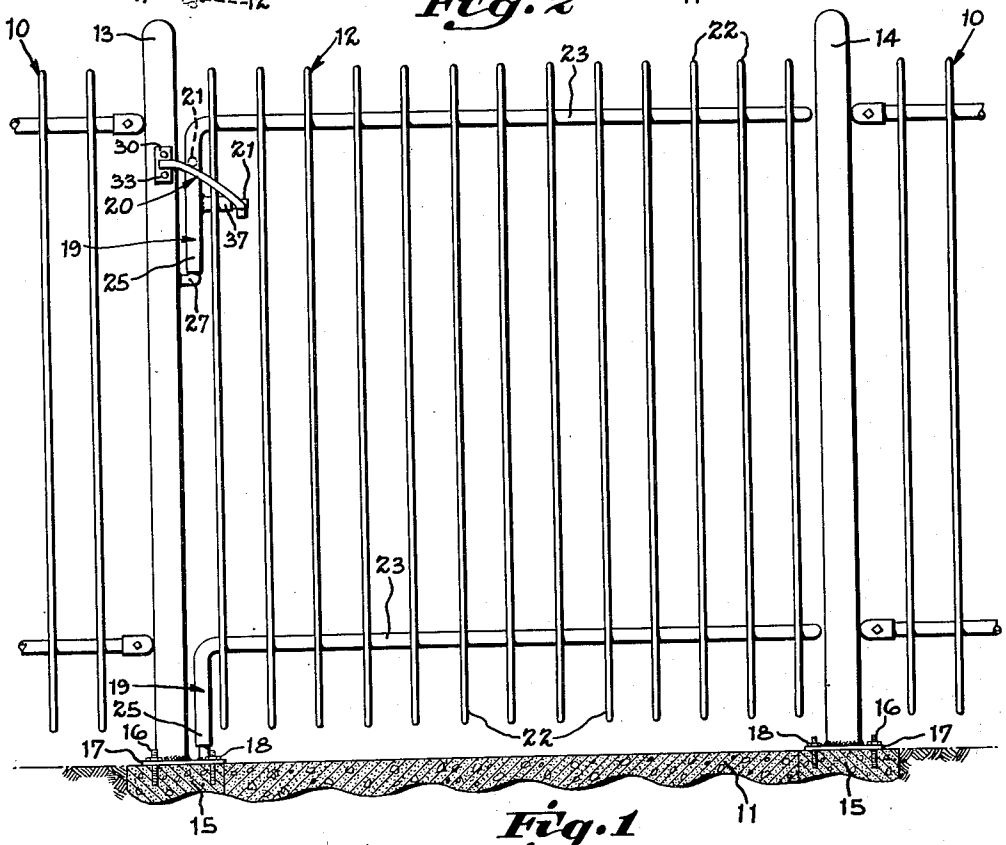

Fig. 1

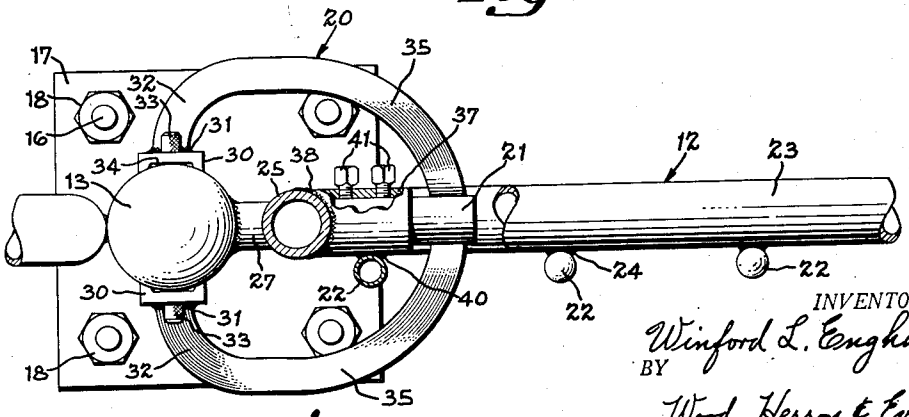

Fig. 3

INVENTOR.
Winford L. Enghauser.
BY
Wood, Herron & Evans.
ATTORNEYS.

CAM OPERATED SELF-CLOSING GATE

Filed March 12, 1951 2 SHEETS—SHEET 2

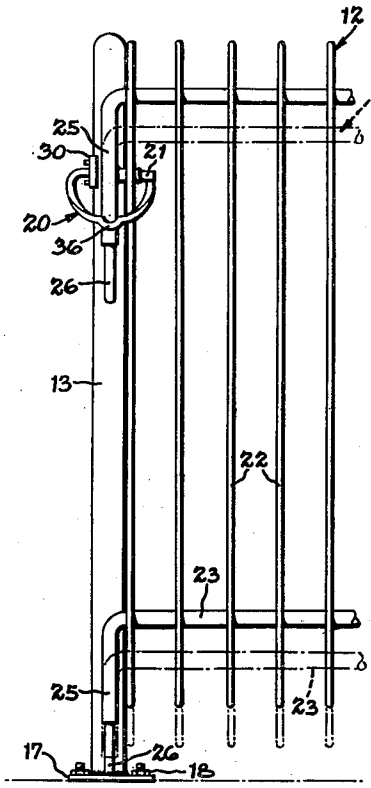

Fig. 4

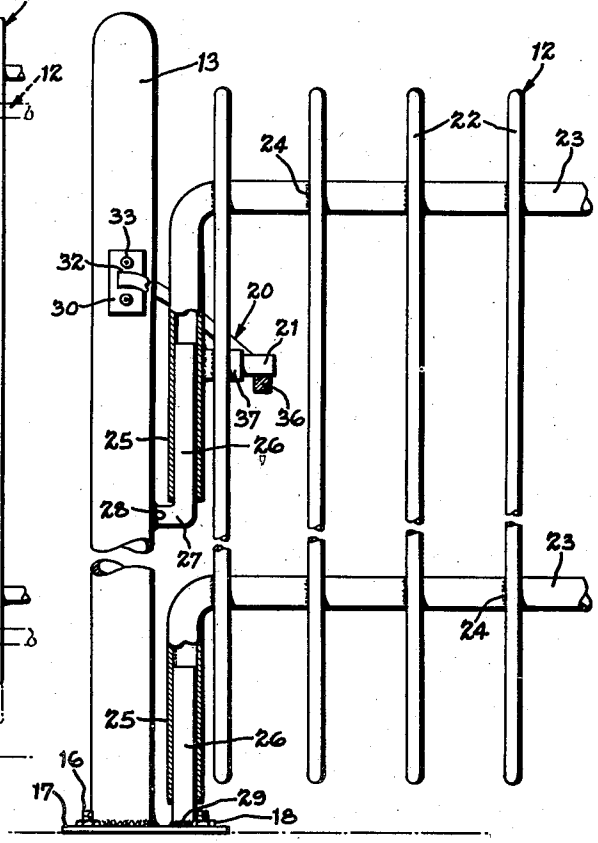

Fig. 5

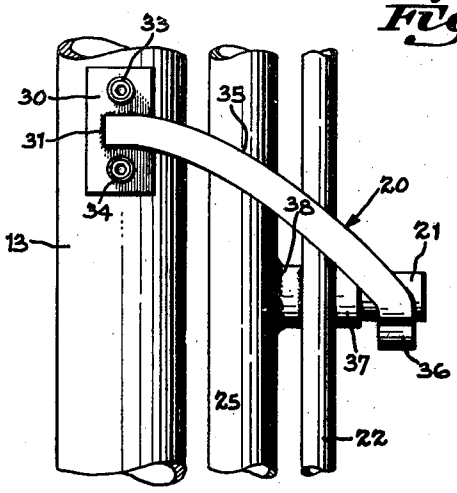

Fig. 6

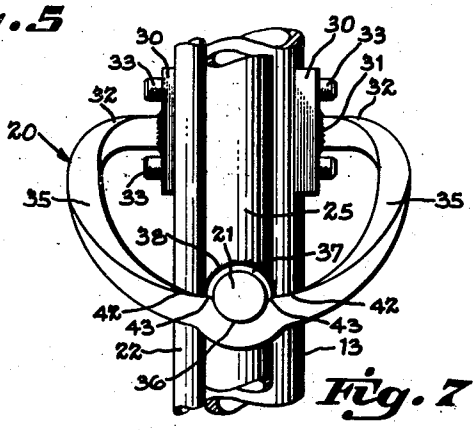

Fig. 7

INVENTOR.
Winford L. Enghauser.
BY
Wood, Herron & Evans.
ATTORNEYS.

Patented Feb. 17, 1953 2,628,441

UNITED STATES PATENT OFFICE

2,628,441

CAM OPERATED SELF-CLOSING GATE

Winford L. Enghauser, Cincinnati, Ohio

Application March 12, 1951, Serial No. 215,140

4 Claims. (Cl. 39—55)

1

This invention relates to an improved self-closing walkway gate for general use about the suburban home, country estate, farm, and other fence enclosed lands. More particularly, the invention is embraced in a gate structure arranged to be swung open in either direction and which will swing to a closed position automatically under the influence of gravity when released.

The usual self-closing farm gate is strictly a functional affair which serves the purpose of excluding the farm animals from the garden and other cultivated areas. In most cases they are operated by weights and bear against a positive stop when closed so that they can be opened only in one direction. When a person approaches the gate in the direction of swing, there is no particular difficulty in pushing against the gate to open it. However, when approaching from the opposite side, it is necessary to open the gate by grasping it and stepping back to swing it to its open position, thereby causing a great deal of inconvenience at times.

Gates have been proposed which are free to swing in either direction so that the person approaching from either side can push the gate in the direction of travel. Such gates are either provided with springs or with weights but these arrangements fail to latch the gate firmly in a closed position because the yieldable device is relaxed when the gate is closed. In other words, there is a lack of resistance which allows the gate to swing in the wind and permits animals to squeeze through the partially open gate or to enter by pushing against it. Manually operated latches have been applied to such gates in order to latch them automatically in their closed positions, but again, this is undesirable because the latch must be operated by hand in order to enter the premises, thus defeating the automatic operating feature.

One of the primary objects of the invention, therefore, has been to provide a self-closing gate of simple construction and easy operation which utilizes a cam and follower to swing the gate to a closed position by gravity in either direction, and to provide in the cam, a latching recess which will latch the gate precisely in closed position, but which will allow the gate to yield under a firm pressure to allow it to be opened when a person pushes against it. The latching recess is arranged to operate with equal resistance in either direction and while providing a positive holding action to maintain the gate in alignment with the posts, nevertheless, it yields with sufficient ease to allow the average person or child to open the gate without much exertion.

2

Further objects have been to provide a gate of simplified construction formed of tubular palings and stringers with the stringers bent downwardly at the hinged end of the gate to provide sockets for establishing a telescopic engagement with cooperating hinge pins mounted upon the gate post, thereby, eliminating extraneous hinge elements; also to provide by such structure a weather protected bearing which will retain a lubricant over long periods of time and thereby promote operating ease.

Briefly the structure consists of a gate having elongated hinge sockets as described above, telescopically arranged on elongated hinge pins which permit the gate to be elevated bodily, combined with a cam having tracking surfaces converging upwardly in opposite directions from a central point corresponding to the closed position of the gate, with a cam follower mounted upon the gate and tracked upon the cam. The follower imposes the weight load of the gate upon the cam and is arranged to swing in an arc upon the cam surfaces when the gate is swung in either direction and thereby raise the gate bodily as it swings open. The upwardly inclined cam tracks cooperate with the telescopic hinge connection to allow the gate to rise as the follower tracks upwardly upon the cam tracks, and the angulation of the tracks is such that the follower will ride downwardly under gravity with sufficient force to close the gate when it is released. The follower rides down the cam track until it reaches the intersection of the converging tracks and at this point, the cam is provided with a semi-circular latching recess into which the follower drops. In this position the gate is restrained against movement in either direction and can be opened only by applying sufficient force to overcome the detent effect of the latching recess.

The gate is intended to harmonize in appearance with a fence constructed of palings and stringers duplicating the gate so that the installation presents a trim ornamental appearance, but being of inexpensive construction. The structure is light in weight for ease of operation, and being of welded construction, it constitutes a rigid unit which is capable of long service without attention. The cam follower is the principal part subject to wear and it is arranged to be adjusted or replaced in a very simple manner if it shows signs of wear after prolonged service.

Other features and advantages of the invention will be more fully disclosed in the following detailed description taken in conjunction with the drawings.

In the drawings:

Figure 1 is a general elevation of the improved gate structure mounted in a gateway, illustrating the gate mounting and cam arrangement.

Figure 2 is a top plan view projected from Figure 1, further illustrating the general arrangement of the parts.

Figure 3 is an enlarged fragmentary top plan view illustrating the cam and follower and its relationship with the gate structure.

Figure 4 is a fragmentary view taken at right angles to Figure 1 showing the gate swung to its open position and showing in broken lines the normal level of the gate in its closed position.

Figure 5 is an enlarged fragmentary view similar to Figure 1 detailing the hinge structure and the relationship of the gate closing cam and follower.

Figure 6 is an enlarged fragmentary side view further detailing the gate closing cam and its follower.

Figure 7 is a front view projected from Figure 6 illustrating the cam contour and latching recess.

Described generally in conjunction with Figures 1 and 2, the improved gate structure is shown in its closed position installed in a gateway, portions of a fence being indicated generally at 10—10 at opposite sides of a walkway 11. The fence follows generally the construction of the gate 12 to provide a neat and trim appearance harmonizing with the gate. The gate is hung upon the gate post 13 and swings with respect to the gate post 14, and the fence sections 10—10 are anchored respectively to the gate posts 13 and 14. These posts are mounted upon concrete footings 15—15 by means of anchor bolts 16 having their lower ends anchored in the footing and in their upper ends extending through the mounting plates 17—17 which are welded to the lower ends of the posts 13, 14. The mounting plates are clamped rigidly upon the footings by the nuts 18 threaded upon the anchor bolts.

The gate 12 is pivotally mounted to the gate post 13 by means of the hinge connections indicated generally at 19—19 at the upper and lower portions of the gate and is held normally in closed position by operation of the gate closing cam 20 which is fixed to the gate post and traversed by a cam follower 21 secured to the hinged portion of the gate. The follower is arranged to swing in an arc with respect to the cam upon pivotal movement of the gate. When the gate is swung toward an open position in either direction, the follower is forced upwardly along the inclined face of the cam and the hinge connections 19—19 are telescopic so that the weight load of the gate is imposed upon the cam by the follower, causing the gate to be elevated as it swings open. Upon release of the gate therefore, the follower will swing it by gravity downwardly with respect to the cam track until it reaches its closed position. The two open positions of the gate are indicated in broken lines in Figure 2 and the position of the cam follower indicated in broken lines in Figure 1 corresponds to the open position.

Described in detail, the gate 12 is of simple construction and consists essentially of a series of vertical tubular palings 22 secured to a pair of horizontal stringers 23—23 which are related at right angles to the palings at the top and bottom of the gate. The palings are joined to the stringers preferably by welding as at 24 (Figures 3 and 5) at the point of intersection between the palings and the stringers. The stringers are formed of tubular stock and at the hinged side of the gate they are bent downwardly to form elongated hinge sockets 25—25. These sockets are telescopically engaged upon the elongated upwardly extending hinge pins 26—26 (Figure 5) which are parallel with and spaced from the gate post 13. The upper hinge pin includes a right angular extension 27 at its lower end which is welded as at 28 to the gate post and the lower hinge pin is welded as at 29 directly to the base plate 17.

The gate structure is exceptionally simple and rigid and is inexpensive to manufacture on a production basis. By forming the hinge sockets in this manner, the stringers themselves form the hinge elements and thereby eliminate the use of additional hinge members.

The telescopic engagement of the downwardly facing sockets 25 upon the hinge pins 26 provides a pivotal mounting and at the same time allows vertical movement of the gate as it is swung in either direction from its closed position so that the weight load of the gate is imposed by the cam follower 21 upon the cam for operating the gate. In addition, the downwardly facing socket members protect the hinge connection from the weather since the upper ends of the sockets are closed and sealed with the result that lubrication may be applied to the hinges and is protected from being washed away by rain.

The gate closing and latching cam 20 is best illustrated in Figures 3, 6 and 7 and as viewed in Figure 3, it consists of a track encircling the pivotal axis of the hinge pins on a radius which corresponds generally to the radius described by the cam follower 21. Cam 20 is secured upon the gate post by means of mounting blocks 30—30 which are secured preferably by welding as at 31 to the inturned limbs 32—32 of the cam. The mounting blocks straddle the gate post and are secured upon opposite sides of it by means of the screws 33 which pass through the blocks into the gate post. The surface of the blocks which seat against the gate post are recessed as at 34 (Figure 3) to provide a nested engagement upon the cylindrical contour of the post.

As viewed in Figures 6 and 7, the cam preferably is formed of bar stock bent to provide a pair of upwardly inclined tracks 35—35 which extend upwardly in opposite directions from the latching recess 36 to the limbs 32—32. When the gate is in closed position, the cam follower resides in the latching recess and upon being pushed in either direction, the cam follower is forced out of the recess and is caused to slide up the inclined tracks. Since the follower is rigidly attached to the gate, this motion will cause the gate to be lifted bodily with respect to the pivot pins from the lowered position of Figure 1 when closed to the elevated position shown in Figure 4 when fully opened. Upon release, the cam follower which bears the weight load of the gate, will slide down the inclined track and thus close the gate by gravity and upon reaching the latching recess, the follower will drop into the recess to latch the gate in closed position.

The latching recess is approximately semicircular as viewed in Figure 7 and is formed on a radius corresponding to the cam follower 21. Since the weight load of the gate is imposed upon the follower, an initial resistance to gate opening movement is applied to the follower. This resistance is sufficiently great to prevent the gate from swinging open under slight pressure, but will allow it to be swung when a person approach-

ing the gate pushes against it firmly. Thus the cam arrangement eliminates the need of a manually operated latch and permits a person entering the gate simply to push against it to gain entrance and then to allow it to swing automatically to closed position after passing through.

As best shown in Figure 3, the follower **21** consists of a short cylindrical bar which is mounted in a sleeve **37** extending at right angles from the upper socket **25** and welded to the socket as at **38**. In order to increase the rigidity of the sleeve, its intermediate portion is welded as at **40** to the paling **22** adjacent the socket. The follower bar is locked in position within sleeve **37** by means of the set screws **41—41** passing through the sleeve into frictional engagement with the follower bar. The follower **21** preferably is formed of a relatively soft material such as brass to reduce friction in its sliding movements upon the cam which may be formed of steel. In case the follower becomes worn after long service, the set screws **41** may be loosened to allow it to be rotated sufficiently to present an unworn portion of its circumference to the cam track. Also, if necessary, the follower can be turned end for end and replaced in the sleeve if its operating end becomes excessively worn.

A compact efficient structure is provided by the arrangement of the cam about the axis of the hinge pin, combined with the radial disposition of the cam follower and the direct mounting of its sleeve upon the hinge pin socket. By this arrangement the hinge structure is nested within the cam while the cam follower, which is mounted directly upon the socket and resting directly upon the cam, is of short and rigid construction. Construction and assembly of the gate is simplified since the parts can be fabricated separately on a mass production basis without matching or individually fitting the parts. Also, the gate can be readily applied or removed since it is slipped directly upon the hinge pins and supported vertically by direct engagement of the follower upon the cam.

The use of the cylindrical follower, combined with the semi-circular latching recess, produces a detent action which substantially eliminates any looseness when the gate is in latched position by virtue of the close fit of the follower within the recess. This aids in preventing the gate from being shaken open by the wind or by any slight pressure other than a reasonably firm thrust and even if accidently displaced, the gate will swing immediately by gravity back to its latched position. The simple tubular construction of the gate itself provides a rigid structure, sufficiently light in weight, which in conjunction with the cam arrangement, is exceptionally easy to operate in spite of the detent operation of the latching recess.

It will be observed in Figure 7, that the tracks **35—35** are inclined upwardly upon slopes which are rather slight in the areas **42—42** immediately adjacent the latching recess. These slightly inclined slopes merge gradually with the tracks **35—35** which are of constant pitch and allow the gate to gain momentum during its initial opening movement. This allows the gate to be opened more easily by increasing the resistance more uniformly as the rate of swing increases. This also eliminates to a certain extent the shock or slamming of the gate in closing since these areas tend to slow it down as it approaches the latching recess.

It will also be noted that the latching recess is rounded as indicated at **43—43** at the juncture of the recess and tracks to reduce somewhat the detent effect of the recess. The length of the gate is many times greater than the length of the follower and thus operates as a lever to reduce proportionately the resistance developed by the recess and cam tracks. Thus, even though the recess holds the gate latched firmly, this leverage effect allows the gate to be opened easily by applying a steady push against its swinging end.

While the structure is disclosed as a preferred embodiment in conjunction with an outdoor gate, it will be apparent that the arrangement without substantial change can be applied to other closures such as doors and other swinging barriers, either for outdoor or indoor use, in which a reliable and easy acting closing and latching operation is desirable.

Having described my invention, I claim:

1. A self-closing gate structure comprising, a gate having upper and lower horizontal stringers formed of tubular stock, the said stringers having end portions which are bent downwardly substantially at right angles to form vertical sockets at the hinged side of the gate, said sockets being of substantial length and having closed upper ends and open lower ends, a gate post having upper and lower vertically projected hinge pins of substantial length extending telescopically into the said sockets to pivotally mount the gate upon the gate post, the gate being movable vertically with respect to the gate post by virtue of the telescopic engagement of the sockets upon the hinge pins, a cam mounted upon the gate post having a generally circular contour surrounding the axis of the hinge pins, the said cam having a tracking face which is inclined upwardly in opposite directions from a point corresponding to the line of the gate in closed position, the inclined tracking face of the cam extending upwardly from an elevated horizontal plane which substantially bisects the said vertical upper socket and a cam follower mounted upon the upper socket and extending in said elevated horizontal plane in tracking engagement with the tracking face, the follower being arranged to support the weight load of the gate whereby the gate is elevated with respect to the hinge pins by operation of the cam upon being swung to an open position in either direction, the downwardly inclined tracking surfaces being arranged to cause the gate to swing automatically to a closed position upon being released from an open position.

2. A self-closing gate structure comprising, a gate post, upper and lower upwardly extended hinge pins having a substantial length mounted substantially parallel with and spaced from the gate post, a gate having upper and lower downwardly facing sockets having a substantial length telescopically engaged upon the said hinge pins to pivotally mount the gate upon the gate post, each of said sockets having a closed upper end weather sealing the bearing surfaces of the hinge pins and sockets, the gate being movable vertically with respect to the gate post by virtue of the telescopic engagement of the sockets upon the hinge pins, a cam mounted upon the gate post having a tracking face encircling the pivotal axis of the hinge pins, the tracking face being inclined upwardly in opposite directions from a central point corresponding to the line of the gate in closed position, the inclined tracking face of the cam extending upwardly from an elevated

horizontal plane which substantially bisects the vertical upper socket, a cam follower sleeve having an end secured upon the upper of said sockets at said elevated horizontal plane and extending radially toward said tracking face, a cylindrical cam follower engaged within the said sleeve, releasable clamping means securing the cam follower within the sleeve, the cam follower being movable in an arc upon swinging movements of the gate and being engaged upon the upwardly inclined tracking faces of the cam to support the weight load of the gate whereby the gate is elevated upon swinging movement in either direction from the said closed position and returned to closed position by gravity upon being released.

3. A self-closing gate mechanism comprising a gate post, a base plate at the lower end of the gate post supporting the post in upright position, an upper and lower vertical hinge pin of substantial length, the upper hinge pin having a right angular extension at its lower end secured to the gate post, the lower hinge pin having its lower end secured to the base plate, whereby both of said hinge pins are mounted substantially parallel with and spaced from the gate post, a gate having an upper and lower vertical hinge socket secured along one side edge thereof, the hinge sockets having open lower ends and being telescopically engaged upon said hinge pins pivotally mounting the gate with respect to the gate post, the sockets having closed upper ends weather sealing and bearing surfaces of the hinge pins and sockets, the gate being movable vertically with respect to the gate post by the telescopic engagement of the hinge sockets with respect to the hinge pins, a cam mounted upon the gate post, the cam having a tracking face which is inclined upwardly in opposite directions from a central point corresponding to the line of the gate in closed position, the upwardly inclined tracking face extending upwardly from an elevated plane which substantially bisects the upper vertical hinge socket, and a cam follower having an end secured to the upper hinge socket and extending horizontally therefrom the outer end of the cam follower being engaged upon the inclined tracking face of the cam, the cam follower imposing the weight load of the gate upon the tracking face, whereby the gate is elevated by the camming of the follower upon the upwardly inclined tracking of the cam upon being pushed from said closed position in either direction, the gate being returned to closed position by gravity upon being released from said open position by the camming of the follower downwardly with respect to the inclined tracking face.

4. A self-closing gate mechanism comprising a gate post, a base plate at the lower end of the gate post supporting the post in upright position, an upper and lower vertical hinge pin of substantial length, the upper hinge pin having a right angular extension at its lower end secured to the gate post, the lower hinge pin having its lower end secured to the base plate, whereby both of said hinge pins are disposed substantially parallel with and spaced from the gate post, the gate having an upper and lower horizontal stringer formed of tubular stock, the stringers having end portions extended beyond the side edge of the gate, said end portions being bent downwardly substantially at right angles to the horizontal stringers to provide vertical sockets of substantial length, said sockets having open lower ends and being telescopically engaged upon said hinge pins to pivotally mount the gate with respect to the gate post, the sockets having closed upper ends weather sealing the bearing surfaces of the hinge pins and sockets, the gate being movable vertically with respect to the gate post by the telescopic engagement of the sockets with respect to the hinge pins, a cam mounted upon the gate post having a tracking face encircling the pivotal axis of the hinge pins, the tracking face being inclined upwardly in opposite directions from a central point corresponding to the line of the gate in closed position, the upwardly inclined tracking face extending upwardly from an elevated horizontal plane which passes through the vertical extent of the upper socket, and a cam follower having an end secured to the upper socket and extending horizontally therefrom and movable in an arc upon swinging movements of the gate, the outer end of the cam follower being engaged upon the upwardly inclined tracking face of the cam and supporting the weight load of the gate, whereby the gate is elevated by the camming of the follower upon the upwardly inclined tracking face of the cam upon pushing the gate in either direction from said closed position, the gate being swung to said closed position by gravity when released by the camming of the follower downwardly with respect to the inclined tracking face.

WINFORD L. ENGHAUSER.

REFERENCES CITED

The following references are of record in the file of this patent:

UNITED STATES PATENTS

Number	Name	Date
320,929	Goff et al.	June 30, 1885
1,596,388	Barnhart	Aug. 17, 1926
2,086,061	Barr	July 6, 1937