United States Patent [19]

Somers

[11] **Patent Number: Des. 280,796**

[45] **Date of Patent: ** Oct. 1, 1985**

[54] **ELECTRIC HAND DRILL**

[75] Inventor: **Robert I. Somers**, Raleigh, N.C.

[73] Assignee: **Black & Decker, Inc.**, Del.

[**] Term: **14 Years**

[21] Appl. No.: **504,412**

[22] Filed: **Jun. 15, 1983**

[52] **U.S. Cl.** **D8/61;** D8/68

[58] **Field of Search** ..... D8/30, 61, 68, 107, D8/51; 173/163, 169, 170; 81/54, 57.11; 408/124, DIG. 1; 310/50; 222/146 HE; 219/230, 421; 72/391, 453.15

[56] **References Cited**

U.S. PATENT DOCUMENTS

D. 225,300	12/1972	Boldt	D8/68
D. 259,392	6/1981	Elmessaar et al.	D8/68
3,357,275	12/1967	Green, Jr. et al.	D8/68 X
3,652,879	3/1972	Plunkett et al.	408/124 X

FOREIGN PATENT DOCUMENTS

2752208	6/1979	Fed. Rep. of Germany	310/50

OTHER PUBLICATIONS

Black & Decker 302, Jul.-Dec., 1977, cover (back and front), and p. 11.
Sears Catalog of Power and Hand Tools, 1979-1980, (back and front), and pp. 60 and 61.
Shopcraft brochure entitled "Benchtop and Portable Power Tools", copyright 1981, cover (back and front) and unnumbered page.
Skil Consumer Products Catalog, CP-511, dated approximately 1981, cover and pp. 6 and 7.
Shopmate Power Tool Catalog No. 109-72C, date unknown (back and front), and pp. 7 and 8.
Appliance Manufacturer, Sep. 1963, p. 81.
Thor Brochure, date unknown.
Silvo Hardware Company, 1984, cover and p. 8.
Silvo Hardware Company Catalog, 1984, cover and p. 20.
Wen Dealer Catalog CA-1080, cover and p. 4.
Black & Decker Air Tools Catalog No. AT-1, (6.72), cover (back and front) and p. 14.

Primary Examiner—Susan J. Lucas
Assistant Examiner—C. E. Heflin
Attorney, Agent, or Firm—Finnegan, Henderson, Farabow, Garrett & Dunner

[57] **CLAIM**

The ornamental design of an electric hand drill, as shown and described.

DESCRIPTION

FIG. **1** is a right side elevational view of the electric hand drill showing my new design;
FIG. **2** is a left side elevational view thereof;
FIG. **3** is a bottom plan view thereof;
FIG. **4** is a top plan view thereof;
FIG. **5** is a front elevational view thereof;
FIG. **6** is a rear elevational view thereof.
FIG. **7** is a perspective view thereof.

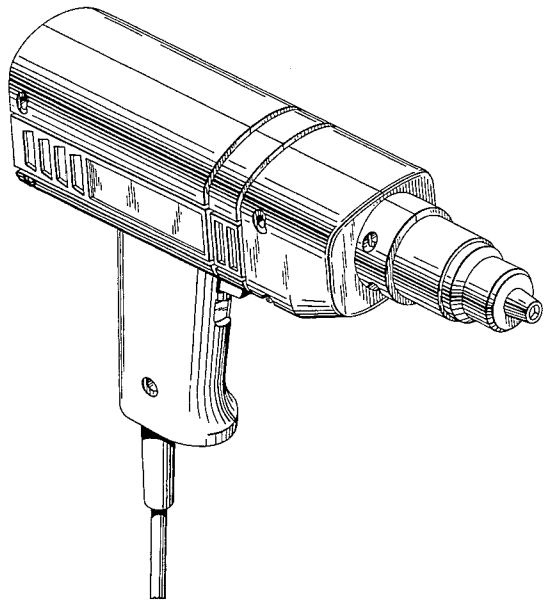

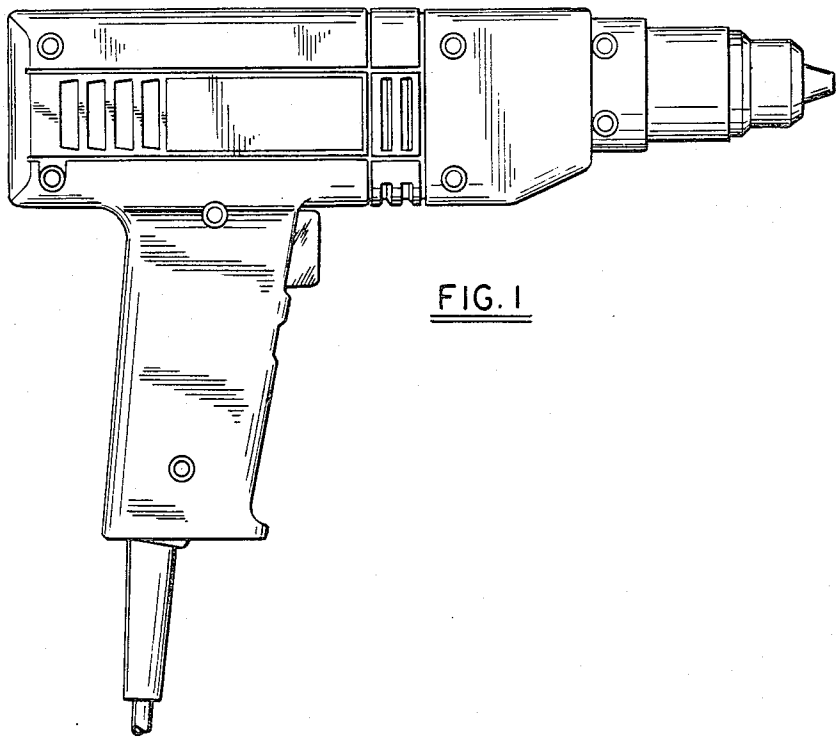

FIG. 1

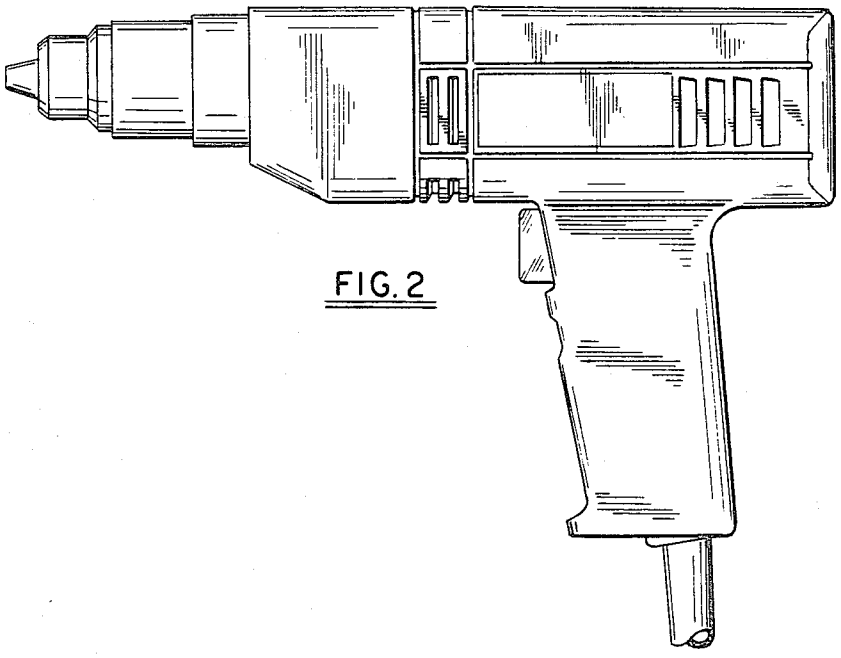

FIG. 2

FIG. 3

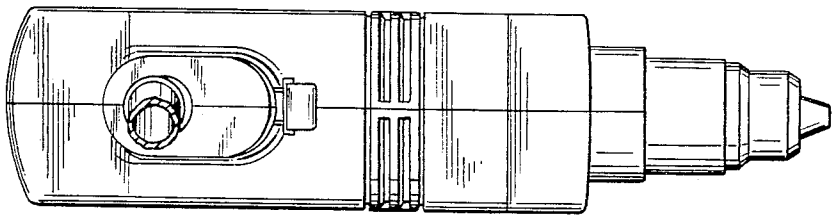

FIG. 4

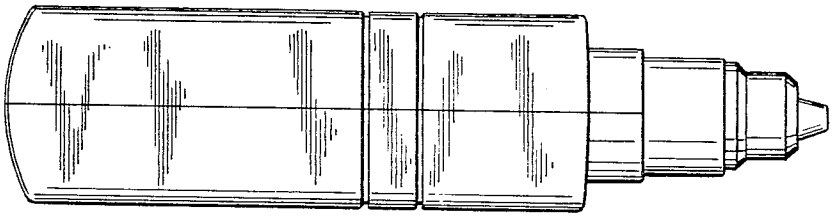

FIG. 5

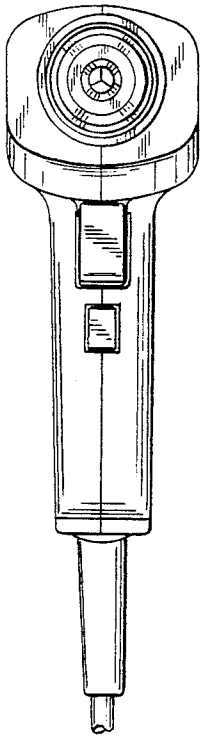

FIG. 6

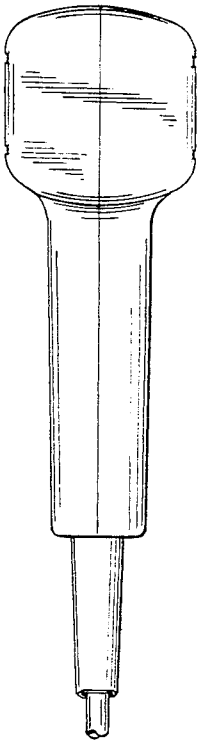

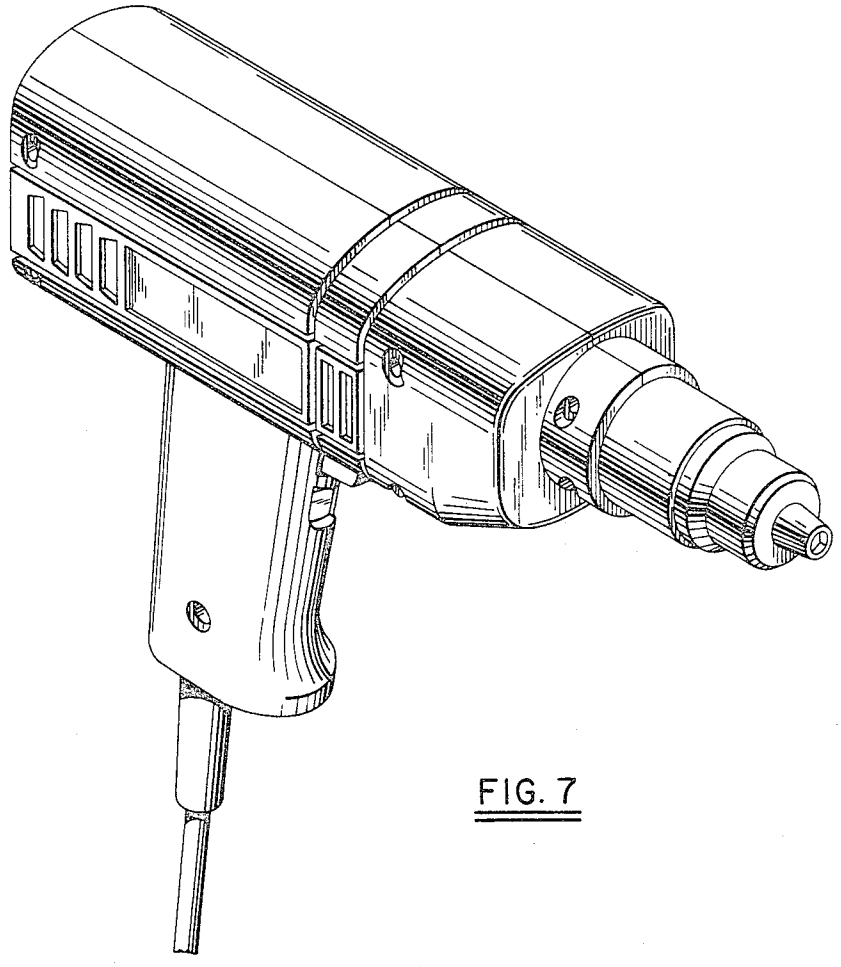

FIG. 7