Nov. 23, 1937. F. C. MOCK 2,100,143

INTERNAL COMBUSTION ENGINE

Filed Oct. 20, 1933 2 Sheets-Sheet 1

Fig. 1

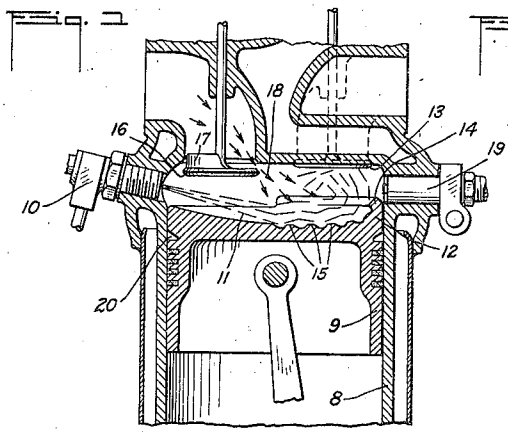

Fig. 2

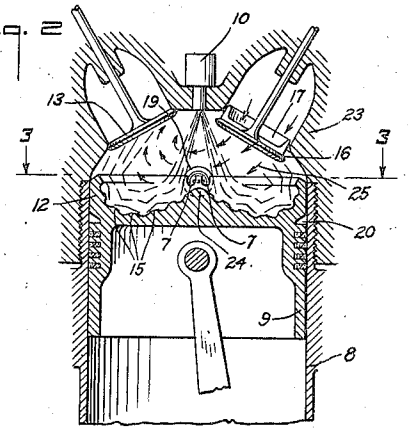

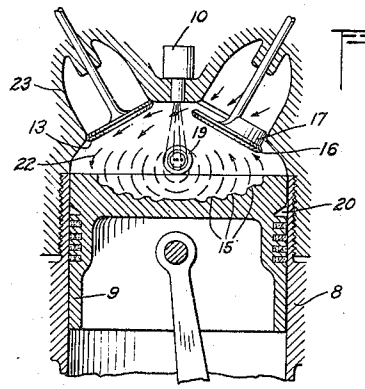

Fig. 6

Fig. 4

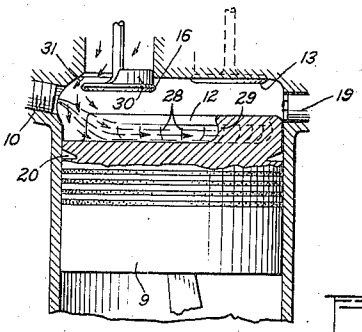

Fig. 3

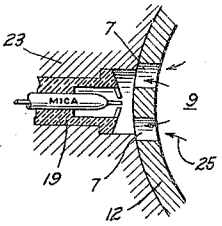

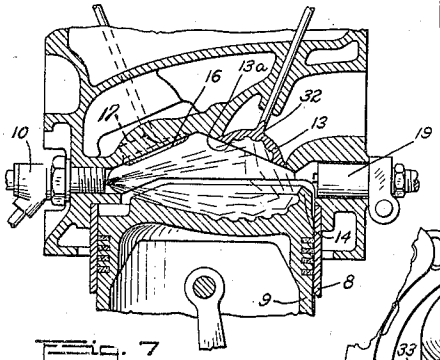

Fig. 7

Fig. 8

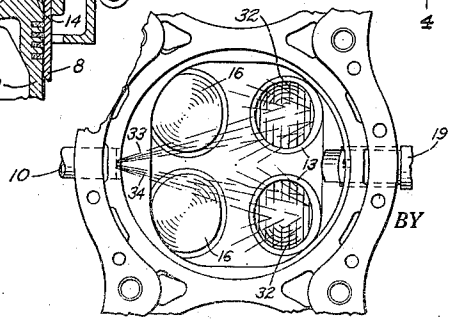

Fig. 5

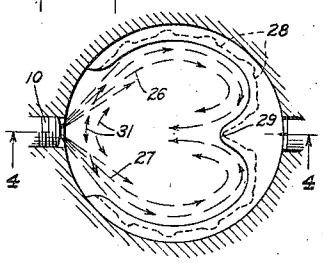

INVENTOR.
Frank C. Mock
BY
Warren T. Hunt
ATTORNEY.

Nov. 23, 1937. F. C. MOCK 2,100,143

INTERNAL COMBUSTION ENGINE

Filed Oct. 20, 1933 2 Sheets-Sheet 2

Fig. 9

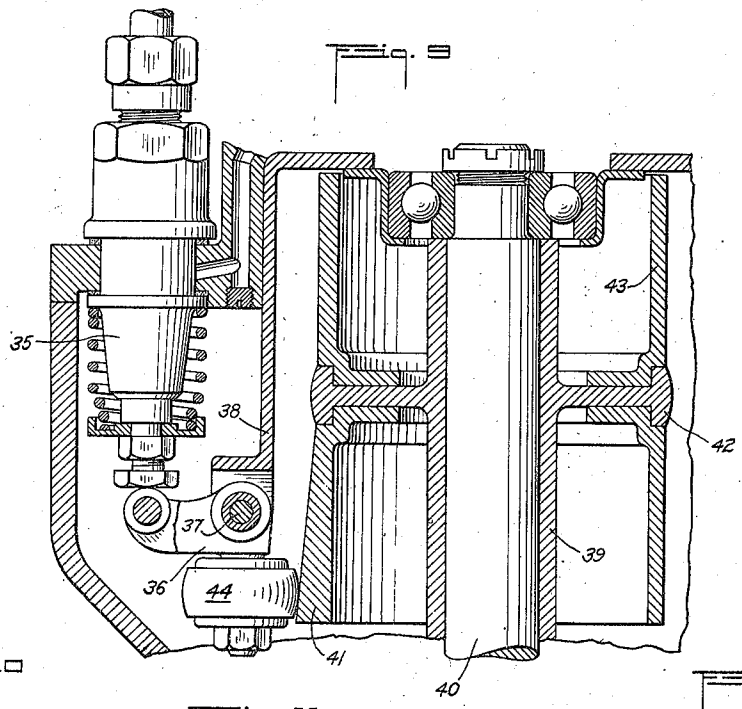

Fig. 10

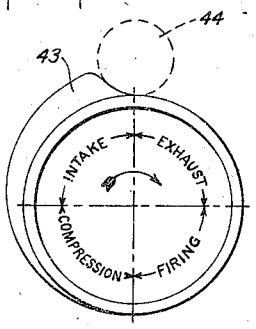

Fig. 11

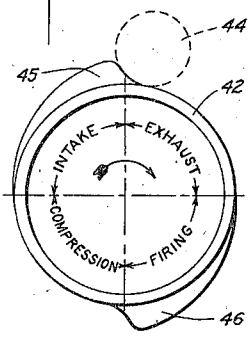

Fig. 12

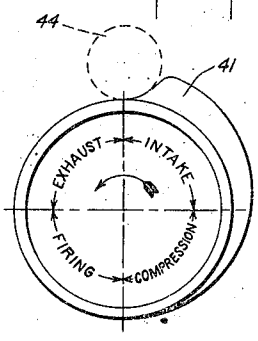

Fig. 13

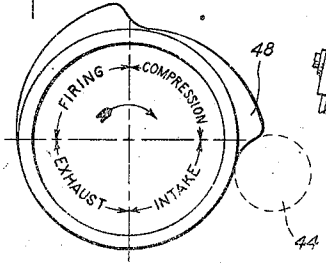

Fig. 14

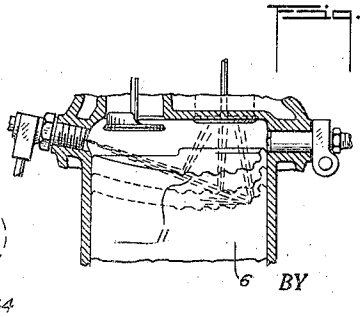

INVENTOR.
Frank C. Mock
BY Warren P. Hunt
ATTORNEY.

Patented Nov. 23, 1937 2,100,143

UNITED STATES PATENT OFFICE

2,100,143

INTERNAL COMBUSTION ENGINE

Frank C. Mock, Montclair, N. J., assignor to Eclipse Aviation Corporation, East Orange, N. J., a corporation of New Jersey

Application October 20, 1933, Serial No. 694,483

19 Claims. (Cl. 123—32)

This invention relates to internal combustion engines and more particularly to engines of the type employing fuel injection.

Several attempts have heretofore been made to design an internal combustion engine of the type employing fuel injection, in such a manner as to secure efficient operation thereof with fuels of the less volatile type, and in certain of the prior constructions, the injected fuel has been directed to impinge upon a reciprocating engine element normally heated to a relatively high temperature during operation. A fuel spray thus directed, it was thought, materially increased the degree and rate of vaporization of the fuel by reason of the heat abstracted from such engine element. In such prior instances, however, it has been determined that the increase in the vaporization of the fuel has not been appreciable, this being due to the fact that a large portion of the fuel, injected upon the engine element at a relatively high velocity, was not reflected from said element in the manner supposed, but skidded across said element into contact with the relatively cool cylinder wall, to which the fuel adhered in liquid form. The angle of reflection of the directed fuel, it has been found, is less than 10 degrees regardless of the angle of incidence, so that the fuel turbulence and evaporation created in the structures heretofore referred to have not given the results desired. Not only have the desired results in the nature of increased vaporization of the fuel charge not been obtained, but there has been an increase in the carbon deposits in the engine cylinders and impairment of lubrication due to the liquid fuel adhering to the cylinder wall.

One of the objects of the present invention is to provide a novel method and means for securing more rapid and complete evaporation of the fuel charge in engines of the type utilizing an injected charge of fuel in order to avoid the above difficulties.

Another object of the invention is to provide a novel internal combustion engine construction wherein certain of the engine elements heated by the combustion of the fuel are employed for rapidly evaporating successive fuel charges and effecting, in a relatively short interval of time, a homogeneous and thoroughly vaporized mixture thereof with the air charge drawn into the engine, whereby the latter may be operated efficiently at high speeds.

Still another object is to provide in an engine of the above character, a novel construction wherein the fuel spray is directed onto highly heated engine elements, thus not only effecting a more rapid evaporation of the fuel but also enabling such elements to be maintained at a relatively lower temperature resulting in a material increase in the capabilities and performance of high powered engines.

Another object is to provide an internal combustion engine wherein the fuel spray is directed upon a heated engine element and wherein the intake and exhaust ports of the engine are so arranged with respect to each other and to the fuel spray as to effect an unusually rapid evaporation of fuel and mixture thereof with air.

Another object is to provide in an internal combustion engine of the above character, a novel method and means for confining the injected spray of fuel between surfaces of higher temperature than the cylinder walls until the entrance velocity of the injected fuel has appreciably decreased, thus materially increasing the rate and degree of evaporation of the fuel.

A further object is to provide in an internal combustion engine of the above type, a novel construction whereby the injected fuel and incoming air charge are directed upon the surface of a heated engine element which is so constituted as to direct the fuel and resultant mixture away from the relatively cooler walls of the engine cylinder in order to avoid adherence of liquid fuel to said walls and consequent non-vaporization thereof, such an arrangement serving to increase evaporation of the fuel and enabling efficient operation of the engine upon a relatively lean combustible mixture.

Another object and feature of the invention resides in the provision of a novel surface on one or more of the engine elements normally heated to a relatively high temperature during operation of the engine, whereby the fuel particles of the injected spray, directed upon such element or elements, receive a series of impacts and will thus become more thoroughly vaporized.

A still further object is to provide in an internal combustion engine, a novel method and means for timing the injection of fuel thereto, whereby the same may be injected at various times in the engine cycle for securing most efficient operation during starting and during normal running.

A further object is to provide an internal combustion engine construction of the above character so constituted as to be unusually efficient in operation, light in weight, economical of manufacture and enabling the efficient use of relatively heavy or safety fuels.

Other objects and novel features of the inven-

tion will appear more fully hereinafter from the following detailed description when taken in connection with the accompanying drawings. It is to be expressly understood, however, that the drawings are for purposes of illustration only and are not designed as a definition of the limits of the invention, reference being had for this purpose to the appended claims.

Referring to the drawings, wherein similar reference characters refer to like parts throughout the several views:

Fig. 1 is a vertical sectional view of an internal combustion engine illustrating one form of the invention;

Fig. 2 is a vertical sectional view of an internal combustion engine illustrating another form of the invention;

Fig. 3 is an enlarged sectional view taken on line 3—3 of Fig. 2;

Fig. 4 is a vertical sectional view of an engine constructed in accordance with still another form;

Fig. 5 is a top plan view of the piston of Fig. 4;

Fig. 6 is a vertical sectional view of still another modification;

Fig. 7 is a vertical sectional view of still another modification;

Fig. 8 is a vertical sectional view of the engine shown in Fig. 7;

Fig. 9 is a sectional view of a fuel pump and control therefor;

Figs. 10, 11, and 12 illustrate the control cams for the pump;

Fig. 13 is a view illustrating a modified form of the cam of Fig. 10; and

Fig. 14 is a view of the form shown in Fig. 1 illustrating the deflection of the fuel at various piston positions.

In the operation of internal combustion engines of the type employing injection of the less volatile fuels, rapid and complete evaporation of the fuel charge and consequent rapid absorption of heat is highly desirable and in fact necessary if it is desired to operate the engine efficiently at high speeds. By the present invention, such rapid absorption of heat by the injected fuel spray is obtained by utilizing the heat in the hot exhaust gases in the cylinder at the time of injection; by so positioning the intake and exhaust valves that the air charge is heated not only by the piston and walls of the cylinder but also by the exhaust valve; and by directing the fuel spray against the highly heated surface of the engine piston and/or head of the exhaust valve and maintaining the spray in contact with such surface and away from the relatively cooler cylinder wall until the velocity of the spray, yet unvaporized, has materially decreased.

In utilizing the above features, it has been found that a material increase in the turbulence and evaporation of the fuel charge is obtained by subjecting the fuel spray to a succession of impacts. In certain forms of the invention, such impacts are imparted to the fuel by corrugating or grooving the heated engine element against which the fuel spray is directed. This construction, moreover, serves to increase the angle of reflection of the spray so that the latter will be directed away from the relatively cooler cylinder walls where it would otherwise adhere and remain in an unvaporized condition, causing the disadvantages mentioned above. In addition to the above, the construction referred to, in increasing the evaporation of the fuel, enables the engine element, against which the fuel is directed, to be operated at a temperature lower than that hitherto found possible, thus avoiding the burning and destruction of such elements.

With the above in mind and referring more particularly to Fig. 1 of the drawings, an internal combustion engine embodying the present invention is illustrated therein as comprising a cylinder 8 having a piston 9 reciprocatingly mounted therein. A fuel injecting device 10 is positioned in the side wall of the cylinder in such a manner as to direct a conical spray of fuel against the top of the piston, such spray being indicated by the lines 11, it being noted that the same impinges upon the piston at an angle. In order to abstract the maximum amount of heat from the heated elements of the engine for the purpose of increasing the degree of evaporation and in order to prevent contact between the fuel spray and the relatively cool cylinder wall, a semi-circular fuel deflecting flange 12 is provided upon the top of the piston adjacent the exhaust valve 13, the said flange being provided with an inwardly turned ledge or lip 14 for directing the fuel spray upwardly against the exhaust valve and away from the cylinder wall as shown. The surface of the top of the piston enclosed by said flange is provided with corrugations or ribs 15 arranged transversely to the direction of the fuel spray 11 and the corrugated or ribbed portion is preferably gradually curved upwardly to the flange 12, it having been determined that such a construction not only increases the effective heating surface for evaporating the fuel, but also prevents the fuel from skidding across the top of the piston where it would otherwise contact the relatively cool cylinder wall and remain thereon in a liquid condition. This arrangement, moreover, subjects the fuel spray to a plurality of impacts thus enabling a more efficient vaporization of the fuel.

It may be noted from Fig. 14 that as the piston 6 reciprocates in the cylinder, the oblique spray 11 impinges against different serrations or grooves throughout the piston travel and that the spray of fuel is diffused throughout the entire combustion chamber by virtue of the variations in angle of incidence.

In order to control and efficiently direct a charge of air into said cylinder to form therein a homogeneous combustible mixture for the fuel spray, there is provided an intake valve 16 positioned adjacent the fuel injecting means 10. Preferably, such valve is provided with a shroud or directing flange 17 for the purpose of conducting the incoming charge of air directly upon the heated corrugated portion of the piston, as indicated by the arrows 18, whereby the fuel spray will meet the whirl of air, become intimately mixed therewith, and will be directed against the heated head of the exhaust valve 13 as hereinbefore described. It will be noted that suitable ignition means 19 have been provided for igniting the resultant combustible mixture and that such means are positioned in the cylinder wall opposite the fuel injecting device, so that the fuel spray is directed generally toward the ignition means, thus enabling ready combustion of the fuel during operation of the engine. A further feature resides in the provision of means for enabling the top of the piston 9 to be maintained at a higher temperature than the remaining portion of the piston during operation. Such means in the form shown comprises an open groove 20 in the piston adjacent the top thereof, it being apparent that such groove appreciably decreases the

heat conductivity between the top of the piston and the remaining portion thereof, which latter presents a substantial surface to the relatively cool walls of the cylinder.

Referring to Fig. 2, the modification illustrated therein is embodied in an engine utilizing center fuel injection. As shown, the cylinder 8 is provided with a dome-shaped head 23 having a fuel injecting device 10 positioned in the center thereof and having also intake and exhaust valves 16 and 13 respectively positioned upon either side of the device 10. The top of the piston is provided with corrugations 15 and a flange 12 as heretofore with the exception, however, that the entire top of the piston is corrugated and the flange extends completely around the piston head. The latter is preferably gradually curved upwardly in the central portion thereof into the form of a rounded cusp 24, while the flange 12 is gradually curved into the piston head as shown. In this form, the intake valve is preferably provided with a shroud or deflecting flange 17 positioned in such a manner that the incoming charge of air will be directed tangentially into the cylinder, as indicated by the arrows 25, thus effecting a spiral whirl of combustible mixture about the central portion 24 of the piston. With this arrangement, as the piston travels downwardly during the suction stroke, it will be apparent that the air charge will be directed toward successive portions of the piston head with its accumulated fuel in order to insure an intimate mixture. Suitable ignition means 19, which may comprise a combined heater and spark plug for starting and normal running respectively, is provided in the side of the dome-shaped head 23.

The flange 12 of the piston 8 shields the combined heater and spark plug 19 from the direct path of the whirling gases at the top of the piston stroke, but is preferably cut away at 7 to provide indirect communication between the cylinder and plug.

In the form of the invention illustrated in Figs. 4 and 5, the construction is such that an air whirl is created with a double vortex movement of fuel and vapor. To this end, the piston head is provided with a flange 12 extending around the piston but terminating upon either side of the fuel injecting device 10 and the fuel issuing from the latter is divided into two sprays, 26 and 27 respectively, which are directed toward the end portions of said flange, see Fig. 5. In order to increase the heating surface with which the fuel spray contacts and in order also to increase the number of impacts between the fuel and the flange, the latter is provided with corrugations or ribs 28 arranged transversely to the direction of passage of the fuel. Directly opposite the fuel injecting device 10, the flange is symmetrically curved inwardly in the form of a rounded cusp 29, Fig. 5, to effect the heretofore mentioned double vortex movement of the fuel. The air charge is preferably directed into the paths of the fuel sprays adjacent the fuel injecting devices by means of a shroud or other suitable deflecting device 30 carried by the intake valve 16, the flow of the air charge being indicated by the arrows 31, it being noted that the same is whirled along with each spray as shown in Fig. 5. A suitable combined heating device and spark plug 19 is provided in the cylinder opposite the fuel injecting device 10.

In the form illustrated in Fig. 6, the piston 9 is formed with a cup-shaped depression having corrugations 15 against which the fuel impinges. The intake valve 16 has been turned ninety degrees from the position shown in Fig. 2 whereby the baffle 17 causes the incoming air to intersect the fuel spray and be directed past the exhaust valve 13 and downwardly against the corrugations in a whirl as indicated by arrows 22. This both cools the exhaust valve and applies the heat so abstracted toward vaporization of the fuel. It will be noted that in the form illustrated in Fig. 6, the spark plug 19 is located substantially at the axis of the swirling mixture and therefore the mixture will have less cooling action on the spark plug. The fuel to air ratio will also be higher in the region of the spark plug with a resultant improvement in ignition.

In the forms of the invention heretofore described, the corrugated or ribbed heated engine element against which the fuel spray has been directed has taken the form of the engine piston. Figs. 7 and 8 illustrate a construction wherein another heated engine element may be employed for aiding in the vaporization of the fuel, such element being the engine exhaust valve 13. As shown, two exhaust and two intake valves, 13 and 16 respectively, are employed and the head of each exhaust valve is concave and is provided with corrugations or ribs 32 arranged substantially transversely to the direction of the angularly related fuel sprays 33, 34 issuing from the fuel injecting device 10, see Fig. 7. Each valve is also provided with an inwardly turned lip 13a which is similar in function to the lip 14 on the piston. In this arrangement, the sprays, after impinging against the exhaust valve heads, are deflected against the heated piston head, thus abstracting heat from not only the exhaust valve but also the top of the piston, thereby enabling a complete and rapid vaporization of the fuel and permitting these engine parts to be maintained at a relatively lower temperature than heretofore. By the provision of the lip 13a, any possibility of the fuel being deflected onto the cylinder wall is avoided. A suitable ignition device 19 is positioned in the cylinder opposite the fuel injecting nozzle 10.

Means are provided by the present invention for variably timing the injection of fuel into the engines heretofore described in order to obtain efficient operation during starting and also during running in either a clockwise or counter-clockwise direction. As shown, Figs. 9 to 12, such means are constituted by a fuel pump 35 adapted to be connected with the fuel injecting devices 10 and having an operating member 36 pivotally mounted as at 37 to a portion of the fuel pump casing 38. Movement of the operating member to actuate the fuel pump is effected by means of a rotatable member 39 drivably connected in any suitable manner to a rotatable engine driven shaft 40. Such rotatable member is provided with a plurality of cam members 41, 42, and 43 and this assembly is so arranged with respect to the shaft 40 as to be adjustable axially thereof in order to selectively bring any of the cam members into operative relation with a cam roller 44 on the operating member 36 in order to effect operation of the latter.

As shown in Fig. 10, the cam 43 when in operative engagement with the roller 44 will effect proper injection of fuel for normal running of the engine in a clockwise direction, while Fig. 12 illustrates the profile of cam 41 for operating the fuel pump in order to secure proper injection during normal running of the engine

in a counterclockwise direction. Fig. 11 illustrates the profile of the starting cam **42**, wherein it will be noted that two lobes **45** and **46** may be provided for effecting injection of fuel into the cylinder against a heated element therein as heretofore described, at the beginning of the suction stroke and at the top of the firing stroke. Such an arrangement permits ready starting of the engine and enables the latter to pick up its load efficiently. After the engine has been started and is running smoothly, the member **39** may be operated in the proper direction to bring either cam **41** or cam **43** into engagement with the roller **44** depending upon the direction of rotation of the engine.

An alternative construction of the starting cam **42** is illustrated in Fig. 13, useful for starting with a warm air charge, wherein it will be noted that an initial injection of fuel may be effected at the beginning of the compression stroke, by means of cam **48**, so that the spray will traverse the cylinder space without striking a cold wall; and a supplementary injection may be also effected by the cam **49** at approximately the top center of the firing stroke.

There is thus provided by the present invention a novel method and means for injecting fuel into the cylinders of internal combustion engines to obtain more rapid and more complete vaporization thereof, thus enabling the efficient use of relatively heavy or safety fuels and realizing higher fuel efficiencies with increased power. The manner in which the injected fuel is directed towards an engine element, normally heated to a relatively high temperature during operation of the engine, and is maintained out of contact with the relatively cool walls of the cylinder, until the velocity of the fuel spray has been materially reduced, enables a substantial amount of heat to be abstracted from such element to secure rapid vaporization of the fuel, and to moreover enable such engine element to remain at a relatively cooler temperature than heretofore. This arrangement also prevents the fuel spray from impinging against the relatively cool cylinder wall, to which an appreciable portion of the spray would adhere and not become vaporized. The provision of the ribbed or corrugated surface of the engine element, against which the fuel spray is directed, not only increases the surface available for evaporation of the fuel, but also subjects the particles of the fuel spray to a series of impacts in order to further break up such particles and effect more complete vaporization thereof. The fuel injection timing arrangement disclosed permits efficient injection of fuel into the engine at various times during the engine cycle to enable ready starting of the engine, and normal running thereof in either direction.

While several embodiments of the invention have been disclosed and described herein, it is to be understood that the invention is not limited thereto, but may be embodied in other forms, as well understood by those skilled in the art. Reference will therefore be had to the appended claims for a definition of the limits of the invention.

What is claimed is:

1. In an internal combustion engine having a cylinder, a reciprocating engine element in said cylinder, said element having an undulating corrugated surface having a series of round corner grooves having prominent edges at the boundary of the grooves and heated to a relatively high temperature by the combustion of fuel in said cylinder, means in the side wall of the cylinder for injecting fuel into said cylinder against the corrugated surface of said element at an oblique angle thereto, and means in the cylinder opposite to the injection means for igniting said fuel.

2. In an internal combustion engine having a cylinder, a piston reciprocatingly mounted therein, a plurality of undulating corrugations provided on the top of said piston the depth of which is less than the width, means positioned in the side wall of the cylinder at an acute angle to the cylinder axis for injecting fuel into said cylinder against said corrugations, and means in the cylinder opposite to the fuel injection means for igniting said fuel.

3. In an internal combustion engine having a cylinder and a piston reciprocatingly mounted therein, intake and exhaust valves in said cylinder, means for injecting fuel into said cylinder, and means for increasing the evaporation of the injected fuel comprising a plurality of corrugations on the top of said piston and against which the fuel is directed, said corrugated portion of the piston being arranged to direct the fuel against said exhaust valve.

4. The combination with a cylinder having a piston reciprocatingly mounted therein, of an intake valve in the top of the cylinder, means for increasing the evaporation of the injected fuel comprising a plurality of undulating corrugations on the top of said piston, a fuel jet in the side wall of the cylinder and inclined at an acute angle with the cylinder axis from which the fuel is directed at an acute angle with the top of the piston, a flange on the piston having an inwardly curved lip for deflecting said fuel upwardly in the cylinder and away from the walls thereof, and deflecting means associated with said intake valve for directing incoming gases toward said flange.

5. In combination with a cylinder having a piston reciprocatingly mounted therein, of intake and exhaust valves for said cylinder, a plurality of corrugations provided on the top of said piston to one side thereof and located directly beneath said exhaust valve, means for injecting fuel into said cylinder against said corrugations during the suction stroke of said piston, and means for deflecting said fuel upwardly and away from the walls of said cylinder so that the fuel will be directed against said exhaust valve.

6. The combination with a cylinder having a piston reciprocatingly mounted therein, of intake and exhaust valves for said cylinder, a plurality of corrugations provided on the top of said piston to one side thereof and located directly beneath said exhaust valve, means for injecting fuel into said cylinder against said corrugations, said means being positioned in a side wall of said cylinder adjacent said intake valve, means associated with said last named valve for directing air toward the corrugations to be intimately mixed with said fuel, and means for deflecting the air and fuel upwardly and away from the walls of said cylinder and against said exhaust valve.

7. In an internal combustion engine having a cylinder and a piston reciprocatingly mounted therein, a plurality of undulating corrugations provided in the top of said piston, said corrugations having a width greater than their depth means for injecting fuel into said cylinder against said corrugations, said fuel injection means being positioned in the side wall of the cylinder and inclined at an acute angle with the cylinder axis, means for igniting said fuel, and said piston hav-

ing a peripheral groove coacting with the cylinder wall to form a closed air space in all positions of the piston for decreasing the heat transfer between the corrugated top of said piston and the remainder thereof, whereby said top will be maintained at a higher temperature than said remainder during operation of the engine.

8. In an internal combustion engine having a cylinder and a corrugated piston reciprocatingly mounted therein, exhaust and intake valves for said cylinder, means for injecting fuel into said cylinder against the top of said piston, an inwardly curved surface on the piston for deflecting said fuel upwardly and away from the cylinder wall to cause said fuel to impinge upon said exhaust valve, and ignition means positioned in the wall of the cylinder opposite said fuel injecting means and adjacent said exhaust valve.

9. In an internal combustion engine having a cylinder and a piston reciprocatingly mounted therein, said cylinder being provided with a dome-shaped head, a plurality of corrugations provided on the top of said piston, fuel injecting means positioned in the center of said head and adapted to inject a conical spray of fuel into said cylinder against the corrugated top of said piston, intake and exhaust valves positioned in said head upon either side of said first named means, means associated with said intake valve and directing air into said cylinder to create a spiral turbulence of air and fuel therein when said valve is open, and means formed on said piston for directing the fuel upwardly and away from the side wall of said cylinder.

10. In an internal combustion engine having a cylinder and a piston reciprocatingly mounted therein, exhaust and intake valves in the upper portion of said cylinder, fuel injecting means located in the side wall of said cylinder adjacent said intake valve, said fuel injecting means being adapted to direct a conical spray of fuel against the top of said piston, and deflecting means positioned in said cylinder adjacent said fuel injecting means and beneath said intake valve, said deflecting means being so arranged as to be scoured by an incoming charge of air when said intake valve is open and to direct said air toward the top of said piston.

11. In an internal combustion engine having a cylinder and a piston reciprocatingly mounted therein, exhaust and intake valves in the upper portion of said cylinder, fuel injecting means located in a side wall of said cylinder adjacent said intake valve, a corrugated fuel deflecting flange formed on the top of said piston and terminating upon either side of said fuel injecting means, said flange being provided with an inverted cusp opposite said first named means whereby fuel sprays directed toward the ends of said flange adjacent the fuel injecting means will create a double vortex, and means associated with said intake valve for directing a charge of incoming air to said fuel sprays.

12. In an internal combustion engine having a cylinder and a piston reciprocatingly mounted therein, an intake valve, an exhaust valve having a concave corrugated head, means for injecting a fuel spray into said cylinder to impinge on said head at an angle, said exhaust valve being so arranged that the fuel will thereafter be deflected toward the top of said piston, and ignition means in said cylinder.

13. In an internal combustion engine having a cylinder and a piston reciprocatingly mounted therein, an intake valve, an exhaust valve having an inwardly cupped corrugated head, means for injecting fuel into said cylinder against the corrugated head of said exhaust valve, the corrugations being arranged to deflect fuel therefrom to the head of said piston, and means for igniting the fuel.

14. In an internal combustion engine having a cylinder and a piston reciprocatingly mounted therein, means for introducing air into the cylinder, means for injecting fuel into said cylinder against the head of the piston, said means being positioned in a side wall of the cylinder, means for increasing the rate and degree of evaporation of the injected fuel comprising a plurality of corrugations on the piston head having a width greater than their depth, means comprising an upwardly extending flange on the piston head and having an inwardly curved lip portion thereon for directing the fuel upwardly in said cylinder and away from the side walls thereof, an ignition device in the side wall of said cylinder, and said flange being arranged to shield said ignition device from the path of the introduced air at the top of the piston stroke.

15. The combination with a cylinder of a piston reciprocating therein, means for introducing air into the cylinder in a rotating mass, an ignition device in the cylinder at substantially the axis of rotation of the mass, and a fuel injection device in the cylinder for directing fuel through the rotating mass.

16. The combination with a cylinder of a piston reciprocating therein, a shrouded valve in the cylinder for introducing air into the cylinder in a rotating mass, an ignition device in the cylinder at substantially the axis of rotation of the mass, and a fuel injection device in the cylinder for directing fuel through the rotating mass.

17. In an internal combustion engine having a cylinder, a reciprocating piston in said cylinder, said piston having an undulating corrugated surface having a series of round corner grooves with prominent edges at the boundary of the grooves which are heated to a relatively high temperature by the combustion of fuel in said cylinder, means in the wall of the cylinder for injecting fuel into said cylinder against said corrugated surface, an intake valve in the head of said cylinder having a deflector for directing incoming air against said grooves whereby the same are caused to heat the air and cause the air to mix with the heated fuel deflected by said grooves, and means in the cylinder wall for igniting said fuel.

18. In an internal combustion engine having a cylinder, a reciprocating piston in said cylinder, said piston having an undulating corrugated surface having a series of round corner grooves with prominent edges at the boundary of the grooves which are heated to a relatively high temperature by the combustion of fuel in said cylinder, said series of grooves being arranged in a surface curving generally upwardly from an intermediate portion of the piston toward an upper peripheral edge of the piston, means in the wall of the cylinder for injecting fuel into said cylinder against said corrugated surface, an intake valve in the head of said cylinder having a deflector for directing incoming air against said grooves whereby the same are caused to heat the air and cause the air to mix with the heated fuel deflected by said grooves, and means in the cylinder wall for igniting said fuel.

19. In an internal combustion engine having a cylinder, a reciprocating piston in said cylinder, said piston having an undulating gen-

erally concave surface having a series of round corner grooves which are heated to a relatively high temperature by the combustion of fuel in the cylinder, means in the cylinder wall of the cylinder for injecting fuel into said cylinder against said corrugating surface, an intake valve in the head of said cylinder having a deflector coacting with the cylinder for directing incoming air to one side of said valve and toward one side of said piston surface whereby the air is caused to swirl adjacent the grooves and the same are caused to heat the air and mix it with the heated fuel deflected by said grooves, and means in the cylinder wall for igniting said fuel.

FRANK C. MOCK.