United States Patent

Metz

[15] 3,641,588

[45] Feb. 8, 1972

[54] ELECTROSTATIC PRINTER

[72] Inventor: Jack L. Metz, Des Plaines, Ill.

[73] Assignee: Teletype Corporation, Skokie, Ill.

[22] Filed: June 10, 1970

[21] Appl. No.: 44,953

[52] U.S. Cl. 346/75

[51] Int. Cl. G01d 15/18

[58] Field of Search 346/75, 140, 1

[56] References Cited

UNITED STATES PATENTS

3,166,752	1/1965	Waterman	346/74
3,298,030	1/1967	Lewis et al.	346/75
3,409,904	11/1968	Maiershofer	346/101
3,484,794	12/1969	Winston	346/75
3,488,664	1/1970	Winston	346/75
3,500,436	3/1970	Nordin	346/75
3,512,158	5/1970	Scarbrough	346/76

OTHER PUBLICATION

Gamblin et al: Orthogonalization of electrostatic printing: IBM technical Disclosure Bulletin, Vol. 11, No. 10, March 1969, pp 1292-3

Primary Examiner—Joseph W. Hartary

Attorney—J. L. Landis and R. P. Miller

[57] ABSTRACT

A stream of ink drops is electrostatically moved in a printing course from each of a plurality of supply nozzles toward an ink receiving carrier which is moved vertically in a straight path transversely of said course. A sweep voltage associated with each nozzle is repeatedly generated across a first pair of parallel electrodes which are generally horizontally spaced laterally of said course, and has a magnitude adapted for deflecting the associated stream generally horizontally in repeated lines extending transversely of the path of carrier travel and the course between the nozzle and the carrier. The movement of the carrier is adapted to generate one dimension of a two dimensional character from each stream, the sweep of the trace made by the associated "horizontally" deflected ink stream generating the other dimension.

A print or nonprint mode is produced by selected of a pair of voltages applied across a second pair of parallel electrodes which are disposed about the course of each stream and generally vertically spaced. In the print mode, each stream remains in its printing course by clearing the edge of a mask. In the nonprint mode, each stream is deflected generally vertically from its course onto the mask and prevents printing. Accordingly, character definition is obtained. The edge of the mask is a sawtooth configuration having sloping segments, each of which is associated with one stream.

To produce characters which are "squared" to the carrier, the electrodes of each first pair are nonparallel to the direction of the path of carrier movement. Their angle of tilt from a parallel condition is a function of the speed of the carrier such that a line trace resulting from a single sweep of an associated stream of ink drops will mark the carrier normal to the path of carrier movement; and the edge of the mask is parallel to the line along which each ink stream is "horizontally" deflected when printing.

3 Claims, 4 Drawing Figures

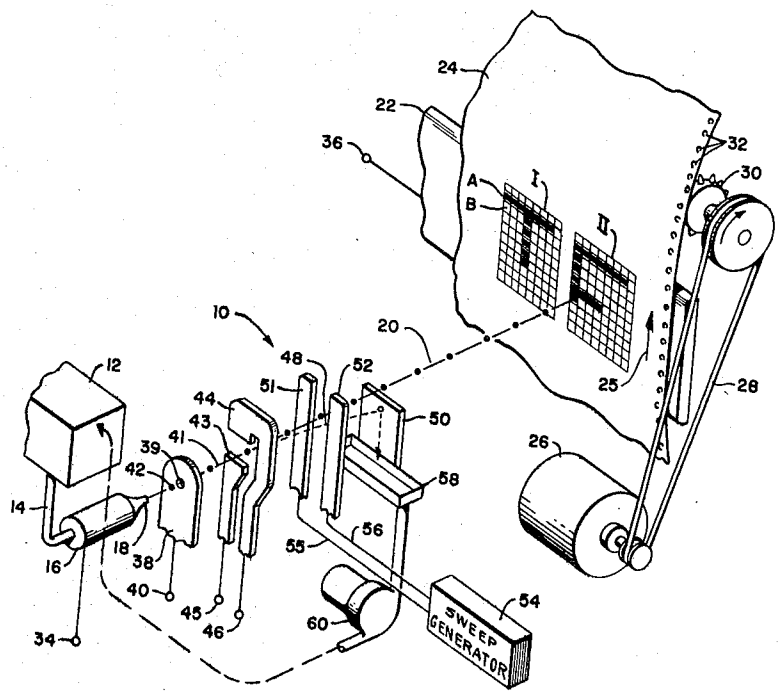

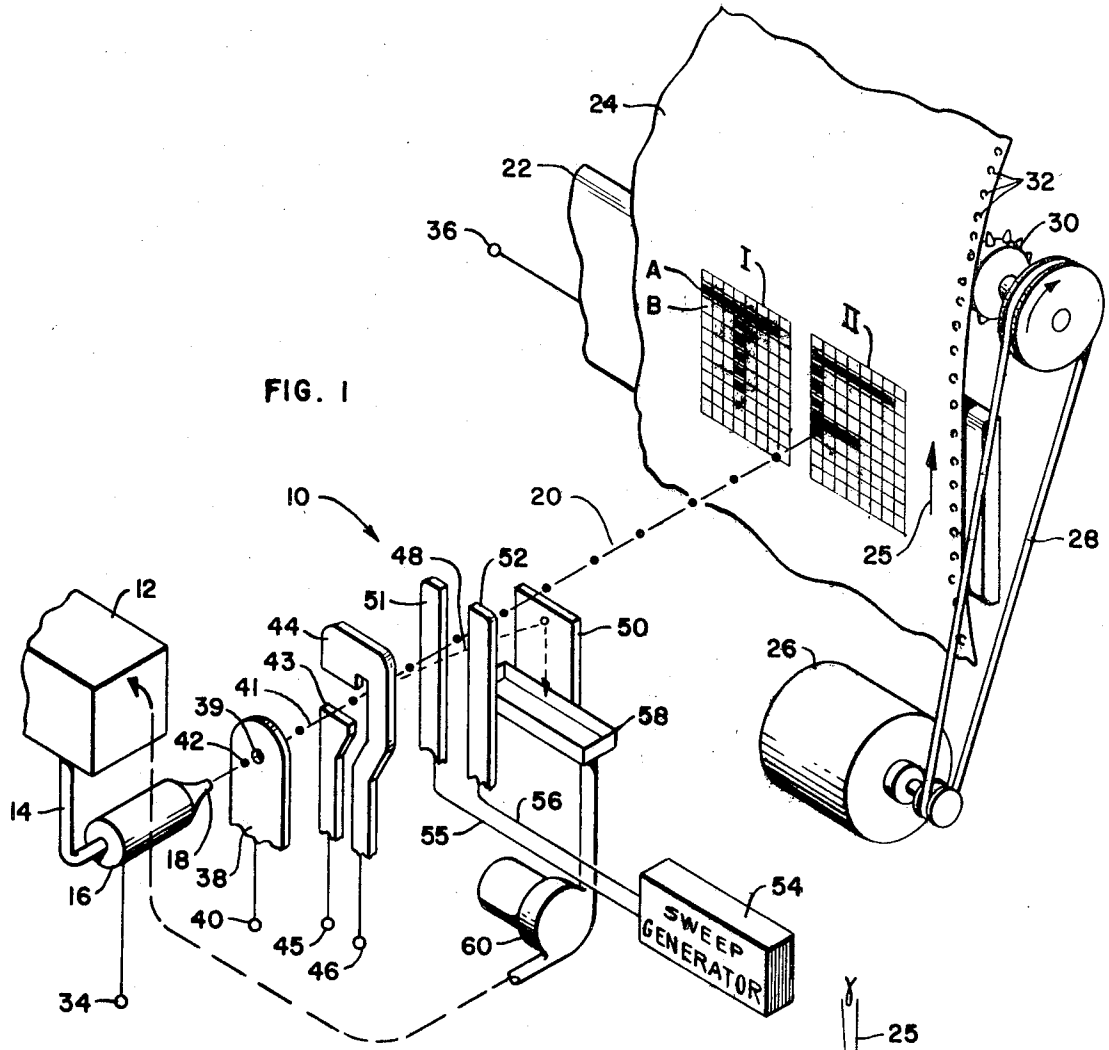

FIG. 1

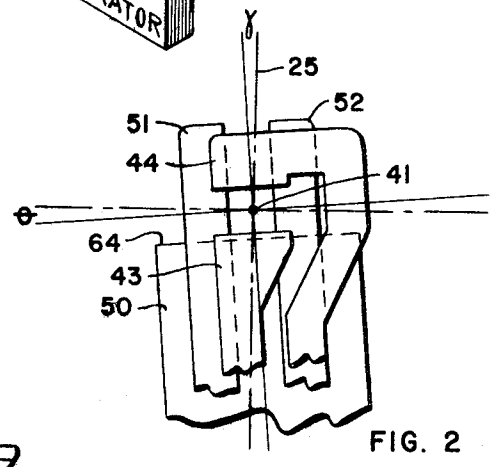

FIG. 2

FIG. 3

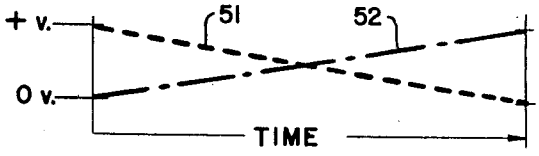

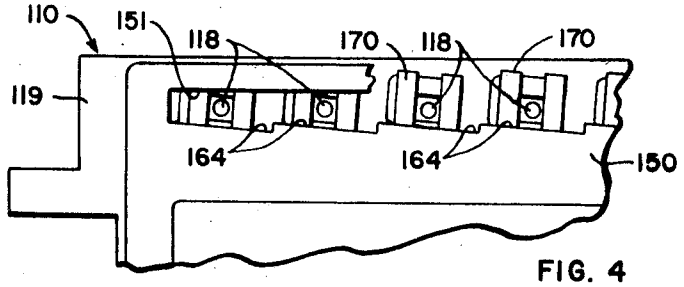

FIG. 4

INVENTOR
JACK L. METZ
BY Sherman P. Appel
ATTORNEY

ELECTROSTATIC PRINTER

FIELD OF THE INVENTION

The present invention relates to printing. Particularly the invention relates to line raster printers. Specifically, the invention relates to an electrostatic raster printer.

BACKGROUND OF THE INVENTION

Raster printing is an art in which one dimension of a two dimensional character is generated by repeatedly applying an ink trace on a carrier or ink receiving medium with ink sweeping means. The other dimension of the character is generated by relative movement of a succession of sweeps and the carrier in a path transversely of each sweep. Character definition is provided by selectively preventing ink deposition during selected sweeps.

Electrostatic printing, of one type, is an art in which a stream of ink droplets is moved across a span from a nozzle to a carrier on which intelligence is printed. Character formation in said art is effected through the agency of voltages which are generated about the ink droplets in the span selectively to deflect the drops.

In one form of the marriage of the aforesaid arts, which heretofor has been consummated, the carrier moves continuously during printing. Accordingly, resulting characters are slanted; and that phenomenon is considered, in some circumstances, to be undesirable. Character slanting may be obviated by printing while the carrier is stationary, with successive line traces in each character raster being advanced or stepped, one at a time, relative the stationary carrier and transversely of each sweep until a character is completed. But, to follow the last procedure requires the addition of electrical components for advancing line traces which are not required when the carrier moves continuously during ink application.

It is an object of the present invention to provide an improved printing process and apparatus.

It is another object of the invention to provide an improved raster printing process and apparatus.

It is a further object of the invention to provide an improved electrostatic printing process and apparatus.

It is an additional object of the invention that the lines of a raster and the direction of carrier movement are orthogonal in a raster printing art in which the character is continuously moving during the printing.

It is yet a further object of the invention to generate characters squared to a continuously moving carrier in a raster printing art, particularly in which the recording material is an electrostatically impelled stream of droplets.

SUMMARY OF THE INVENTION

To effect the foregoing, and other objects of the invention which will become apparent from the ensuing description, one dimension of a two dimensional character is generated by moving a carrier in a path relative ink applying means in a raster printing process. The other character dimension is generated through a repeated sweep force for applying successive linear ink traces transversely of said path. Character definition is produced by preventing selected ink portions from being effective for printing. Means are provided for sloping each linear sweep at an angle other than perpendicular to the path of carrier movement.

From another aspect, said objects are achieved in a printer of the type adapted to generate one dimension of a two dimensional character by moving a carrier on which ink is applied in a straight path. The other dimension of the character is generated by means for directing the ink in repeated sweeps transversely of the straight path in response to changing electrical effects. Means are provided for sloping each ink sweep at an angle other than normal to the straight path. A mask having an edge parallel to the sweeps and beyond which printing is effected is adapted to intercept selected portions of ink deflected from a course toward the carrier to provide character definition.

BRIEF DESCRIPTION OF THE DRAWINGS

In the ensuing detailed description reference is had to the accompanying drawings which:

FIG. 1 is a scheme, in perspective, of apparatus embodying the present invention;

FIG. 2 is an enlarged detailed view looking downstream through an electrode assembly comprising said apparatus;

FIG. 3 is a graphic representation of a voltage sweep across a pair of the electrodes comprising said assembly; and

FIG. 4 is an elevational view of a modified embodiment of the invention looking upstream through its electrode assembly.

DETAILED DESCRIPTION OF THE INVENTION

Referring now more particularly to FIG. 1 of the drawings, shown is a single printing assembly **10** which includes a reservoir **12** as a source for a recording material or ink. The reservoir is fluidally connected through a conduit **14** to an electrically conductive head **16** having ink applying means comprised of a delivery nozzle **18**. In the illustrated embodiment, sufficient head pressure is maintained for producing a meniscus from the downstream end of the nozzle to produce an intrusion of ink in a gap **20** generated by spacing an electrically conductive platen **22** downstream from and in printing alignment with the nozzle.

A carrier or ink receiving medium **24** is arranged to be moved in a straight path **25** at constant and uniform velocity over the upstream face of platen **22** by motive means shown herein as a motor **26**. To that end motor output is coupled through a drive train, which may include a pulley **28**, to a sprocket wheel **30**, the teeth of which are proportioned for feeding engagement in marginal apertures **32** of carrier **24**. Path **25** is considered vertical, as shown in the drawings relative which all terms of orientation in the specification is made.

Charging means which may be of conventional construction and of which terminals **34** and **36** are shown respectively connected to head **16** and platen **22** provide a potential difference in gap **20**, charge platen **22** and produce an electrostatic charge on ink as it passes through head **16**. A valving electrode **38** is connected to a charge generator, only terminal **40** of which is shown, and is disposed downstream of nozzle **18**. It is adapted to generate an electrostatic field of sufficient magnitude to draw ink into a stream of drops **42** and initiate ink movement in a course **41** toward carrier **24**. The valving electrode has an aperture **39** which is coaxially aligned with the bore of nozzle **18**, and through which the stream will continuously flow under sufficient impelling force to reach the carrier.

Parallel electrodes **43** and **44** of a first or "vertical" pair thereof are spaced downstream of valving electrode **38** and are generally vertically spaced apart about course **41** permitting passage therebetween of the stream of drops. Charging means of which only terminals **45** and **46** are shown, are adapted for imposing selected of two voltage conditions across said last electrodes. In a first of the conditions, assembly **10** is in an "on" or print mode and drops **42** are not affected. In the second condition, assembly **10** is in a nonprint or "off" mode and the drops are deflected "vertically" from course **41** to a course **48**.

A mask **50** is disposed in intercepting or catching association with path **48** downstream of electrodes **43** and **44** between platen **22** and parallel electrodes **51** and **52** of a second or "horizontal" pair thereof. The last mentioned electrodes are parallel to each other and are generally horizontally spaced apart, being disposed about path **41** downstream of electrodes **43** and **44**.

A sweep generator **54** is connected to electrodes **51** and **52** through a pair of leads **55** and **56** for repeatedly deflecting drops **42** in a generally horizontal direction transversely of path **25** and course **41**. By means which may be known, the sweep generator is adapted to charge left electrode **51** decreasingly from a high to a base value while simultaneously increasing the charge on the right electrode **52** from such base

value to a high value (FIG. 3), and after each voltage sweep to restore itself for a repeat sweep. In consequence thereof, drops 42 which are passing between the horizontal electrodes and are in course 41 (not having been deflected into course 48) will be moved from the left to the right in a manner such that a straight line of ink dots will be traced or printed on carrier 24 transversely of the path 25 for each voltage sweep.

Accordingly, one dimension of any visual two dimensional design, such as an alphanumeric character, can be generated on carrier 24 by reason of the "horizontal" sweep of the ink stream. The other dimension of such design can be generated in consequence of movement of the carrier. The result of the combined effect is a line raster. Character definition is added by applying "vertically" deflecting voltages such that selected drops 42 from groups thereof which would be associated with selected line traces, if printed, will be directed against mask 50. Control of the "vertical" electrodes through terminals 45 and 46 can be in accordance with programming which may be conventional.

A trough 58 is arranged in draining association with mask 50 and is adapted for collecting fluid which is directed is stream 48. Suitable means, such as a pump 60, which is fluidally connected to trough 58 is adapted to return ink caught on mask 50 to reservoir 12. The foregoing construction precludes the requirement for shutting off ink flow from nozzle 18 during the printing operation and thereby minimizes the likelihood of nozzle cloggage which occasionally occurs in systems which do not maintain continuous flow from the nozzle during printing.

If, as in heretofor known devices, the direction of spacing of the "horizontal" electrodes is normal to path 25, each line of a raster traced on carrier 24 will slope in a manner such that the characters which are formed will not be "squared" to the carrier; and resulting printing will be slanted. In accordance with the present invention, such result can be obviated. That is to say, the lines of each raster and path 25 can be orthogonal. To that end, the path of deflection of stream 41 during each voltage sweep is required to be at an angle to path 25 which is other than normal; the angle from normal through which the stream is horizontally deflected being a function of carrier velocity.

Particularly, means for producing the result comprises electrodes 51 and 52 disposed in a general lateral condition to the path 41; however, rotated (FIG. 2) slightly about the axis of the bore of nozzle 18 such that the direction of spacing of said "horizontal" electrodes is at an angle other than normal to path 25. Said "horizontal" electrodes when thusly disposed are aptly and variously characterized as means for sloping the path along which ink is deposited on the carrier at an angle other than normal to the direction of the path of carrier movement, and means for sloping each sweep of the ink stream or each ink trace on carrier 24 at an angle other than perpendicular to the direction of path 25.

Mask 50 has a straight edge 64 (FIG. 2) which is disposed adjacent path 41 such that when a print mode is effected in assembly 10, drops 42 will clear or pass above edge 64 for impinging carrier 24. However, when a nonprint mode is effected, the drops will be directed below said edge. According to another aspect of the invention, edge 64 extends parallel to the slope of the path taken by the drops during "horizontal" deflection, means for deflecting selected portions of the drops against said mask to prevent impingement on said carrier comprising electrodes 43 and 44.

According to yet another aspect of the invention, the direction of spacing of electrodes 43 and 44 and the direction of spacing between electrodes 51 and 52 are orthogonal. Accordingly, the direction of the spacing of electrodes 43 and 44 forms an angle with path 25 which is equal to the angle formed by the direction of the spacing of electrodes 51 and 52 with the perpendicular to said path.

A modified embodiment of the invention has an assembly 110 (FIG. 4) for simultaneously printing a plurality of designs or characters and comprises a horizontal array 118 of nozzles, each of which is similar to nozzle 18. The nozzles in the array are mounted in a framework 119 which also supports a plurality of electrode assemblies 170 each of which is associated with a nozzle and disposed relative thereto in the manner illustrated for the electrodes in assembly 10.

A unitary mask 150 is associated with and disposed downstream of all of the nozzles in the array. The mask has a window opening 151 with a saw-toothed edge comprised of a plurality of segments 164 each of which corresponds to a mask edge 64. That is to say, each segment 164 extends parallel to the direction of "horizontal" deflection or sweep of an ink stream of an associated nozzle when such stream is in a printing mode. By suitably selecting the number of nozzles in array 118 all of the horizontal segments in a line of intelligence can be printed simultaneously.

In the illustrated embodiment, each nozzle is adapted to provide a stream for printing two alphanumeric characters at one time. That is to say, assuming an "on" print mode the stream issuing from one nozzle will be swept from left to right with respect to FIG. 1, first to impinge the carrier along segment I of row A continuing the sweep along segment II of row A following a programmed interruption to enable proper character spacing. Thereafter during an ensuing sweep and following rapid retrace during which a nonprint mode is effected, a line would be traced on segment I of row B and thereafter, on segment II of row B. Successive rows could be traced in a like manner until a pair of characters will have been completed, preventing ink from reaching selected areas of the carrier by control of voltage across electrodes 43 and 44.

An operating embodiment of the illustrated apparatus is adapted to print characters each of which has a matrix of 0.080 inch by 0.100 inch with character spacing 0.020 inch. Although two matrices are shown traced in FIG. 1 for illustration, in practice they are not traced on carrier 24. Only desired designs are traced, upper portions of two thereof being shown in FIG. 1. Each matrix has 80 dot positions for each character arranged in 10 rows and eight columns, each dot position comprising a square adapted for reception of a plurality of drops 42, and each character matrix being spaced two columns from an adjacent thereof. Accordingly, each adjoining horizontal pair of characters made from one nozzle will require 10 horizontal sweeps. These can be made in said operative embodiment in 50.14 milliseconds. Restated, each sweep requires 4.36 milliseconds. Retrace time requires 0.654 milliseconds.

In said embodiment a hydrostatic head of 0.718 inch of ink is maintained as an operating condition. The inside diameter of the bore of nozzle 18 is 0.0065 inch, its outside diameter being 0.010 inch. The diameter of aperture 39 is 0.030 inch and the accelerating electrode is spaced 0.0435 inch from the downstream end of said nozzle.

"Vertical" electrodes 43 and 44 are spaced 0.045 inch (center to center) from the valving electrode 38; and "-horizontal" electrodes 51 and 52 are spaced a like distance (center to center) from the "vertical" electrodes. Mask 50 is spaced 0.103 inch downstream from the "horizontal" electrodes (center to center) and said mask is spaced 0.240 inch from platen 22. The thickness of each of the electrodes and of said mask is 0.010 inch, the valving electrode, the pair of "vertical" electrodes and the pair of "horizontal" electrodes each being disposed in a plane parallel to the planes of the others and to the plane of mask 50.

Moreover, each electrode of each "vertical" and "horizontal" pair thereof is spaced a distance from course 41 equal to the distance that the other electrode of such pair is spaced from said course. Furthermore, the spacing between the "vertical" electrodes is 0.020 inch and the spacing between the "-horizontal" electrodes is 0.025 inch.

An ink which has been used effectively in the operative embodiment has the parameters of viscosity and resistivity which are set forth in the copending application of Robert J. Dunlavey and Charles R. Winston, Ser. No. 853,825, filed Aug.

28, 1969, and assigned to the assignee of the present application. An adequate jet printing stream which is controllable in the manner herein described is drawn from nozzle **18** by an electrostatic field generated by imposing −3,500 volts on nozzle **18** and −1,000 volts on valving electrode **38**. By applying +10,000 volts to platen **22**, the ink stream, when in a print mode, will have sufficient impetus to impinge on carrier **24** for printing.

During operation of the apparatus the uppermost electrode **44** of the "vertical" pair thereof is maintained at reference or ground potential when either a print or a nonprint mode prevails. To effect a print mode −450 volts is applied to the lower electrode **43** of said pair. This is sufficient under the conditions in the apparatus to deflect the ink stream along path **48** into mask **50**, when the latter is maintained at +4,000 volts. During each voltage sweep, voltage on left electrode **51** is reduced from +1,600 volts to 0 while the voltage on the right electrode **52** increases from 0 to +1,600 volts and will produce a single line of the raster.

The spacing between the upper edge **64** of the mask and path **41** is merely 0.006 inch; the angles θ and γ (FIG. **2**) are 2°35½ minutes.

Under the conditions identified, printing can be effected which is "squared" to carrier **24** while it is continuously driven at a velocity of 1.944 inch per second.

As many modifications in the described construction and process could be conceived, and as many changes could be made therein without departing from the spirit and scope of the claims, it is intended that all matter contained in the accompanying specification shall be considered as illustrative only and not in a limiting sense.

I claim:

1. In an electrostatic printer for simultaneously printing a plurality of two dimensional characters and being of the type adapted to generate one dimension of each two dimensional character by movement in a straight path of a carrier toward which ink drops in a stream are directed over a course from across a span relative ink applying means and the other dimension of each character is generated by application of changing voltages across a pair of parallel first electrodes disposed in said span at an angle other than parallel to said course and spaced apart transversely thereof for deflecting said stream in a succession of sweeps transversely of said straight path and at an angle other than perpendicular to the direction of said straight path, the improvement characterized by:

an array of horizontally aligned nozzles, each of said nozzles associated with a pair of parallel first electrodes for simultaneously providing a plurality of streams of ink;

a mask construction disposed downstream of said nozzles and defined by a sawtooth edge configuration with a plurality of segments extending longitudinally of nozzle alignment, said configuration comprised of edges respectively associated with said nozzles, each edge extending parallel to the sweeps of the stream of ink from an associated nozzle, and

a pair of parallel second electrodes associated with each nozzle for providing character definition by stream deflection, each pair of second parallel electrodes spaced transversely of the spacing of associated first electrodes and extending transversely of though at an angle other than perpendicular to an associated straight path, each pair of said second electrodes having a first condition in which an associated stream impinges said carrier during any portion of a sweep and a second condition in which such stream is prevented by said mask construction from reaching said carrier during any portion of its sweep.

2. A combination according to claim **1** wherein said mask construction has a window opening limited by said configuration.

3. A combination according to claim **2** wherein said sawtooth configuration has a plurality of slopes each thereof parallel to the others and to the path of the sweeps of an associated nozzle.

* * * * *