Oct. 29, 1929. LE ROI E. HUTCHINGS 1,733,304

CARD INDEX

Filed March 8, 1926 2 Sheets-Sheet 1

Fig. 1.

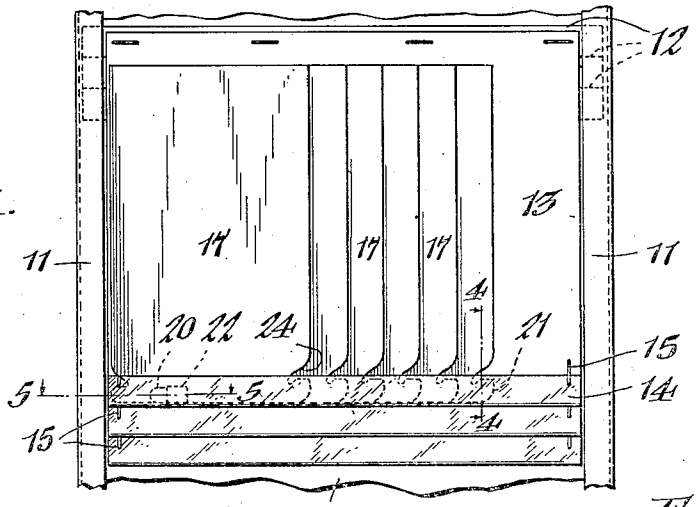

Fig. 2.

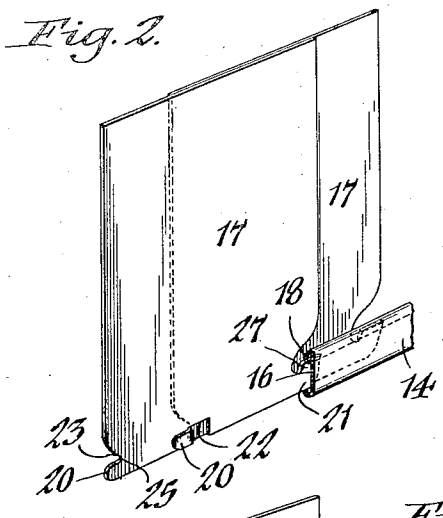

Fig. 3.

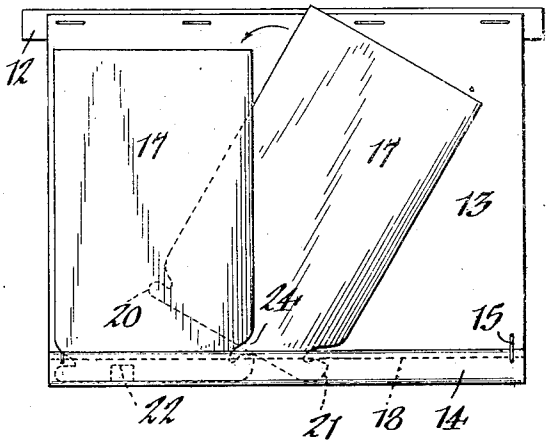

Fig. 4.

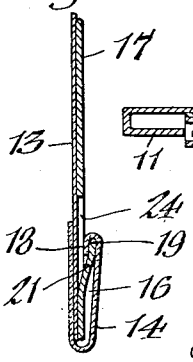

Fig. 5.

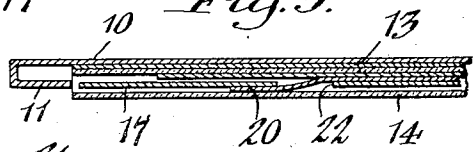

Fig. 6.

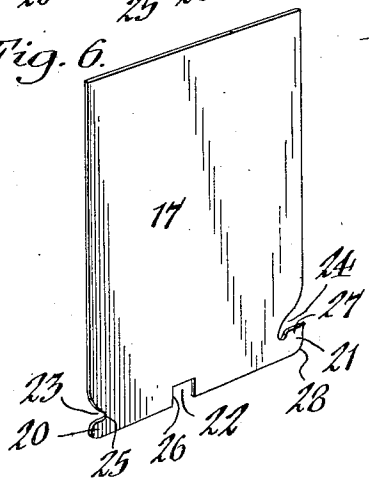

Inventor,
Le Roi E. Hutchings,
by Geyer & Geyer
Attorneys.

Oct. 29, 1929. LE ROI E. HUTCHINGS 1,733,304

CARD INDEX

Filed March 8, 1926 2 Sheets-Sheet 2

Fig. 7.

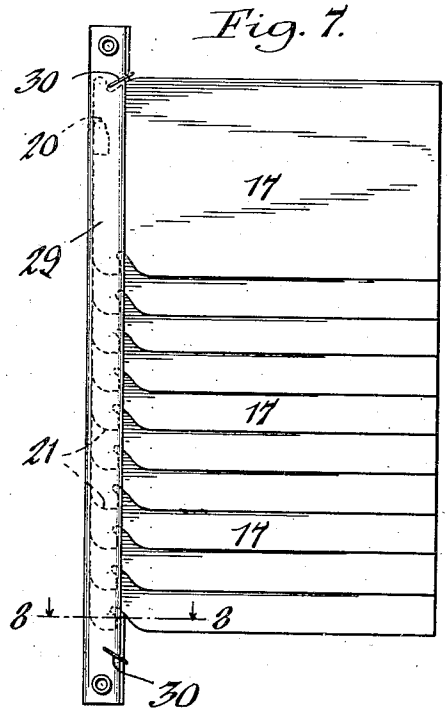

Fig. 8.

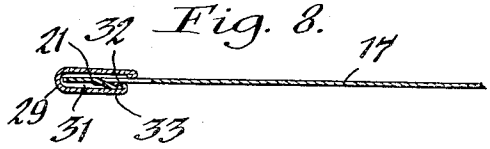

Fig. 10.

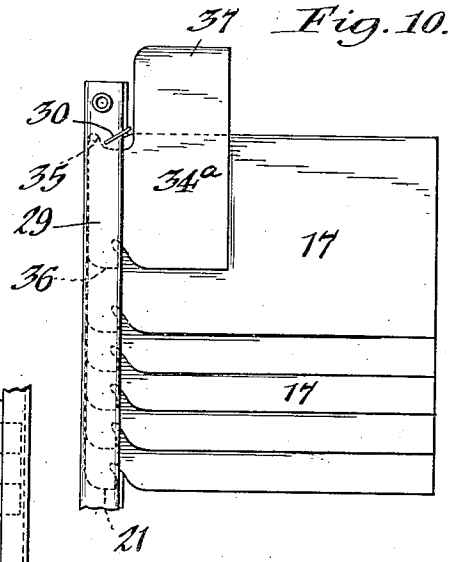

Fig. 9.

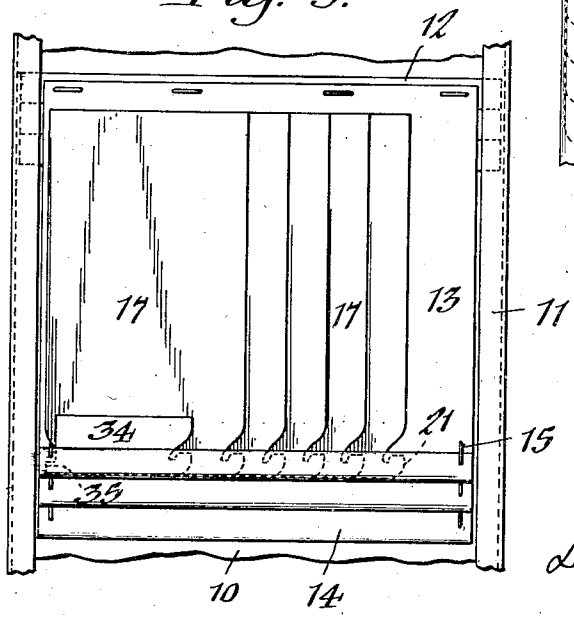

Inventor,
Le Roi E. Hutchings,
by Geyer & Geyer
Attorneys.

Patented Oct. 29, 1929 1,733,304

UNITED STATES PATENT OFFICE

LE ROI E. HUTCHINGS, OF TONAWANDA, NEW YORK, ASSIGNOR, BY MESNE ASSIGNMENTS, TO REMINGTON RAND INC., OF NEW YORK, N. Y., A CORPORATION OF DELAWARE

CARD INDEX

Application filed March 8, 1926. Serial No. 93,106.

This invention relates generally to indexes but more particularly to the visible index type consisting of overlapping cards.

Its principal object is the provision of an index of this character in which the cards or inserts are so constructed that they are removably interlocked one with another in overlapping relation at predetermined distances apart.

Another object of the invention is to provide an overlapping card index wherein the cards are detachably anchored at one edge against both lateral and longitudinal displacement relative to one another and to the supporting member or guide, while the opposite edges are free to enable the cards to have a hinging or book-leaf action to permit the use of both sides of the cards for entries or memoranda.

A further object is to provide a simple and inexpensive overlapping card index which affords a maximum capacity within a minimum amount of space and which is so organized and arranged that the cards can be conveniently inserted and removed.

A still further object of the invention is to produce an overlapping card index adaptable for use in index panels, loose leaf binders, etc., which provides for visibility along two adjoining marginal portions of the cards.

In the accompanying drawings: Figure 1 is a fragmentary face view of an index panel and its card-supports with the invention embodied therein. Figure 2 is a fragmentary perspective view showing the manner of interlocking the cards with each other and with the supporting rail or pocket. Figure 3 is a perspective view showing the manner of inserting a card in position. Figure 4 is an enlarged transverse vertical section on line 4—4, Fig. 1. Figure 5 is an enlarged horizontal section on line 5—5, Fig. 1. Figure 6 is a detached perspective view of one of the index cards. Figure 7 is a front view showing the index cards applied to a supporting member or rail for use in a loose leaf binder or the like. Figure 8 is a horizontal section thereof on line 8—8, Fig. 7. Figures 9 and 10 are face views showing the use of a master or title card in connection with the invention.

Similar characters of reference indicate corresponding parts throughout the several views.

In the embodiment of the invention illustrated in Figs. 1–6, inclusive, the same is shown in connection with a frame or index-panel 10 having inwardly-turned side-flanges 11 forming parallel channels or guides for the transverse strips 12 to which the card-supporting members or sheets 13 are hinged or otherwise connected. Each card-supporting member has a card-engaging sheath or holder preferably in the form of a doubled strip 14 of celluloid or other transparent material embracing its lower or free edge and secured thereto by wire staples 15. An upwardly-opening pocket 16 is thus formed between the front wall of said transparent strip and the opposing face of the supporting member for receiving the index-cards 17 in a substantially upright position. Along the upper edge of its front wall, the strip 14 has an inwardly and downwardly bent lip or flange 18 forming a continuous channel or groove 19 for a purpose hereinafter described.

Each of the card-supporting members 13 is adapted to contain a plurality of the index-cards 17 disposed in overlapping relation crosswise thereof with their lower edges or alining marginal portions at one side thereof, engaged or seated in the corresponding pocket 16. These cards are so constructed that they are adapted to interlock one with another at predetermined distances apart to hold them against relative lateral displacement and to interlock with the channel 19 of the pocket-strip 14 to prevent their vertical displacement or dislodgement from the pocket. For this purpose, the lower marginal portion of each card is provided at its opposite side edges or corners with oppositely-facing lugs or tongues 20, 21 and in its bottom edge with a notch or recess 22. These tongues are preferably contained within the dimensional area of the card-body and to this end are formed by cut-out spaces 23, 24 provided in its opposite sides adjacent the lower edge thereof, as shown in Fig. 6. The tongue 20 extends

laterally and outwardly from the card-body or parallel with its lower edge and is adapted to interlock with the companion notch 22 of the adjoining overlying card, the shoulder 25 formed at the intersection of the adjoining edges of the tongue and the corresponding space 23 abutting against the opposing edge or shoulder 26 of said notch. The other tongue 21 extends laterally and upwardly from the card-body and its upper portion 27 is adapted to engage the channel 19 of the pocket 16 to prevent the upward displacement or accidental escape of the card from said pocket when it is once inserted in place.

The tongue 20 of the topmost card of a series carried by a given supporting member 13 is adapted to enter the space formed between the bottom of the pocket 16 and the adjacent wire staple 15 in the manner shown in Fig. 1, whereby displacement of this card beyond the edge of the supporting member is prevented. By providing the cards with the interlocking tongues and notches 20, 22, they are reliably held against relative lateral displacement, the overlying card of a pair being locked against shifting relatively to the other in one direction and the underlying card being locked against shifting in the opposite direction. The cooperating shoulders 25, 26 of the tongues 20 and notches 22, respectively, determine the extent of uniform overlapping of the various cards, so that the upright margins thereof as well as the adjoining lower portions of the same contained within the pockets are clearly visible.

The manner of inserting the cards in their pocket is shown in Fig. 3. Each card is held in a more or less diagonal position with the lug 21 facing downwardly to permit its introduction in the pocket. The card is then turned or shifted around to an upright position, bringing the remaining lower marginal portion of the card into the pocket and the upper portion 27 of said lug 21 into engagement with the pocket-channel 19. This act of inserting the card into place in its pocket is facilitated by rounding the lower corner of the lug 21, as shown at 28. Succeeding cards are placed in the pocket in the same manner and then shifted laterally or to the left of the supporting member 13 to bring their corresponding tongues 20 into locking engagement with the companion notches 22 of adjoining cards. If desired, the free ends of the card-tongues 20, 21 may be forwardly deflected or bent up slightly to facilitate their ready and convenient introduction into the notches 22 and channels 19, respectively. The removal of any card from the index is effected by shifting the cards beneath it to the right a sufficient distance to enable the tongue 20 of such card to clear the shoulder 26 of its companion notch, after which it is swung to a more or less diagonal position to disengage its tongue 21 from the pocket channel and then withdrawn.

By mounting and interlocking the cards in overlapping relation in this manner, they are permitted a hinge or leaf-like action from the anchoring pocket 16, which permits both sides of the cards to be used for entries and memoranda and also allows index data to be applied to the exposed side marginal portion of the cards.

As shown in Figs. 7 and 8, the invention is also adaptable for use in connection with loose leaf binders and the like. In this case, a supporting member consisting of an anchor strip or rail 29 of metal or transparent material is provided which is adapted for attachment in an upright position in the binder, with the overlapping cards 17 projecting outwardly or laterally therefrom. The anchor strip is doubled lengthwise upon itself and secured at its ends by staples 30 to form a pocket 31 for receiving the interlocking inner end portions of the cards, one of the walls of the pocket terminating in an inwardly-bent flange 32 forming a channel 33 with which the card-tongue 21 is adapted to interlock, as in the previously described construction.

If desired, master or title cards 34 and 34ª may be used in connection with this improved index, as shown in Figs. 9 and 10 respectively. This title card is arranged to interlock with the pockets of the anchor strips 14 or 29 and has tongues 35, 36 similar to those of the index cards, the tongue 35 occupying the space provided at the end of the rail between the bottom of its pocket and the corresponding staple 15 or 30. In Fig. 9, the title card 34 is shown projecting a suitable distance above the anchor-strip for receiving the index matter, while in Fig. 10, the card 34ª is shown having a tab or portion 37 which projects beyond the top edge of the anchor-strip and binder where its index matter is exposed to view.

This improved index, is not only simple and inexpensive, but it is very compact and has a relatively large capacity. By interlocking the cards in the manner shown and described, they are reliably held against displacement and are automatically gaged in uniform overlapping relation; and they can be readily inserted and removed when desired without disturbing the indexing arrangement.

I claim as my invention:

1. An index of the character described, comprising a plurality of supporting members each having a card-retaining portion, and a series of cards having alining marginal portions at one edge of the cards engaging each supporting member, said cards having parts formed in their alined marginal portions arranged to slidably interlock with one another and with the retaining portions of

said supporting members to hold the cards in overlapping relation.

2. An index of the character described, comprising a supporting member including a transparent pocket having a retaining lip, and a series of cards having the alining marginal portions at one edge of the cards engaging said pocket, said cards having parts formed in their alined marginal portions arranged to interlock with each other and with the retaining lip of said pocket to hold the cards in overlapping relation and prevent their displacement relative to one another and their escapement from the pocket, respectively.

3. An index of the character described, comprising a supporting card including a transparent sheath along one edge thereof, and a series of cards having the alining marginal portions at one edge of the cards engaging said supporting sheath, said cards having cooperating parts for gaging the same in a predetermined overlapped relation and each card having a part of its alined marginal portion arranged to interlock with said sheath to prevent the displacement of the card therefrom.

4. An index of the character described, comprising a card-supporting transparent pocket having a retaining lip along the open edge thereof, and a series of cards having the alining marginal portions at one edge of the cards engaging said pocket, said cards having parts of such marginal portions arranged to slidably interlock with one another for gaging them in overlapping relation and for preventing their relative displacement lengthwise of the pocket, said cards also having means arranged to interlock with said lip to prevent displacement of the cards transversely of said pocket.

5. An index of the character described, comprising a card-supporting pocket having a retaining element along its open end, and a series of overlapping cards having the alining marginal portions at one edge of the cards engaging said pocket, each of said cards being provided in such marginal portion with a tongue facing in a direction lengthwise of the pocket, a tongue facing in a direction transversely of the pocket and a recess intermediate said tongues, the first-named tongue of one card interlocking with the recess of an adjoining card and the second-named tongue interlocking with the retaining element of said pocket.

6. An index of the character described, comprising a card-supporting pocket having an inwardly-bent flange along its open end forming a channel, and a series of overlapping cards having the alining marginal portions at one edge of the cards engaging said pocket, each of said cards being provided at opposite ends of its portion contained in the pocket with oppositely-directed tongues and intermediate said tongues with a recess, one of the tongues of a card interlocking with the recess of an adjoining card to gage its predetermined overlapping position relative thereto and to prevent relative displacement of such adjoining cards lengthwise of the pocket, the other tongue having a portion facing in a direction transversely of said pocket and engaging the pocket-channel to prevent the escape of the card from the pocket.

7. An index of the character described, comprising a card-supporting member including a transparent pocket and a retaining lip along the open edge of the pocket, and a series of cards removably seated in said pocket, each of said cards having a tongue formed by a removed section of the body of the card arranged to interlock with said retaining lip to prevent displacement of the card from the pocket.

8. An index card having tongues located at two adjacent corners thereof, one of the tongues extending in a direction substantially parallel with that edge of the card connecting said tongues and the other tongue having a part extending in a direction toward the opposite edge of the card.

9. An index card having tongues located at two adjacent corners thereof and a recess in that edge of the card between said corners, said tongues being within the dimensional area of the card and formed by cutting out portions of the card above the tongues, one tongue extending in a direction parallel with that edge of the card connecting said tongues, and the other tongue extending in a direction toward the opposite edge of the card.

LE ROI E. HUTCHINGS.