Oct. 25, 1949. G. N. PHELPS 2,485,769

METHOD AND APPARATUS FOR INSERTING CONTACTS IN GLASS TUBES

Filed Dec. 29, 1944

Fig. 1.

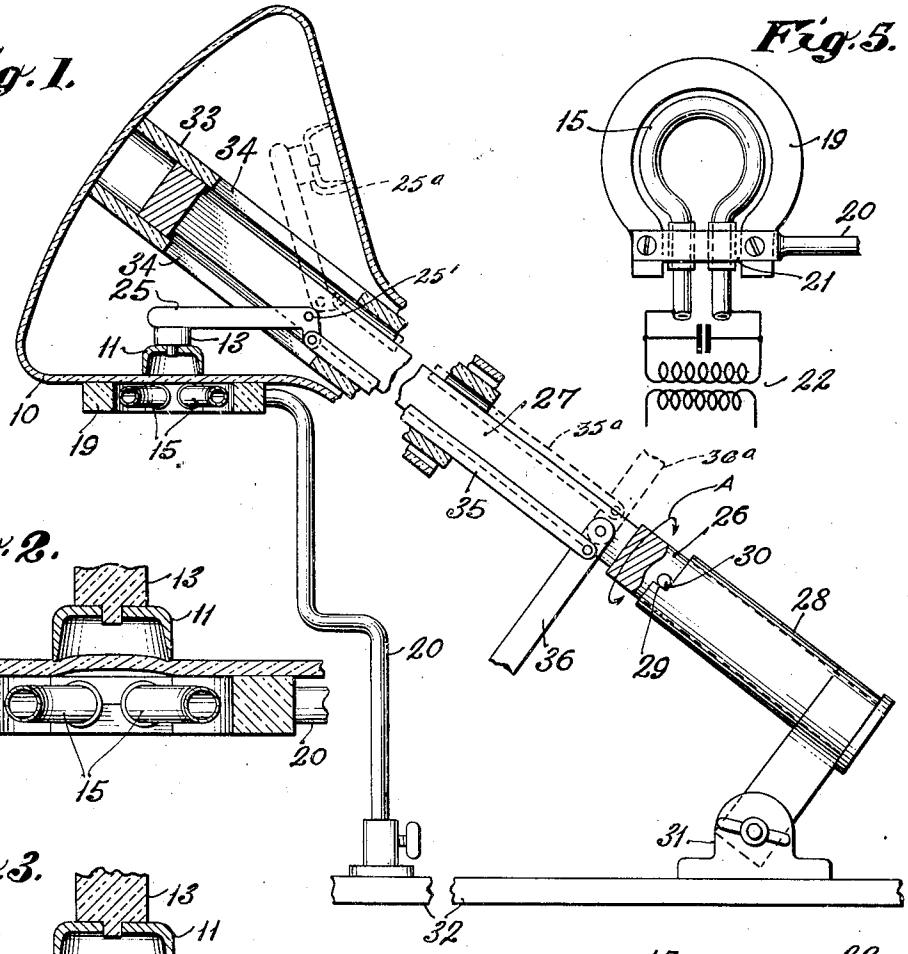

Fig. 5.

Fig. 2.

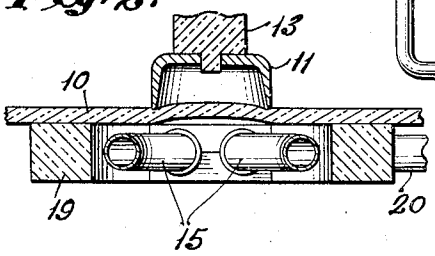

Fig. 3.

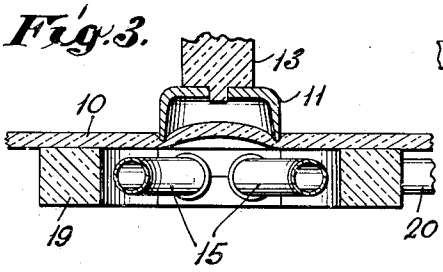

Fig. 6.

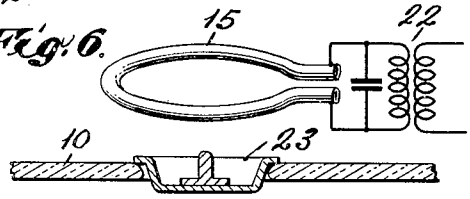

Fig. 4.

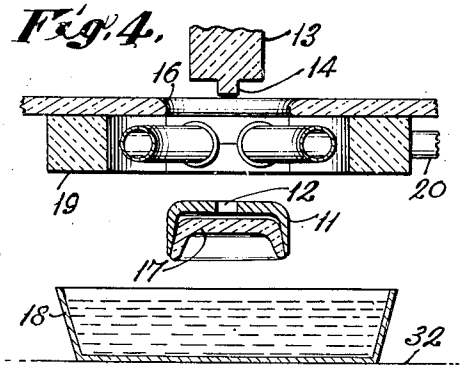

Fig. 7.

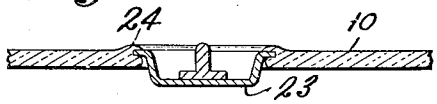

INVENTOR
George N. Phelps
by Charles McClair
ATTORNEY

Patented Oct. 25, 1949 2,485,769

UNITED STATES PATENT OFFICE

2,485,769

METHOD AND APPARATUS FOR INSERTING CONTACTS IN GLASS TUBES

George N. Phelps, Lancaster, Pa., assignor to Radio Corporation of America, a corporation of Delaware

Application December 29, 1944, Serial No. 570,431

15 Claims. (Cl. 49—28)

1

My invention relates to perforating sheet glass and more particularly to making a hole in the wall of a glass bulb and sealing a metal disc or button contact in the hole.

In some types of cathode ray tubes as, for example, the tube disclosed in U. S. Patent 2,323,-148, McLaughlin, June 2, 1943, a disc or button contact is sealed into the side wall of the bulb. A conventional method for sealing this disc or button contact into the bulb wall is to soften a spot on the bulb wall with a pointed flame, blowing out a hole at the softened spot about the size of the contact by introducing compressed air into the bulb, inserting the metal disc or contact in the hole, and sealing the edge of the contact to the glass by gas fires. This conventional method requires a skilled operator, is comparatively slow, and the product varies in appearance and quality.

The principal object of my invention is to provide an improved method of making in a sheet of glass, such as the wall of a glass bulb, a clean-cut hole of predetermined size which is more suitable for receiving a disc or button contact for sealing into the glass wall than the hole made in the conventional way. Another object is to provide a faster and easier method of sealing metal discs or button contacts into a glass wall and to make such seals more uniform in appearance and quality than those usually obtained by conventional methods. A further object is to provide an apparatus or fixture to facilitate the practice of my improved method.

In accordance with my invention a metal punch preferably having a cupped or concave working end is held with its working end in contact with a sheet of glass as, for example, the inside wall of a glass bulb, and is heated by a high frequency coil until the glass in contact with the edge of the punch becomes soft and plastic. When pressed against the glass, the heated punch displaces the softened glass immediately underneath the edge of the punch, making in the glass a crease or groove which deepens until the punch goes through the sheet of glass and leaves in it a clean-cut hole. Good results have been obtained with a single turn heating coil somewhat larger in diameter than the disc or button contact held close to the glass opposite to and coaxial with the punch, the field of the coil extending through the sheet of glass to the punch, which passes through the glass and also through the heating coil when the hole is punched.

The metal disc or button contact, slightly larger than the hole made by the punch, is sealed into the wall of the bulb in accordance with my

2

invention by inserting the contact in the hole with its edge resting on and slightly overlapping the edge of the hole, and subjecting it to the high frequency field of an induction heating coil so placed that the edge of the disc or button contact is heated by induction to glass-to-metal sealing temperature. The single turn induction heating coil heats the edge of the disc or contact button and the adjoining glass more than the center, so that glass-to-metal sealing temperature is reached only in an annular zone along the edge of the contact button.

Further, in accordance with my invention, and to facilitate the practice of my invention, I provide a fixture or jig by means of which the punch may be held firmly against the inside wall of the bulb at a selected point while it is subjected to the field of the high frequency heating coil and the operator may at will exert a controlled pressure upon the hot punch to force it through the wall of the bulb.

My invention will be better understood in connection with the accompanying drawing in which Fig. 1 is a view showing partly in section a cathode ray bulb and a fixture or jig to facilitate the punching of a hole in the wall of the bulb in accordance with my invention; Figs. 2, 3, and 4 are fragmentary views in cross-section showing successive steps of punching the hole; Fig. 5 is a plan view of the single turn induction coil for heating the punch; Fig. 6 is a sectional view of a portion of the bulb wall showing the metal disc or contact and the single turn induction heating coil in position for sealing the contact into the bulb wall; and Fig. 7 is a sectional view of the same portion of the bulb wall with the contact sealed to the glass.

In accordance with my invention a hole is punched in a sheet of glass 10, for example, the glass wall of the bulb of a cathode ray tube, by a concave metal punch 11, the edge of which is pressed against the sheet of glass at the point where the hole is to be punched. The punch may be made of any metal which is rigid at the temperature at which glass softens, and may be of various forms and sizes. Preferably the working end which contacts the glass sheet is sufficiently concave to provide an annular cutting edge or rim of the size and shape of the hole to be punched. The punch 11 may be made of nickel about 16 mils thick and shaped as a seamless cup about one-half inch in diameter and about one-fourth inch deep with a hole 12 about one-eighth inch in diameter in the center of the bottom of the cup. Preferably the punch is slightly tapered so that

it is of maximum diameter at the working end which makes contact with the sheet of glass during the punching operation.

The concave or cup-shaped punch is held with its edge in contact with the inner side of the wall 10 of the bulb, and is at will pressed against the glass by a punch holder 13, which may conveniently be a cylinder of refractory insulation with a coaxial smaller pin 14 projecting from its end and of such a size that it will fit loosely into the hole 12 in the bottom of the cup-shaped punch 11. The end of the cylinder 13 around the pin 14 forms a shoulder on which the bottom of the cup-shaped punch rests. A high frequency induction coil 15 which may conveniently, though not necessarily, be on the opposite side of the sheet of glass from the punch is so positioned that the working end of the punch is in the magnetic field of the coil. The particular heating coil shown in the drawing, merely as an example, is a single turn high frequency coil about 1 inch in diameter and preferably of metal tubing to permit water-cooling. The coil is positioned opposite the punch and coaxial with it and on the outside of the bulb during the punching operation. The field of the single turn coil 15 when it is supplied with high frequency current, for example a current of about 500 to 600 milliamperes at a frequency of about 600 kilocycles, will quickly heat the edge of the punch to a temperature at which the glass adjoining the edge of the punch and in contact with it is softened to such an extent that a comparatively slight pressure on the punch will force it into and through the annular zone of softened glass at the edge of the punch, thereby forming a clean-cut hole 16, best shown in Fig. 4, of substantially the same size as the punch. It is found in practice that the glass which is punched out to form the hole tends to stick to the punch and to accumulate in the cavity of the punch as a more or less adherent mass of glass 17. A convenient way to crack off and dislodge this mass of glass 17 so that the punch can be used again is to drop the hot punch into water in a water pan 18, as indicated in Fig. 4.

In order to avoid localized strains in the glass wall during the punching operation, contact of the heated glass with the water-cooled high frequency coil 15 should be avoided. The bulb may with safety rest on an annular support 19 of refractory insulation coaxial with the coil 15 and preferably carried on a vertically adjustable pedestal 20. The upper side of the annular support 19 on which the bulb rests projects above the plane of the coil 15, and when the wall of the bulb rests on the support 19, with the punch 11 in place on the inner wall of the bulb and coaxial with the water-cooled induction coil and the annular support, the wall of the bulb cannot touch the coil.

As shown in Fig. 5, the annular support 19 and the high frequency coil 15 may conveniently be formed into a unit by a clamp 21 which engages the annular support and also grips the legs of the heating coil by means of insulating sleeves or in other suitable ways. As indicated diagrammatically in Fig. 5, the heating coil is connected to an oscillator or high frequency generator 22 which will deliver sufficient current of the desired frequency such as 600 kilocycles to bring the edge of the punch to the desired temperature.

The contact button is preferably sealed into the hole in the side wall of the bulb by means of high frequency induction heating as shown in Figs. 6 and 7. The contact button 23, which may be made of any metal which will seal to glass and preferably of some of the known chrome-iron alloys which have a coefficient of expansion and other properties suitable for a good glass-to-metal seal, is placed in the punched out hole 16 where its edge slightly overlaps the edge of the hole. The sealing-in may be done with the high frequency induction coil 15 by holding the bulb under and close to the coil and coaxial with it, as indicated in Fig. 6, to enable the high frequency field of the coil to bring the edge of the contact button and the adjoining glass to sealing temperature. In this way the button is heated and sinks into the glass and the adjoining glass is thoroughly melted and forms a bead or ridge 24 over the edge of the button so that a good glass-to-metal seal is made. Sometimes it is advantageous to pull the button outward to a slight extent while the glass of the seal is soft to work the seal to some extent and also to position the contact button slightly above the outer surface of the bulb wall. The bulb with the sealed-in button contact is then annealed from 1 to 2 minutes to a temperature of 375 to 400° C., and then for a similar length of time at about 300° C. After the bulb cools down it is placed in an oven for the usual annealing treatment for bulbs of this kind.

My method of perforating a sheet of glass by pressing through it a punch heated by induction from a high frequency coil may be carried out in various ways and the practice of my method may be facilitated by the use of various forms of fixtures or other apparatus. For example, and merely for purposes of illustration, I have shown in Fig. 1 a fixture or jig which I have found to be useful and convenient in practicing my invention to make holes in the side wall of a cathode ray bulb. In this particular device the punch holder 13 is mounted on the end of a swinging arm 25 pivoted on a pivot 25′ on a frame or fixture rod 26 which acts as a bulb carrier for a bulb placed over it. This particular fixture rod has two parallel side members 27 spaced a distance slightly greater than the width of the arm 25 so that the arm can swing between the side members about its pivot through an angle of about 90° between the position shown in full lines on one side of the rod 26 and the position 25a shown in dotted lines on the other side of the rod. The frame or fixture rod is rotatably mounted in a frame socket 28 having a shoulder or stop 29 in position to be engaged by a projecting pin 30 on the fixture rod. The frame socket is held in a bracket 31 on a base 32, and preferably is pivoted in the bracket 31 so that the angle of the fixture rod with the base may be varied at will.

Contact of the cathode ray bulb with the metal of the fixture rod or frame 26 is undesirable and to prevent such contact a sleeve 33 of refractory insulation and longer than the bulb surrounds the fixture rod, with its end projecting beyond the inner end of the fixture rod so that when the end face of a bulb on the fixture rests against the end of the insulating sleeve 33 the bulb is properly positioned. To permit the arm 25 to swing far enough on both sides of the axis of the fixture rod the sleeve 33 is provided with diametrically opposite slots 34 in registry with the space between the side members 27 of the fixture rod. The arm 25 is swung about its pivot by a connecting rod 35 slidable endwise in the

frame and actuated by a handle **36**, which is pivoted on the rod **26** and through the connecting rod **35** controls the arm **25** and swings it between the frame members **27** and through the slots **34** from one side to the other of the fixture rod. The handle **36** is an actuating means for the punch holder and also for tuning the rod **26** back and forth in the socket **28** as indicated by the double pointed arrow A. By manipulating the handle **36** the rod **26** may be turned from the position shown in full lines and the parts mounted on it brought into the dotted line positions **25***a*, **35***a* and **36***a*.

In practicing my invention with the aid of this fixture, the bulbs are pre-heated to about 275° to 300° C. and placed over the fixture rod as shown in Fig. 1. The punch **11**, heated to about 300° C., has previously been placed on the punch holder **13** which at this time is close to the sleeve **34** and is pointing upward because the fixture rod is in the loading position 180° from the position shown in full lines. After the bulb is in place, the handle **36** is moved back and toward the socket **28** into the position **36***a* shown in dotted lines, to swing the arm **25** upward, thereby swinging the punch holder with the punch on it into the dotted line position **25***a* where the punch rests lightly on the inner wall of the bulb. The fixture rod is turned by means of the handle **36** through an angle of 180° into the position shown in full lines while the punch, pressed lightly against the bulb, slides along the wall of the bulb. This half turn of the fixture rod **26** brings the handle **36** from the dotted line position **36***a* to the full line position, the pin **30** on the fixture rod up against the shoulder **29** of the bracket, and places the punch **11** just above the center of the induction or work coil **15**, as shown in full lines. During this half rotation of the fixture rod the bulb is stationary but the punch, kept in place on the holder by a light pressure exerted on the holder **13** through the handle **36**, slides over the inner wall of the bulb until it is centered over the induction coil. The oscillator or high frequency generator **21** is then energized, the punch is heated by high frequency induction, thereby heating and softening the glass in contact with the edge of the punch, and is then pressed through the side wall of the bulb by light pressure exerted through the handle **36**, finally going through the coil **15** and dropping off the holder into the pan of water, where the glass cracks off and the punch is ready for re-use. The pressure exerted on the punch to force it through the side wall of the bulb can be regulated by the operator. In some cases it has been found that a slight increase in pressure just as the punch goes through the wall of the bulb contributes to the formation of a clean-cut hole. After the hole is punched the bulb is quickly removed from the fixture and the area around the hole is heated by a gas flame to relieve any strains set up by the punching operation. This heating should be done within four or five seconds after the hole is punched to avoid the formation of cracks around the hole.

I have found that in the manufacture of cathode ray tubes the whole process of punching a hole in the side wall of the bulb and sealing a button contact in the hole can be carried out in about 1 minute, while the same procedure carried out with the conventional method of using gas fires requires at least 2 minutes. Comparatively little time is required to train operators to practice my invention with the aid of the fixture shown in Fig. 1 and the seals produced are much more uniform in appearance and quality than those made by the conventional method using gas fires.

I claim:

1. The method of perforating a sheet of glass which comprises placing a concave metal punch with its edge in contact with the glass, heating the edge of the metal punch by induction to a temperature at which the glass adjoining said edge is softened, and pressing the heated punch through the softened glass.

2. The method of perforating a sheet of glass which comprises placing a metal punch having a concave end with the edge of said end in contact with the glass, heating the edge of the metal punch inductively by a high frequency coil on the opposite side of the sheet and in registry with said edge to a temperature at which the glass adjoining said edge is softened, and pressing the heated punch through the softened glass.

3. The method of making a circular hole in a sheet of glass which comprises placing a metal punch having an annular concave end with the edge of said end in contact with the glass, heating the edge of the metal punch by a single-turn high frequency coil of an inner diameter greater than said punch and coaxial with said punch to a temperature at which the glass adjoining said edge is softened, and pressing the punch while hot through the softened glass and through said coil.

4. The method of making a circular hole in the wall of the glass bulb which comprises placing a metal punch having a concave end with the edge of said end in contact with the inner wall of said bulb, heating the edge of the metal punch by a single-turn high frequency coil on the outside of the bulb and coaxial with the edge of said punch to a temperature at which the glass adjoining said glass is softened, supporting the wall of said bulb on an electrically non-conductive support having a hole larger than said punch and coaxial with and surrounding said coil, and pressing said punch while hot through the softened glass.

5. Apparatus for perforating the wall of a glass bulb comprising a punch holder adapted to be inserted in a bulb, a concave metal punch adapted to be mounted on said holder in position to engage the bulb wall, means for producing relative movement of said holder and said bulb to place the concave punch with its edge against the bulb wall, and a high frequency coil positioned outside the bulb and coaxial with said punch when said punch is in contact with the bulb wall to heat by induction the edge of said punch.

6. Apparatus for perforating the wall of a glass bulb comprising a bulb carrier adapted to be inserted in a bulb, a punch holder movably mounted on said carrier to move transversely of the wall of the bulb on said carrier, a concave metal punch loosely mounted on said holder, means for moving said holder to hold the edge of said punch against the inner wall of the bulb, and a high frequency single-turn coil of an inner diameter greater than the diameter of said punch positioned to be outside the wall of a bulb on said carrier and coaxial with the punch when said punch is in contact with the inner wall of said bulb.

7. Apparatus for perforating the wall of a glass bulb comprising an elongated bulb carrier adapted to be inserted in a bulb and mounted to rotate about its longitudinal axis, an arm pivoted on said carrier to swing transversely of the

axis of rotation of said carrier, actuating means on said carrier for at will swinging said arm about its pivot, a punch holder on the free end of said arm, a concave metal punch adapted to be loosely mounted on said punch holder, and a single-turn high frequency induction coil of an inner diameter greater than the outer diameter of said punch and coaxial with said punch on said holder when said punch engages the wall of a bulb on said carrier.

8. Apparatus for perforating the wall of a glass bulb comprising a bulb carrier adapted to be inserted in a bulb, a punch holder mounted on said carrier to move transversely of said carrier toward the wall of a glass bulb on said carrier, said holder comprising a punch support and a pin projecting from said support in a direction of movement of said holder, a punch formed as a shallow metal cup having in its bottom a central hole slightly larger than said pin, and a high frequency induction coil positioned to heat by induction the edge of said punch on said holder.

9. The method of perforating an article of non-metallic fusible material, which comprises the steps of causing a metal member to rest and press against a surface of the article, and creating an alternating electric field of suitable frequency about the member to cause the same to melt its way through the article.

10. Apparatus for perforating the wall of a glass bulb comprising a metal punch, a holder for said punch, said holder being mounted for relative movement with respect to said bulb wall whereby said punch is placed in contact with said wall, and means for creating an alternating electric field of suitable frequency about the punch to cause the same to melt its way through the wall, said means being disposed outside of said bulb and in coaxial relation with respect to said punch.

11. Apparatus for perforating the wall of a glass bulb having an opening in registry with an axis thereof, comprising an elongated member having an end portion adapted to be extended into said bulb through said opening for engaging inner wall portions of said bulb, an arm pivotally mounted on one end thereof on said end portion of said member for rotation on an axis transverse to the longitudinal axis of said member whereby said arm is adapted to swing to and away from the wall of said bulb, a punch holder on the other end of said arm, a punch mounted on said holder with its face opposite a wall portion of said bulb, said punch engaging said wall

portion in response to rotation of said arm, a high frequency induction coil disposed outside of said bulb and adjacent thereto, and means for manually rotating said elongated member on its longitudinal axis to dispose said punch in coaxial relation to said coil.

12. Apparatus for perforating the wall of a glass bulb comprising a single turn high frequency coil, means for supporting said coil in a horizontal plane, said coil comprising a support for said glass bulb, an elongated member adjustably supported to have one end extend into said bulb, an arm pivotally mounted on said member adjacent the said one end thereof for rotation in a plane of said elongated member, a punch holder mounted on one end of said arm, a punch loosely mounted on said punch holder, means for rotating said arm for positioning said punch against said glass bulb, and means for rotating said elongated member on its longitudinal axis for bringing said punch into registry with said coil.

13. The method of perforating an article of non-metallic fusible material which comprises the steps of placing a metal punch in pressing contact with a surface of said article and creating an alternating electric field of suitable frequency about the punch to heat the same and cause it to melt its way through the article.

14. The method of perforating a glass article which comprises the steps of pressing the edge of a concave punch against a surface of said article and heating said edge by induction to cause it to melt its way through said article.

15. The method of perforating an article of non-metallic fusible insulating material, which comprises the steps of pressing the edge of a metal concave punch against one surface of said article, and heating said edge of said punch by a high frequency induction coil supported against the opposite surface of said article to cause said edge to melt its way through said article.

GEORGE N. PHELPS.

REFERENCES CITED

The following references are of record in the file of this patent:

UNITED STATES PATENTS

Number	Name	Date
810,474	Doane	Jan. 23, 1906
1,722,010	Littleton et al.	July 23, 1929
2,374,706	Saslow	May 1, 1945