United States Patent [19]

Glover

[11] **3,780,890**

[45] **Dec. 25, 1973**

[54] **FURNACE CHARGING APPARATUS**

[75] Inventor: **Warren E. Glover,** Lakewood, Ohio

[73] Assignee: **Arthur G. McKee & Company,** Cleveland, Ohio

[22] Filed: **Mar. 1, 1972**

[21] Appl. No.: **230,606**

[52] **U.S. Cl.** ..... **214/36,** 193/31 R, 266/27

[51] **Int. Cl.** **F27b 5/12**

[58] **Field of Search** ..... 214/18 V, 35 R, 36, 214/37; 193/14, 23, 29, 31 R; 266/27

[56] **References Cited**

UNITED STATES PATENTS

3,706,387	12/1972	Tokarz	214/37
3,482,714	12/1969	Oguri et al.	214/37
3,077,274	2/1963	Kitzrow	214/35 R

Primary Examiner—Robert G. Sheridan

Attorney—Paul S. Sessions et al.

[57] **ABSTRACT**

An apparatus for charging particulate burden material into a shaft furnace, such as a blast furnace, having a generally vertical axis. Several individual port means are spaced around the axis and mounted on the upper portion of the furnace above two superposed furnace bells in superposed stationary hoppers. Each of the port means has an upwardly open mouth, and individual valve means for closing the port means gas tight and for opening it independently of other port means so it can provide a flow of material into the furnace. Two externally supported non-rotatable independently laterally reciprocable chutes are mounted above the port means. Each chute has a plurality of lower discharge openings each of which is positionable over and alignable with the mouth of selected port means by proper reciprocable movement of the chute, to discharge material into the mouth so that material will pass from the chute into the furnace when the port means is open; and each chute has a corresponding number of upper openings adapted to receive charge material deposited in the chute and discharge it through the discharge opening that is aligned with an open port means. A stationary hopper is mounted above each chute to receive charge material from suitable material supply means such as a skip car or conveyor, and discharge it into the proper chute opening.

27 Claims, 8 Drawing Figures

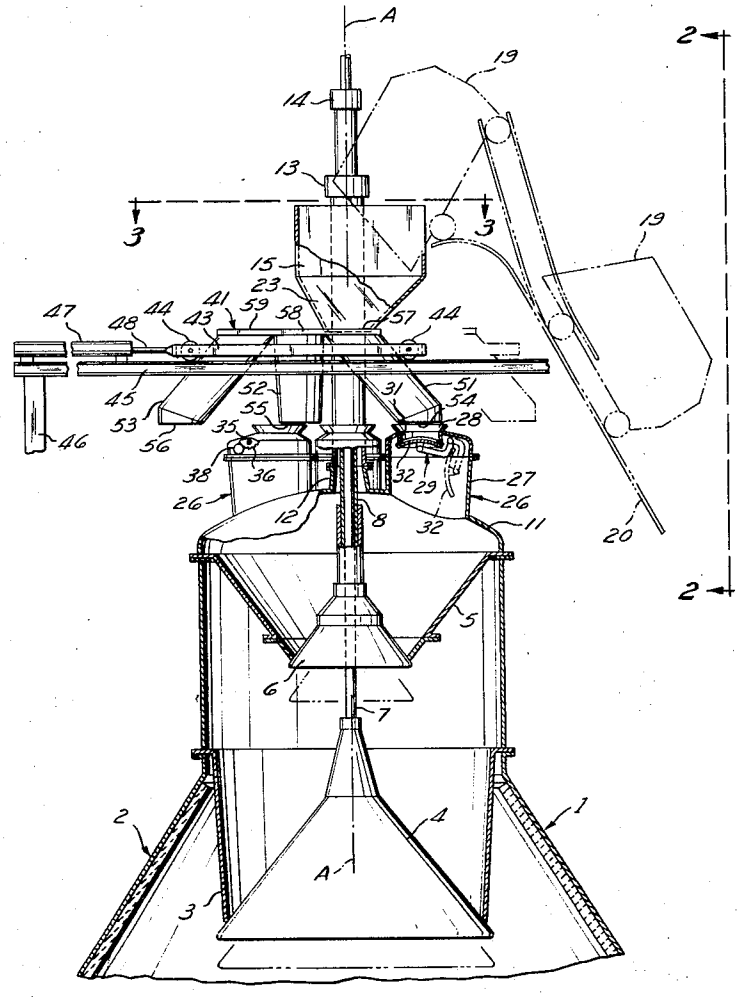

Fig. 1

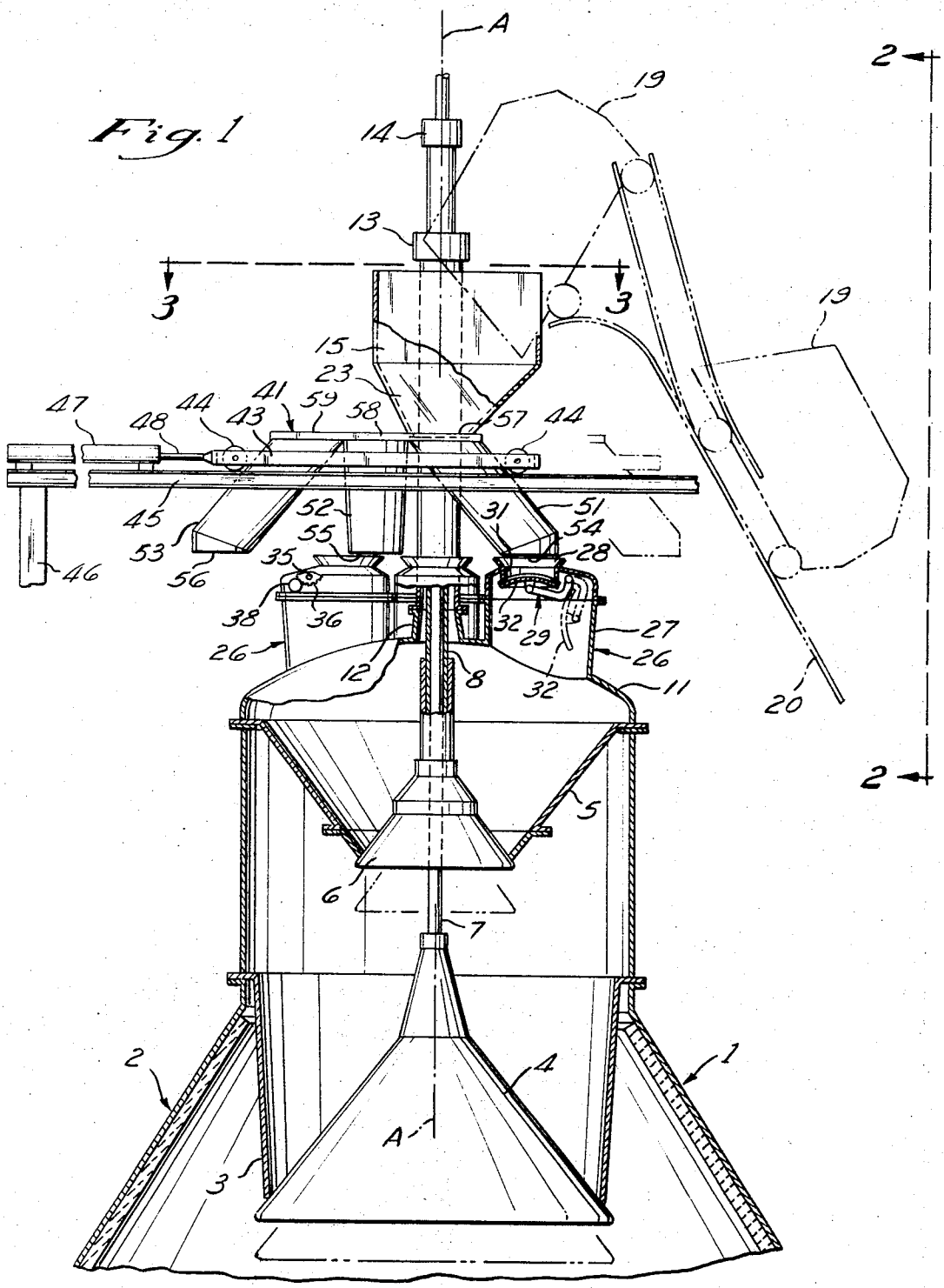
A
2
19
14
13
3
3
19
15
23
41
59
58
57
44
47
48
44
43
45
52
31
51
54
53
55
28
56
35
46
38
36
32
29
27
26
26
12
8
32
11
20
2
5
6
7
2
4
1
A
3

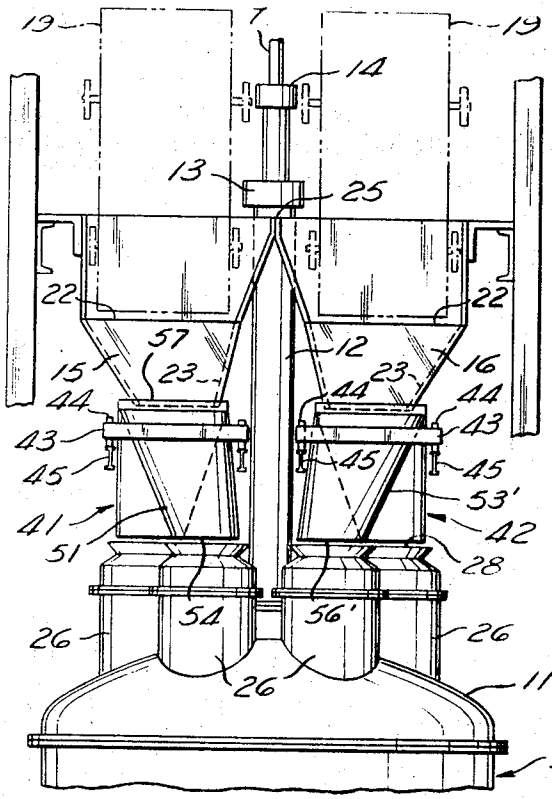
19
7
19
14
13
25
22
22
57
12
16
15
23
23
44
44
44
43
43
45
45
45
53'
41
42
51
28
54
56'
26
26
26
11
1

Fig. 2

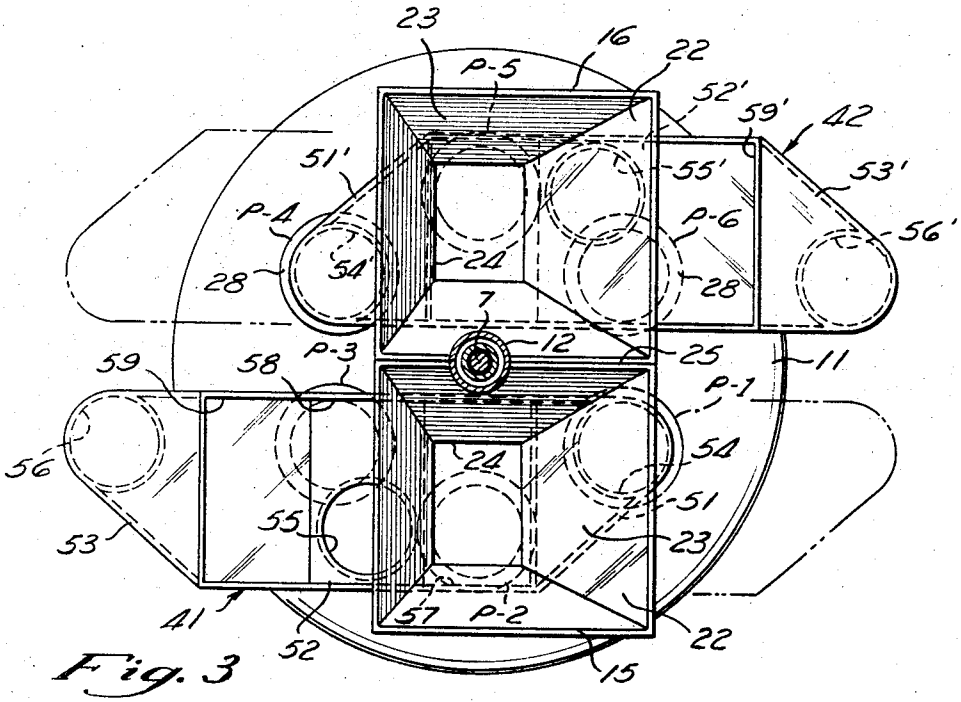
23
16
22
P-5
52'
59'
42
51'
55'
53'
P-4
P-6
56'
54
24
28
28
7
12
25
11
59
58
P-3
P-1
56
54
24
55
51
53
23
41
57
P-2
22
52
15

Fig. 3

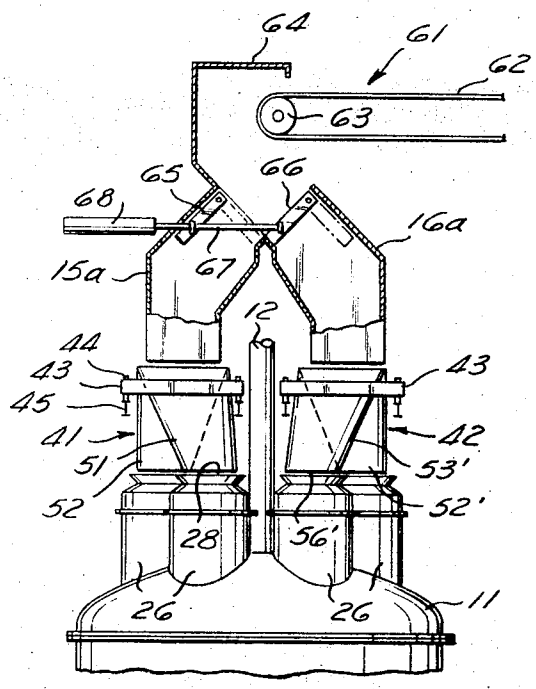
64
61
62
63
65
66
68
16a
15a
67
12
44
43
45
41
51
52
43
42
53'
52'
28
56'
26
26
11

Fig. 8

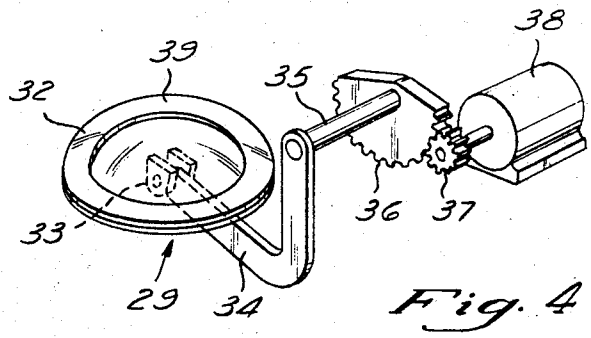
38
39
32
35
36
37
33'
29
34

Fig. 4

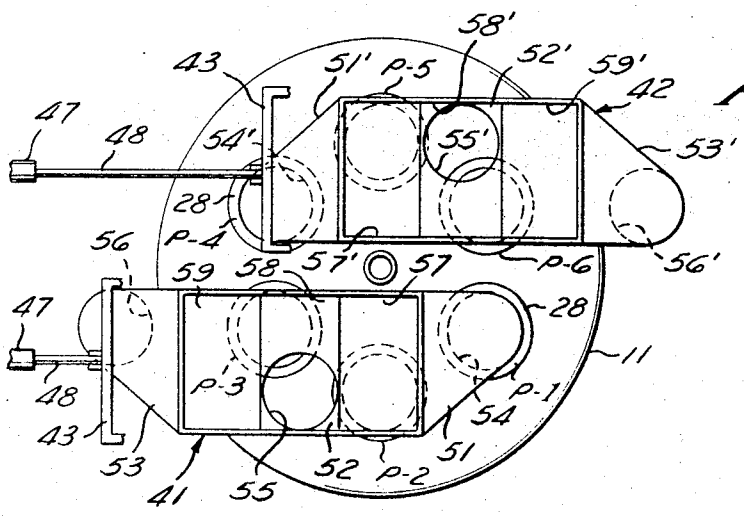

Fig. 5

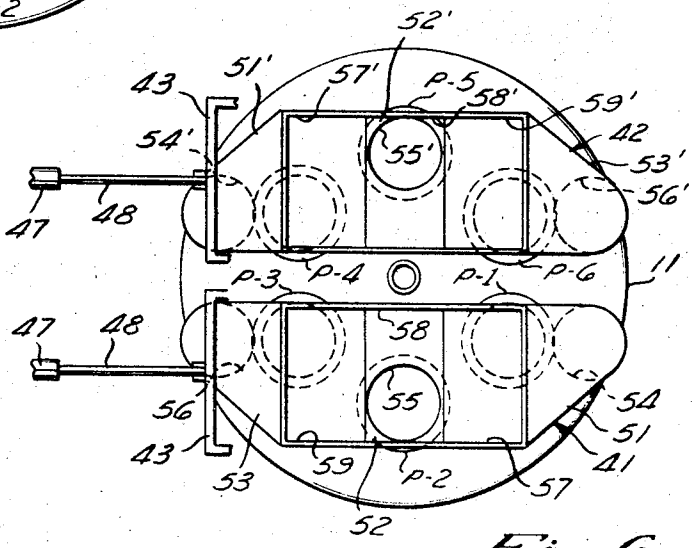

Fig. 6

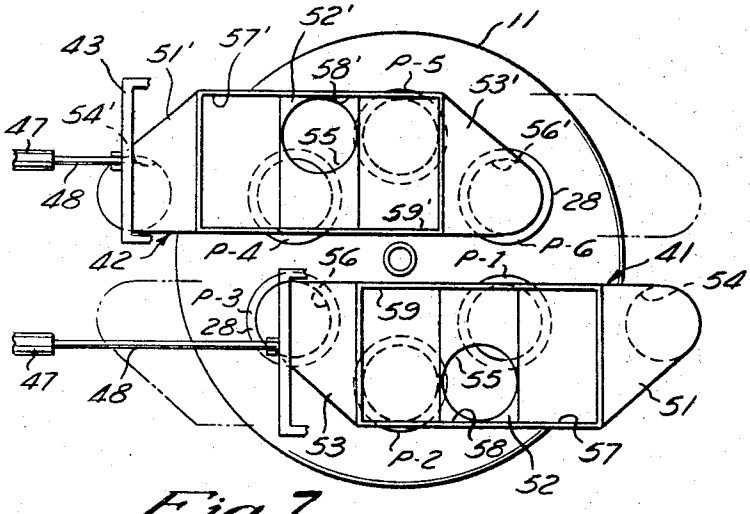

Fig. 7

FURNACE CHARGING APPARATUS

DISCLOSURE OF THE INVENTION

Field of the Invention

This invention relates to apparatus for charging burden material into a shaft furnace, and more particularly to apparatus for charging particulate burden material into a shaft furnace such as a blast furnace, to provide desired amounts and distribution of the material while preventing gas leakage from the furnace, even if the furnace operates under severe conditions as occur when the furnace has high internal gas pressure and is of large diameter.

BACKGROUND OF THE INVENTION

To achieve greater production and increased efficiencies and economies in blast furnace construction and operation, recent blast furnace designs have trended toward the use of substantially higher internal top pressures than have been heretofore common.

In new furnaces being designed or built, top pressures range as high as 30 pounds per square inch, hearth diameters range up to 50 feet or more, and iron outputs up to 6,000 tons per day or higher.

Moreover, there is a considerable demand for conversion of older furnaces to enable them to operate at considerably higher top pressures for greater efficiencies and outputs. Such conversions in general require the provision of top apparatus for charging materials and sealing against escape of gas that is different from the apparatus heretofore used. However, it is desirable that the new furnace top apparatus not exceed the height of the old replaced apparatus, to reduce the cost of the conversion by avoiding the necessity of replacing or repositioning other top equipment such a downcomers, bleeder valves, and the like.

These factors of high gas pressures and high productions, when accompanied by factors of large size in new furnaces or height limitations on converted older furnaces, impose severe problems in the design and operation of the charging apparatus of such furnaces to permit the rapid charging of required large quantities of burden material for high production and the desired distribution of burden material over the furnace cross-sectional area of the furnace for efficient high volume production of high quality iron, while preventing leakage of the gas at high pressures.

DISCUSSION OF PRIOR ART

For example, these factors cause substantial problems with the type of charging apparatus heretofore widely used, wherein a hopper the bottom of which is closed by a small bell is rotatably mounted above a larger hopper the bottom of which is closed by a large bell, the rotatable small bell hopper being sealed at its circumference to prevent internal furnace gases from leaking out. When higher gas pressures are used, tendencies toward leakage are intensified in this structure. The gas leakage problem is also accentuated if in large capacity furnaces the diameter of the small bell hopper is enlarged to permit handling at suitable high rates of the large amounts of burden material that must be charged into the furnace.

Various proposals have been made to overcome these problems, mostly involving eliminating rotation of the small bell hopper. In one design developed recently, both the large bell and small bell hoppers are

non-rotatable and respectively closed by non-rotatable large and small bells, and a rotatable chute is mounted inside the small bell hopper to deposit burden material on the small bell at the desired lateral position. Above the chute and in the top of the small bell hopper, there are one or more valves that can be closed to seal furnace gas, and can be opened to permit burden material to be discharged into the chute while it is rotating or while it is stationary to discharge at a desired location on the small bell. Stationary hopper systems are used above the valves.

In such apparatus, the chute is supported and driven from a rod that surrounds the two bell rods. Since triple supporting rods are therefore required, one of which must be rotatable, a complicated construction results that is not only expensive to build but also is subject to substantial maintenance problems. There is danger of breakdowns because of heat, dust or burden material which can cause jamming of the chute in a position where it cannot be moved to accomplish the desired depositing of the material at different locations around the furnace interior, so that the furnace cannot be successfully operated. Moreover, the chute can be reached only with great difficulty for maintenance repair or replacement, since it is inside the hopper. Furthermore, the design does not readily lend itself to the conversion of older furnaces to high top pressure operation.

In another recently developed design, there are stationary superposed small and large bell hoppers, and another stationary hopper, fixed above the small bell hopper, that has branched discharging ports at its bottom. Each of these discharging ports is closed by a material cutoff valve and by a gas cutoff valve. Each discharging port opens into the fixed small bell hopper when its valves are open. A rotatable chute is mounted within the upper portion of this branched upper hopper. In operation, burden material from the rotatable chute, usually while the chute is rotating, is deposited in the branches of the upper hopper, being supported by the material cutoff valves. At the appropriate time, both the material cutoff and gas cutoff valves of a selected hopper branch and port are opened to permit material to discharge into the small bell hopper to deposit material on the small bell at the desired location.

While in this design the rotatable chute may be supported and rotated by means located externally of any bell hopper the fact that the material is deposited inside of a hopper and held there by several cutoff valves imposes difficulties and disadvantages, as because of complications in providing and operating several material cutoff valves and because these valves can jam due to the material supported by them. Moreover, at least the lower end of the chute is in the branched hopper at all times and could become jammed or clogged by material in the hopper. If the chute should jam, clog, or otherwise become damaged, it is a difficult, time-consuming and costly operation to get access to that portion of the chute for corrective action. Moreover, the operation of the material cutoff valves and gas cutoff valves must be carefully coordinated to prevent burden material discharging from the chute from striking and damaging or destroying the gas cutoff valve if the material cutoff valve should be opened in a particular branch port before the gas cutoff valve. Furthermore, this design does not readily lend itself to the conversion of older furnaces to high top pressure operation.

SUMMARY OF THE INVENTION

It is an object of the invention to provide apparatus for charging particulate material into a shaft furnace such as a blast furnace, that will operate efficiently in small or large furnaces to charge desired quantities of particulate burden material into the furnace in any of a wide range of distribution patterns in the furnace, while the furnace is operating under gas pressures as high as any contemplated at present or the foreseeable future. Another object is the provision of such apparatus which can be built to fit height limitations of older furnaces that are to be converted to high top pressure operation. It is a further object of the invention to avoid the problems and disadvantages of prior art apparatus such as those described above.

The present invention provides apparatus for charging particulate burden material into a shaft furnace having an upper furnace portion with a generally vertical axis, which apparatus includes a plurality of means providing ports mounted on the upper furnace portion and spaced around the axis, each of the port means having an upwardly open mouth, valve means for closing each port means gas tight and for opening each of the port means independently of other means to permit flow of material through the port means unimpeded by the valve means and an externally supported and driven chute reciprocably mounted above the port means. The chute has a plurality of lower discharge openings each adapted to be moved over the mouth of a selected port means and to discharge burden material into the mouth of such port means so that the material will pass by gravity from the chute into the furnace, preferably into a bell hopper such as a small bell hopper above a large bell hopper, when the gas sealing valve of such port is open; the chute also has a plurality of upper openings each adapted to receive burden material that discharges through a lower chute opening while it is aligned with a selected port means. The apparatus also has means for depositing burden material into the upper opening of the chute that communicates with the lower opening aligned with its selected port means. The chute is not enclosed in any hopper, and is supported and reciprocated externally of any hopper so the chute is readily accessible for maintenance and repair and can be free of any tendency to be jammed or clogged by charge material in a hopper. Preferably, a plurality of chutes are used, such as two chutes reciprocable in parallel paths, each of which chutes supplies material to half the port means of the furnace.

There is no rotatable hopper that can provide gas sealing problems. There is no chute contained within any hopper that prevents access to the chute only with difficulty or that can retain material that will jam or clog the chute. The valve means in the furnace port means need only be used for sealing against escape of gas. There are no valves in the furnace port means that are required to hold material discharged from the chute, since the material entering the chute only discharges through a selected port means into the furnace when the port means is open.

Consequently, apparatus can be made more simply than prior apparatuses. The problems of sealing against high gas pressures are simplified because there is no member such as a hopper of large circumference that must be sealed against gas leakage, but several considerably smaller valves able to withstand readily any force caused by high furnace pressure. By providing a proper number of port means preferably at least four, and proper cycling of the position of each chute, the desired distributions of material within the furnace can be readily achieved even though the furnace has a large cross section and diameter.

Moreover, apparatus embodying the invention can be made of sufficiently low overall height so it can be installed on existing furnaces to replace existing charging equipment without major alterations to other top structure.

BRIEF DESCRIPTION OF THE DRAWINGS

These and other advantages of the invention will become apparent from the following description in connection with the accompanying drawings in which:

FIG. **1** is a vertical section through the upper portion of a blast furnace, generally along line **1—1** of FIG. **2**, illustrating a preferred type of furnace charging apparatus embodying the invention and utilizing skip car material supply means;

FIG. **2** is a view from line **2—2** of FIG. **1** and to the same scale;

FIG. **3** is a plan section along line **3—3** of FIG. **1** but to a larger scale;

FIG. **4** is a somewhat diagrammatic perspective view to a larger scale, showing means for actuating the gas sealing valve of one of the port means;

FIGS. **5, 6** and **7** are plan views, generally along the section line from which FIG. **3** is taken but to the scale of FIGS. **1** and **2** and more schematically shown than FIG. **3**, showing three separate lateral positions of each of the two chutes of the illustrated embodiment, and how the chutes when so positioned can deliver charge material to all six of the ports of the illustrated embodiment, each chute delivering material to one port when it is in one of the positions; and

FIG. **8** is a view generally corresponding to FIG. **1** but to a smaller scale, showing another embodiment in which material is delivered to two reciprocable chutes by a belt.

DESCRIPTION OF PREFERRED EMBODIMENTS

In the apparatus of FIG. **1**, a blast furnace **1** of otherwise known construction has an upper portion **2** comprising a known stationary large bell hopper **3** the bottom opening of which can be opened and closed by large bell **4**, and above hopper **3** another stationary small bell hopper **5** having a bottom opening that opens into the top of hopper **3** and can be opened and closed by small bell **6**, the bells being symmetrical about axis A of the furnace.

Neither of hoppers **3** and **5** rotate. Large bell **4** is supported, lifted and lowered by a bell rod **7** in known manner. Small bell **6** is supported, lifted and lowered in known manner by a tubular bell rod **8** slidably surrounding bell rod **7** in known manner. The bells do not rotate while they close their respective hoppers; however, if desired, either or both may be rotated when lowered in hopper opening position, as to equalize wear. Known means, not shown, are provided for actuating the bell rods **7** and **8** to raise and lower their bells as required, and for rotating the bells if desired when they are lowered.

The top wall **11** closing the small bell hopper **5** has a tubular portion **12** surrounding tubular bell rod **8** and extending upwardly to a location generally above the

charging apparatus. The axes of the rods and portion 12 coincide with axis A. To prevent escape of furnace gas past the bell rods 7 and 8 and tubular portion 12, sealing means 13 operates between tubular portion 12 and reciprocable small bell rod 8, and sealing means 14 operates between bell rod 8 and bell rod 7 of the large bell. Since these sealing means may be conventional, no further description is required.

Two side-by-side upper fixed hoppers 15, 16 (FIGS. 1, 2, 3) supported by frame members at a suitable distance above top wall 11 of the furnace, are adapted to receive particulate burden material to be charged into the furnace, each from a suitable source of supply such as one of a pair of conventional skip cars 19 alternately traveling up and down tracks 20.

Preferably, as shown in FIG. 3, each hopper 15 and 16 has an upper opening 22 that is generally rectangular in plan and is shaped and adapted to receive burden material from one of the adjacent skip cars 19. The lower portion 23 of each illustrated hopper 15, 16 slopes downwardly and inwardly to define (FIG. 3) a fixed generally rectangular bottom opening 24 at a fixed predetermined lateral location relative to the upper furnace portion. Adjacent upper portions of the hoppers flare outwardly and are joined at ridge 25 and to tubular portion 12 to prevent entrance of charge material there.

A plurality of port means 26 are disposed around the axis A and fixed gas-tight to the top wall 11 of the small bell hopper 5 of the furnace. Preferably there are at least four, and desirably six as in the illustrated embodiment, of port means to insure good distribution of burden material in the furnace. Each port means comprises a housing 27 (FIG. 1) having an upwardly open outwardly flared or divergent mouth 28, the mouths preferably all being of the same size and shape and preferably circular in cross section. The upper edges of all the port means lie in the same horizontal plane, and preferably they are also equiangularly and equidistantly spaced around axis A (FIG. 3). Each port means 26 also includes a gas sealing valve 29 (FIGS. 1, 4) mounted in housing 27 and adapted to close the lower end of a passage 31 the upper end of which terminates in mouth 28.

In the illustrated embodiment (FIG. 4) each valve 29 comprises a stationary valve seat at the lower end of passage 31 and an upwardly convex movable closure member 32 that is pivotally mounted by lug 33 on an offset curved arm 34 that is fixed to a horizontal rotatable shaft 35 extending to the outside of housing 27 of the port means but sealed by conventional means against gas leakage from the housing. While the shaft may be rotated as required to open and close the valve 29 by various known means, that shown comprises a gear segment 36 rigidly mounted on shaft 35 and engaging a gear 37 that is rotated as required by a motor 38 which may be a conventional type energized as required by known means requiring no description. If desired, the valve seat 31 or the upper surface of closure member 32 may be covered in whole or in part where they meet with sealing or gasket material such as synthetic rubber to aid in providing a tight gas seal; an annular layer 39 of such material is shown on closure member 32 in FIG. 4. Use of such sealing material that might otherwise be damaged by substantial heat is made possible because the valves 29 are so located that they are not exposed to harmful heat.

The arrangement, including the offset curved arm 34 is such that when a valve of a port means is in the closed position as shown in full lines in FIG. 1 it closes passage 31 and hence the mouth 28 of the port means and provides a gas-tight seal even at high pressures in the furnace, the force on closure member 32 exerted by the gas pressure aiding in keeping the valve closed gas-tight; and when the arm 34 is turned to the valve open position shown in broken lines in FIG. 1, all portions of the valve completely clear the passage and permit an uninterrupted and unimpeded flow of burden material through the port means into small bell hopper 5; and any sealing layer 39 is not contacted or damaged by the charge material. Each valve is operable independently of the other valves, and the valves can be made so that when all valves are closed, even if the pressure in the small bell hopper is equivalent to a high furnace pressure, there is no gas leakage.

The embodiment of FIGS. 1 to 3 also includes two reciprocable chutes 41 and 42 respectively located below stationary hoppers 15 and 16 and above the port means 26. Each chute is adapted to discharge burden material from its associated hopper 15 or 16 into a selected one of three port means 26 that are served by the chute. Each chute 41, 42 is rigidly mounted in a movable frame 43 supported by wheels 44 traveling on parallel rails 45 located at the sides of the chute and supported by portion 46 of a furnace frame structure. Each chute can therefore move horizontally on its rails in a fixed linear path; the paths for both chutes in the illustrated apparatus being straight and parallel. Each chute is moved as required to the desired position in its path by a fluid operated cylinder 47 fixed to frame portion 46 and connected to chute frame 43 by piston rod 48. Each fluid cylinder 47 is powered and controlled to move its chute as and when required by suitable conventional means not shown.

Chute 41 comprises (FIGS. 1, 3) three downwardly extending chute portions 51, 52 and 53, respectively having lower openings 54, 55 and 56 lying essentially in a common horizontal plane at the bottom of the chute and top openings 57, 58 and 59 lying essentially in a common horizontal plane at the top of the chute. Each chute portion is inclined as a whole from the vertical, and designed so that when the upper opening of any chute portion is brought under the lower opening 24 of the fixed hopper 15, the corresponding lower opening of that chute portion is aligned with the mouth 28 of a preselected one of the port means 26 predetermined to have burden material pass into it from such lower chute opening. The lower openings of all the chute portions are shaped, and the flared upper ends of the mouths 28 are shaped and sized, so that material can discharge into the open mouth of the port means with no loss of material passing from hopper 15 to chute 41 and into the port means. Therefore, all lower chute openings 54, 55, 56 preferably are of identical circular cross section, and all of the flared upper ends of mouths 28 are circular and somewhat larger in cross section.

As apparent from FIGS. 3, 5–7, portion 51 of reciprocable chute 41 discharges burden material from stationary hopper 15 into only the port means 26 that for convenience is designated P–1 when upper opening 57 of chute portion 51 is aligned with bottom opening 24 of hopper 15 (FIG. 5); chute portion 52 of chute 41 discharges material only into the port means designated

as P–2 when top opening 58 of portion 52 is aligned with bottom opening 24 of hopper 15 (FIG. 6); and chute portion 53 discharges material from hopper 15 into only the port means designated as P–3 when chute top opening 59 is aligned with bottom opening 24 of hopper 15 FIG. 7).

The other chute means 42 is identically shaped, including inclined chute portions 51', 52' and 53' respectively having bottom openings 54', 55' and 56' and top openings 57', 58' and 59'. Its chute portions are adapted to discharge burden material received by them from hopper 16 into specific ones of the port means 26 designated as P–4, P–5 and P–6 when the upper opening of the chute portion is aligned with the bottom opening 24 of hopper 16, as is apparent from FIG. 3 in conjunction with FIGS. 5, 6 and 7.

In view of the above described features of design and relationship of the parts, by proper reciprocation of the chutes 41 and 42 relative to the furnace 1 and to each other, it is possible to achieve various cycles of operation for introducing burden material deposited in the stationary hoppers 15 and 16 into various ones of the port means 26 designated as P–1 to P–6 inclusive in the illustrated embodiment.

One illustrative mode of operation can be understood in connection with FIGS. 5 to 7. In this mode of operation, chute 41, while empty of burden material and while no burden is being deposited in stationary hopper 15 by a skip car 19, is moved by actuation of its fluid cylinder 47 so upper opening 57 of chute portion 51 is directly beneath bottom opening 24 of hopper 15 and so bottom opening 54 of chute portion 51 is directly above the flared open mouth 28 of the port means 26 that is designated as P–1, as shown in FIGS. 3 and 5.

Simultaneously, or at any suitable time, chute 42 is moved by its cylinder 47 to a position so that its upper opening 57' of chute portion 51' is below bottom opening 24 of stationary hopper 16 and bottom opening 54' of chute portion 51' is directly over the flared open mouth 28 of the port means designated as P–4, which is diametrically opposite port means P–1. The valves 29 of all port means are closed and both the large and small bells are in their hopper closing positions during this time. During or before this time small bell hopper 5 has been filled by suitable known means with clean gas such as steam, clean blast furnace gas, or nitrogen at a pressure approximately equal to even slightly exceeding the gas pressure in the remainder of the furnace. The large bell hopper 3 contains gas at furnace pressure.

Thereafter, the gas pressure in the small bell hopper 5 is relieved by suitable known means to atmospheric pressure and gas seal valves 29 of the port means designated as P–1 and P–4 are opened and burden material from the skip cars 19 is discharged into hoppers 15 and 16, from which the material passes by gravity through the chute portions 51 and 51' of chutes 41 and 42 into the small bell hopper 5 where it is retained by the closed bell 6.

Thereafter, the gas seal valves 29 of port means P–1 and P–4 are closed and the small bell hopper is pressurized in known manner with clean gas, after which the small bell is lowered to discharge materials from the small bell hopper into hopper 3 onto large bell 4. The above steps may be carried out one or more times as desired or required by the charging cycle. In the usual process, several skip carloads of burden material will be deposited on the large bell.

After the desired amount of burden material has been deposited on the large bell, and after the small bell has been raised to its upper closing position and the small bell hopper pressurized with clean gas if desired, the large bell is dropped as shown in broken lines in FIG. 1, to deposit the material in the furnace. During all of this time the large bell hopper 3 has contained gas under the pressure of the furnace gas below the large bell. This gas is introduced in the large bell hopper by conventional means not shown. This cycle with the chutes in this position may be repeated as often as desired.

Thereafter during or after dropping the large bell, and while no burden material is deposited into the upper hoppers 15 and 16, while the gas valves 29 of all port means are closed gas tight the chutes 41 and 42 while empty are moved to the positions illustrated by FIG. 6 in which their middle chute portions 52 and 52' are located so their upper openings 58 and 58' are aligned with the bottom openings 24 of the stationary hoppers 15 and 16, and their lower openings 55 and 55' are directly over the flared mouths 28 of the port means 26 designated as P–2 and P–5. During or before this time the small bell hopper has been pressurized with clean gas, and the large bell hopper contains gas at furnace pressure. The gas pressure in the small bell hopper is then relieved to atmospheric pressure, gas seal valves 29 of the port means designated as P–2 and P–5 are opened, and burden material from skip cars 19 is discharged into hoppers 15 and 16 from which it passes through chute portions 52 and 52' of chutes 41 and 42 through the mouths of port means P–2 and P–5 into the furnace where the material is retained by the closed small bell 6. Thereafter the gas seal valves are closed and small bell hopper 5 is pressurized with clean gas after which small bell 6 is lowered to discharge its material onto large bell 4 in hopper 3. The above steps may be carried out one or more times as desired or required by the charging cycle. After the desired amount of charge material has been deposited on the large bell, and after the small bell has been raised to its hopper closing position and the small bell hopper pressurized with clean gas if desired, the large bell is dropped to deposit burden material in the furnace. This cycle with the chutes in this position may be repeated as often as desired.

Thereafter, during or after dropping of the large bell, and while no charge material is being deposited into upper hoppers 15 and 16, and while gas seal valves of all port means are closed, the chutes 41 and 42 are then moved to the positions shown in FIG. 7 in which the upper openings 59 and 59' of chute portions 53 and 53' are located directly below the openings 24 in the bottoms of hoppers 15 and 16 and the lower openings 56 and 56' of these same chute portions are directly over the flared mouths of the port means 26 that are designated as P–3 and P–6. After relieving of gas pressure in the small bell hopper while the small bell hopper is closed by the small bell, the valve means 29 of port means P–3 and P–6 are opened and burden material is deposited by skip cars into hoppers 15 and 16 from which it passes through chute portions 53 and 53' of chutes 41 and 42 and through the mouths of port means P–3 and P–5 into the small bell hopper 5 of the furnace. After one or more loads from each skip car are

thus deposited, the gas valves are closed, the small bell hopper is repressurized with clean gas and the small bell then is lowered to drop material onto the large bell that closes the large bell hopper; this portion of the cycle is repeated until the desired amount of material is deposited on the large bell. Thereafter, after all the valve means in all port means are closed, the small bell hopper pressurized with clean gas to match the pressure in the large bell hopper which contains gas at furnace pressure, the large bell is then dropped to deposit its charge material in the furnace. This cycle with the chutes so positioned may be repeated as often as desired.

The cycle described above may be repeated during the furnace campaign with all port means in the indicated sequence to achieve the desired distribution of desired charge material in the furnace. In the above cycle, moreover charging occurs through two diametrically opposite port means and substantially simultaneously; this provides substantial savings in time of charging, and in the amounts of clean gas used since fewer number of refillings of the small bell hopper with clean gas are required; this also results in desirable distribution of charge material on opposite sides of the furnace from diametrically opposite ports.

Of course, other modes of operation of the above described apparatus are possible, including those in which either or both reciprocating chutes move after each skip car load of material is deposited, or those in which more than one skip car load of material is deposited on the small bell before it is dumped, or those in which each chute is moved while the other chute is stationary until each chute discharges material through each of the several ports served by such chute.

In all of these processes, advantages are also provided because differences in, and duration of differences in, gas pressures above and below the bells are minimized, thus minimizing leakage of dust-laden gas past the bells that could cause abrasion or wear of the bells and possibilities of further leakage.

While in the embodiment described above material is deposited by skip cars into the upper hoppers **15** and **16** and passes from such hoppers through the chutes to selected port means, it is possible to deposit material in the upper hopper by other means.

FIG. **8** illustrates another embodiment in which burden material is supplied by a known type of belt conveyor assembly **61** in which belt **62** passes around end pulley **63** located in housing **64.** Burden material is supplied to the belt in known manner by known means. Burden material discharged from the belt into housing **64** passes to either of two stationary hoppers **15***a* or **16***a*, depending on position of diverting valve members **65** and **66.** In the illustrated embodiment each of the valve members **65** and **66** in each case is pivotally mounted at its upper end in an extended upper portion of one of the hoppers **15***a* and **16***a* and pivotally connected at its lower end to a common actuating rod **67** adapted to be moved reciprocably as desired by a known type of fluid powered cylinder **68.** The arrangement is such that as shown in FIG. **8** when hopper **15**a is opened by valve member **65** to receive material from the belt **62,** the other hopper **16***a* is closed by its valve member **66,** and vice versa. The diverting valve members **65** and **66** thus divert the material that is supplied by the belt to either one of the stationary hoppers **15***a* and **16***a* depending on the position of the diverting valve members, from which the material can pass through the suitably positioned reciprocable chutes **41** and **42** to the desired ones of the port means **26** that are designated as P–**1** to P–**6** inclusive. Chutes **41** and **42** and the portions of the embodiment of FIG. **8** below the chutes may be identical with those of FIGS. **1** to **7** and need no further description, particularly since corresponding parts have identical reference characters in both embodiments.

If desired, the charging operation cycles described above in connection with FIGS. **4–7** may be used, or any other suitable cycle. The arrangement can also be such that the belt **61** while running brings burden material continuously, or discontinuously in slugs.

The present invention overcomes disadvantages of prior apparatus, some of which were discussed above, and makes possible efficient, effective and rapid charging of burden material in a desirable distribution in a furnace, even if the furnace has large capacity or large diameter. Moreover, apparatus of the invention can be effectively used in furnaces operating at high gas pressures, with little if any gas leakage.

The chutes **41** and **42** may be relatively shallow and moved laterally parallel to the plane of the mouths of the port means as in the illustrated embodiments; for these reasons apparatus embodying the invention can be readily applied to older furnaces without increasing, and indeed in some cases with substantial reduction in, the height of the furnace top apparatus. The overall height of the furnace therefore need not be increased beyond its original height, and other portions of the furnace top such as downcomers, bleeder valves, or roofs need not be expensively modified or replaced.

Furthermore, apparatus embodying the invention makes possible modes of operation in which the amounts of dirty gas discharged into the atmosphere as well as the amounts of clean gas used for equalizing pressures discharged into the atmosphere can be greatly reduced, because the volume of the small bell hopper used for pressure equalization by clean gas and discharge of gas into the atmosphere is much smaller than the volume of the large bell hopper that is usually used for these purposes in conventional practice.

Prevention of gas leakage is simplified because there is no rotating hopper or other part of large diameter that must be circumferentially sealed against gas leakage, and because each of the gas seal valves **29** is small and located away from the heat and can be sealed by rubber-like or other sealing material. Moreover, when a gas seal valve is closed, the pressure of the gas below tends to keep it closed. The gas seal valves are located in the illustrated embodiment so that they are not subjected to harmful heat that can cause deterioration.

Construction is simplified and less costly, especially in large furnaces, than with many prior designs of apparatus intended for similar service. Little if any abrasion of bells occurs because there is little if any leakage of dust-laden furnace gas between any bell and its seat when the bell is closed. Indeed, in an operation as described above, there is no need for the large bell to be gas-tight, since pressures are the same on both sides of the bell so abrasion from gas leakage past the large bell is eliminated. The large bell will therefore have a much longer life than in conventional furnaces, which is a very important advantage since maintenance costs are reduced and production losses for large bell maintenance or replacement are greatly reduced.

Furthermore, as indicated, the reciprocable chutes may be supported and driven entirely from outside of the apparatus and no part of the chutes need be in a hopper, so that problems of maintenance or repair are greatly minimized because of easy accessability to the chutes.

Moreover, in emergency, the gas seal valves can be repaired without taking the furnace off pressure, since the valves are easily accessible and quickly replaced and since the furnace can be operated if necessary with the valves **29** open in a manner akin to conventional practice in which the large bell is used as a gas valve.

Various modifications apparent to those skilled in the art, in addition to those indicated, may be made in the apparatus and methods indicated above, and changes may be made with respect to the features disclosed, provided that the elements set forth in any of the following claims or the equivalents of such, be employed.

What is claimed is:

1. Apparatus for charging particulate charge material into a shaft furnace comprising an upper furnace portion; a plurality of port means, each having an upwardly open mouth, spaced laterally about the top of said furnace portion; valve means for closing each of said port means in gas sealing relation and for opening each of said port means independently of other port means; a chute mounted above said port means for lateral reciprocatory movement in a substantially straight lateral path, said chute having a lower discharge opening adapted to be laterally moved to close proximity to the mouth of a selected port means so that charge material can pass from said chute into said furnace when said port means is open, said chute having an upper opening adapted to receive charge material deposited therein that is discharged through said lower opening, said chute being supported and having essentially its entire lower portion thereof located externally of any hopper adapted to contain charge material; and means for depositing charge material into the upper opening of said chute.

2. Apparatus according to claim **1** comprising an upper hopper above said chute adapted to discharge material from said hopper into the upper opening of said chute; and means for depositing charge material into said hopper.

3. The apparatus of claim **2** in which said means for discharging material into said upper hopper includes skip car means.

4. The apparatus of claim **2** in which said means for discharging material into said upper hopper comprises conveyor means; and which apparatus comprises material cutoff means to prevent discharge of material from said upper hopper until the lower opening of said chute is over the mouth of a selected port means and the gas sealing valve means for said port means is open.

5. The apparatus of claim **1** in which said means for discharging material into said chute comprises skip car means.

6. The apparatus of claim **1** in which said means for discharging material into said chute comprises conveyor means.

7. The apparatus of claim **1** in which each of said valve means when open permits unimpeded flow of material through said port means into said furnace.

8. The apparatus of claim **1** in which there are at least four of said port means each having a mouth opening upwardly.

9. The apparatus of claim **1** in which there are six of said port means each having a mouth opening upwardly.

10. Apparatus for charging particulate charge material into a shaft furnace comprising an upper furnace portion; a plurality of port means, each having an upwardly open mouth, spaced laterally about the top of said furnace portion; valve means for closing each of said port means in gas sealing relation and for opening each of said port means independently of other port means; a chute mounted above said port means for lateral reciprocatory movement in a linear path, said chute having a plurality of lower discharge openings and an upper opening communicating with each of said lower openings, said lower openings being located so that by said lateral movement of said chute each lower opening can be brought into a position where it can discharge into the mouth of a predetermined selected one of said port means different from the other port means, said chute being supported and having essentially its entire lower portion thereof located externally of any hopper adapted to contain charge material, means for imparting said lateral reciprocatory movement in said linear path to said chute; and means for depositing charge material into the upper opening of said chute when its associated lower opening is in a position where it can discharge into the mouth of a predetermined selected one of said port means.

11. The apparatus of claim **10** in which said chute has a plurality of upper openings each of which communicates with only one of said lower discharge openings, each of which upper openings is adapted to be positioned so it is at a fixed predetermined lateral location relative to said upper furnace portion when its associated lower discharge opening is aligned in close proximity to the mouth of the selected port means into which it is to discharge; and in which said means for depositing charge material into the upper opening of said chute discharges charge material into an upper opening when it is at said fixed predetermined location.

12. The apparatus of claim **11** in which said last mentioned means includes a hopper above said chute having a discharge opening at said fixed predetermined lateral location.

13. The apparatus of claim **11** in which there are two of said chutes each adapted to discharge material into predetermined ones of said plurality of port means.

14. Apparatus for charging particulate charge material into a shaft furnace comprising an upper furnace portion having a generally vertical axis; a non-rotatable bell hopper having an open bottom and a closed top wall; a bell adapted to open and close said bottom of said hopper; a plurality of port means located around said axis and mounted on the top wall of said bell hopper, each of said port means having an upwardly open mouth; valve means for closing each of said port means in gas sealing relation and for opening each of said port means independently of other port means; a pair of chutes mounted above said port means, one of each side of said axis, for reciprocating movement in a straight lateral path, the paths of movement of said chutes being generally parallel, each of said chutes having a plurality of lower discharge openings each of which communicates with its own upper opening in said chute, said lower openings being arranged so that each can be located over the mouth of a predetermined port means at one side of said axis and said upper open-

ings being located so that when a lower opening is over its predetermined port means the upper opening in communication with it is at a fixed predetermined location at which it can receive charge material, each of said lower discharge openings being adapted to be aligned in close proximity to the mouth of its predetermined port means so that charge material introduced into the upper opening in communication with the lower opening will pass from said chute into said furnace when said port means is open, and means for depositing material into each upper opening of said chute when it is in said predetermined location.

15. Apparatus according to claim **14** comprising a fixed hopper above said chute adapted to discharge material from said hopper into an upper opening of said chute at said predetermined location; and means for depositing charge material into said hopper.

16. The apparatus of claim **14** in which said means for discharging material into said chute comprises skip car means.

17. The apparatus of claim **14** in which said means for discharging material into said chute comprises conveyor means.

18. The apparatus of claim **14** in which the lower portion of each of said chutes includes a plurality of inclined chute portions each having a lower discharge opening.

19. The apparatus of claim **14** in which said port means are at least four in number and equidistantly and equiangularly spaced around said axis, and each of said chutes is adapted to discharge charge material into half the number of said port means.

20. The apparatus of claim **18** in which there are six port means, and each of said chutes has three lower discharge openings and three upper openings.

21. The apparatus of claim **14** comprising nonrotatable hopper means above said chutes having a discharge opening at said fixed predetermined location to discharge charge material into an upper opening of said chute when it is at said fixed predetermined location and means for depositing charge material into said hopper.

22. The apparatus of claim **14,** comprising a nonrotatable bell hopper below said first mentioned bell hopper and having an open bottom; and a bell adapted to open and close said bottom of said hopper.

23. Apparatus for charging particulate charge material into a shaft furnace comprising an upper furnace portion having a top wall; a plurality of port means laterally spaced on said top wall, each of said port means having an upwardly open mouth; valve means for closing each of said port means in gas sealing relation and for opening each of said port means independently of other port means so that when said valve means is open charge material can flow into the mouth of the port means and through the port means into said furnace; a plurality of chutes mounted above said port means, each of said chutes being supported and driven in a lateral path independently of any other chute and having essentially its entire lower portion thereof located externally of any hopper adapted to contain charge material, each of said chutes having a plurality of lower discharge openings adapted to be moved laterally over the mouths of predetermined ones of said port means, each of said lower discharge openings being adapted to be aligned in close proximity to the mouth of a selected port means so that charge material can pass from said chute discharge opening into said furnace when said port means is open, said chute having an open top portion adapted to receive charge material deposited therein that can be discharged through said lower discharge openings.

24. The apparatus of claim **22** in which each of said chutes has a plurality of upper openings each of which communicates with only one of said lower discharge openings, and each of which upper openings is adapted to be positioned so it is at a fixed predetermined lateral location relative to said upper furnace portion when its associated lower discharge opening is aligned in close proximity to the mouth of the selected port means into which it is to discharge; and means for discharging charge material into said upper opening when it is at said fixed predetermined location.

25. The apparatus of claim **23** in which said furnace has a vertical axis, and in which said chutes comprise a pair of chutes mounted above said port means one on each side of said axis, each of said chutes being adapted to discharge charge material into at least one port means into which charge material cannot be discharged from the other chute.

26. Apparatus for charging particulate charge material into a furnace comprising an upper furnace portion having a top wall; a plurality of port means laterally spaced on said top wall, each of said port means having an upwardly open mouth; valve means for closing each of said port means in gas sealing relation and for opening each of said port means independently of other port means so that when said valve means is open, charge material can flow into the mouth of the port means and through the port means into said furnace; a chute mounted above said furnace for reciprocatory movement in a lateral path, said chute having a permanently open lower discharge opening adapted to be laterally moved into close proximity to the mouth of a selected port means so that charge material can pass from said chute into said furnace when said port means is open, said chute having an upper opening adapted to receive charge material disposed therein that is discharged through said lower opening, said chute being supported and having essentially its entire lower portion located externally of any hopper adapted to contain charge material; and means for depositing charge material into the upper opening of said chute only when its lower discharge opening associated with said upper opening is in close proximity to the mouth of a selected port means so that charge material can pass from said chute into said furnace when said port means is open.

27. The apparatus of claim **26** comprising a plurality of chutes, each mounted for reciprocatory movement in an independent lateral path, each of said chutes being adapted to discharge charge material into at least one port means into which material cannot be discharged from the other chute.

* * * * *