Aug. 9, 1932. J. N. WHITE 1,871,103

NOZZLE

Filed Aug. 27, 1928

Fig. 1.

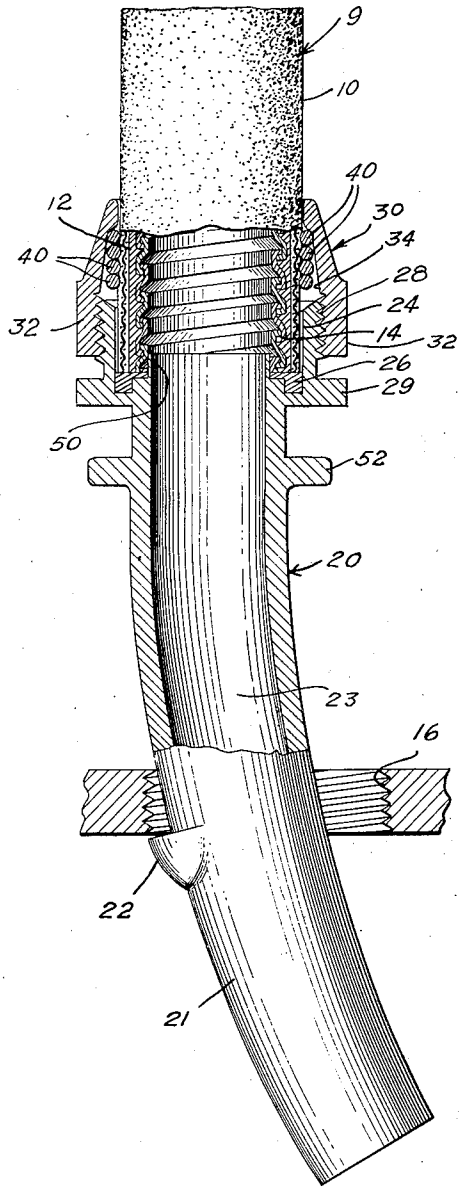

Fig. 2.

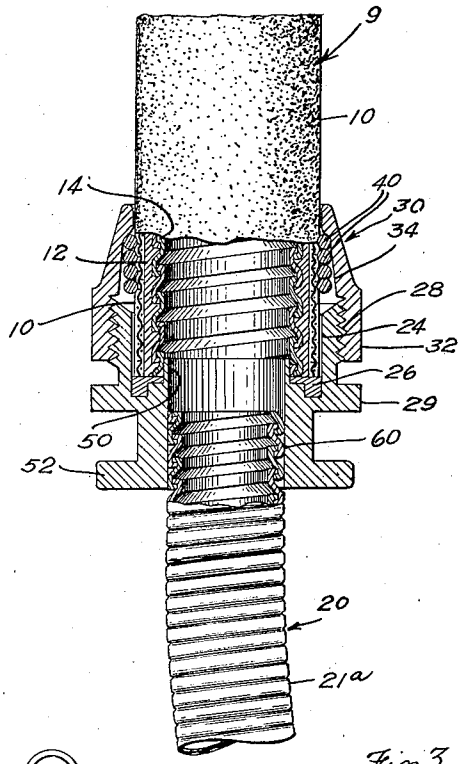

Fig. 3.

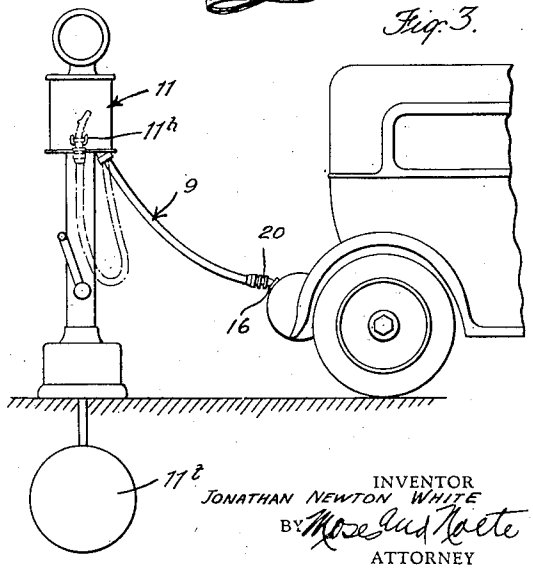

INVENTOR
JONATHAN NEWTON WHITE
BY Moses and Noete
ATTORNEY

Patented Aug. 9, 1932 1,871,103

UNITED STATES PATENT OFFICE

JONATHAN NEWTON WHITE, OF NEW YORK, N. Y., ASSIGNOR TO UNITED METAL HOSE CO. INC., OF NEW YORK, N. Y., A CORPORATION OF NEW YORK

NOZZLE

Application filed August 27, 1928. Serial No. 302,155.

This invention relates to nozzles and metal lined hose of the type used to dispense inflammable liquids, and most particularly gasoline from fuel stations and filling devices to automobile tanks.

An object of this invention lies in the provision of a simple strong structure which will positively engage the hose end and form a nozzle therefor without intermediary fittings or parts and will when engaged with such hose form, for all practical purposes, a unitary part thereof and remove any likelihood of accidental detachment in service so that this nozzle may serve as a hanger for the hose and any possible leakage with its attendant danger of fire and damage to the exterior of the automobile will be removed.

In the dispensing of inflammable fluids, and more especially of oils such as gasoline, it is desirable to utilize materials other than those readily destroyed by such fluids. It has been found however that a very considerable fire hazard from frictionally generated electricity often followed upon the use of such materials and particularly upon the use of metals or metallic parts when the same were used with other parts of insulating character;—various makeshifts, grounding chains, wire clips and the like, have been tried but have failed in that seldom if ever were all of the metal parts always in direct electrical contact so that no potential difference could exist therebetween. It is the purpose of the herein disclosed invention to automatically provide direct contact between, and grounding of, the metallic hose and nozzle and the tank or other container into which discharge is made without other media than the parts themselves and without other operation than that involved by the usual use of the said parts for fluid discharge.

It is also a function of the herein disclosed invention to provide means for protecting non-metallic parts of the hose from exposure to the destroying action of the fluids conveyed and to provide such means in a form permitting use of rubber and like materials where such are best suited and for the complete isolation of such materials from the fluids handled.

Reference to the following description, the attached drawing, and the appended claims will serve to further disclose the above, and certain other improvements and objects accomplished by this invention.

Figure 1 is a side elevation of an embodiment of my invention, a portion only of the hose being shown and the main part of the structure being broken away substantially on its center line to facilitate description.

Figure 2 shows a modification of the embodiment of Fig. 1 and is taken in substantially the same fashion as that figure.

Figure 3 serves to illustrate a hose embodying my invention in actual use.

A preferred form of metallic hose 9 utilized for the purposes described consists of a woven fabric outer cover 10, a rubber layer 12, and a metal lining 14. This hose, in one of its most common uses, extends from the gasoline dispensing pump to the automobile tank to be filled and into whose filling opening 16 the gasoline is to be discharged. It will be understood that the openings 16 in different automobiles are located in various positions and vary in size and shape so that an elongated discharge portion 21 of the hose nozzle 20 is customarily provided for convenience in inserting the nozzle in the tank opening and that a holding lug 22 serves to assist in holding the nozzle in position in the tank opening. The pump end of the hose 9 is preferably united to the gasoline pump 11 in such fashion that metallic lining 14 forms a continuous extension of the metal parts thereof (which are thoroughly grounded through tank 11*t*) and it is one of the important features of this invention that the novel form of nozzle now disclosed permits a further metallic extension of the said completely grounded parts and for the completion of an all metal conduit and connection to the tank opening 16 and the metal parts of the car, preventing contamination of the gasoline, destruction of the rubber and fabric portions of the hose, and any electrical potential difference capable of producing a spark between the parts.

The nozzle 20 has a discharge bore 23 extending therethrough and surrounded at the

hose end by a recess 24 slightly larger than the hose 9 whose end extends into this recess and abuts against a suitable shoulder or gasket 26 at the inner end of the recess. The body of nozzle 20 is enlarged to accomodate recess 24 and upon this enlarged portion I prefer to provide a thread or equivalent engagement device 28 and a convenient holding flange 29 which may be six or eight sided to accomodate a wrench, if desired. Thread 28 serves for the engagement of sleeve 30 which is internally threaded, as indicated, so that it may be drawn and tightened upon the nozzle body, a wrench application portion 32, somewhat similar to flange 29, providing for positive engagement between the parts. Sleeve 30 is internally recessed at 34 to accommodate a helical compression member 40 (see also Fig. 3) which engages the outer surface of the hose 9 and which (when the sleeve 30 is tightened on the body 20) is compressed thereon and securely clamps the hose while at the same time permitting the movement of sleeve 30, as it draws upon the body 20, to force the end of hose 9 tightly against shoulder or gasket 26 and to tightly seal the end of the hose to the nozzle body.

The positive seal between the metallic lining 14 of the hose 9 and the body of nozzle 20 is further aided, while an electrical contact is automatically and securely effected, by a projection or flange 50 upon body 20 entering and engaging the metal lining 14 and uniting it with the metal of body 20 so that the two are mechanically and electrically a single unit when so joined. This construction will be seen to completely eliminate intermediary fittings and then unavoidable packed joints, thus substantially reducing the liability to leakage or failure while reducing the cost of construction and increasing the strength and usefulness of the structure as a whole.

It will be understood that utilization of the means above set forth so applies the nozzle to the hose that accidental separation therebetween is almost an impossibility, compression member 40 gripping the hose more tightly as pull between the two increases. Thus it is entirely practical to place a hanger 52 upon the exterior of nozzle 20 and for such hanger to replace any form of hanger formerly needed on the hose itself thus effecting an added function and a substantial improvement over direct hanger contact with the outer hose cover 10 and its consequent early destruction. Hanger 52 is here shown as in the form of a flange adapted to be placed within the forks of a suitable holder 11—*h* secured to the gasoline pump (see dotted lines Fig. 3 for the hose in hung up position) or like convenient support, but it will be understood that a hook or like hanger may be equally well incorporated in the nozzle structure when desired.

Figure 2 serves to illustrate that embodiment of my invention wherein the rigid elongated portion 21 of the nozzle is replaced by a suitable flexible portion 21*a* which is also positively mechanically and electrically joined with the nozzle body at 60 and which may extend to such length and direction as desired and thereby facilitating nozzle application in many instances.

The flexible portion 21*a* will be seen to in no way prevent useful applying of all of the means hereinbefore described and it will be noted that the uniting and protective functions are fully performed as in the preceding embodiment like numerals having been applied to like parts in the drawing.

While I have described my device as particularly suited for the dispensing of gasoline and like inflammable fluids it will be manifest that many other uses are possible and while certain embodiments have been set forth as preferable it will be understood that many modifications in the whole and in the parts thereof are well within the scope of my invention and the spirit of the appended claims.

I claim:

1. In a nozzle for metal lined hose, a nozzle body having an elongated discharge portion, and a hose clamp engagement portion, a clamp for said hose provided with means for engaging the said clamp engagement portion on said body, and a compression member surrounding the hose and within the said clamp, said nozzle body also having a portion providing an extension for the metallic lining of said hose, said portion effecting contact with said lining when the said compression and clamp members are applied.

2. In a nozzle and grounding device for metal lined hose, a metallic body portion having part of a compression coupling integral therewith and a hose lining contact within said coupling part, a compression member fitting over the hose to abut against that end of the said body portion having the compression coupling part thereon, and a further compression coupling part sliding over the hose and the said compression member to engage the compression coupling part on the body portion to clamp the said member on the exterior of the hose to hold the same and to force the hose lining against the hose lining contact upon said body portion whereby the said body becomes mechanically and electrically the continuation of the hose and serves to ground and discharge the same.

3. In a pipe nozzle, a longitudinally bored body portion having a pipe reception recess, a threaded portion surrounding that part of said body having the pipe reception recess therein, a circumferential hanger groove above said threaded portion and an elongated discharge portion, said body por-

tion in combination with a helical compression member normally of greater diameter than said pipe recess and adapted to slide over the exterior of a pipe placed therein and to abut against the end of said threaded portion of the body, and a sleeve longitudinally bored to slide over the pipe, internally recessed to fit over said compression member and provided with a threaded portion to engage the threaded portion of said body and by engagement therewith to compress said compression member and hold the pipe within said body recess whereby discharge from said pipe will be through the longitudinal bore of said body and said hanger serves to hang the pipe and nozzle.

In testimony whereof I have affixed my signature to this specification.

JONATHAN NEWTON WHITE.