US 20140219824A1

(19) **United States**

(12) **Patent Application Publication**

Burnette

(10) **Pub. No.: US 2014/0219824 A1**

(43) **Pub. Date: Aug. 7, 2014**

(54) **PUMP SYSTEM AND METHOD THEREOF**

(71) Applicant: **Blake Burnette**, Tomball, TX (US)

(72) Inventor: **Blake Burnette**, Tomball, TX (US)

(73) Assignee: **Baker Hughes Incorporated**, Houston, TX (US)

(21) Appl. No.: **13/760,340**

(22) Filed: **Feb. 6, 2013**

Publication Classification

(51) **Int. Cl.**

F04B 9/04	(2006.01)
F04B 23/06	(2006.01)
F04B 47/00	(2006.01)

(52) **U.S. Cl.**

CPC ***F04B 9/042*** (2013.01); ***F04B 47/00*** (2013.01); ***F04B 23/06*** (2013.01)

USPC **417/53**; 417/343; 417/234

(57) **ABSTRACT**

A pump system includes a plurality of pump assemblies. Each pump assembly having a power assembly and a fluid assembly. Each power assembly of each pump assembly includes a crankshaft, an input connection, and an output connection. The input connection of one pump assembly among the plurality of pump assemblies connected to the output connection of one pump assembly among the plurality of pump assemblies; at least one lead pump assembly within the plurality of pump assemblies configured to be connected to a prime mover commonly driving the plurality of pump assemblies. Also included is a method of pumping pressurized fluid to a site.

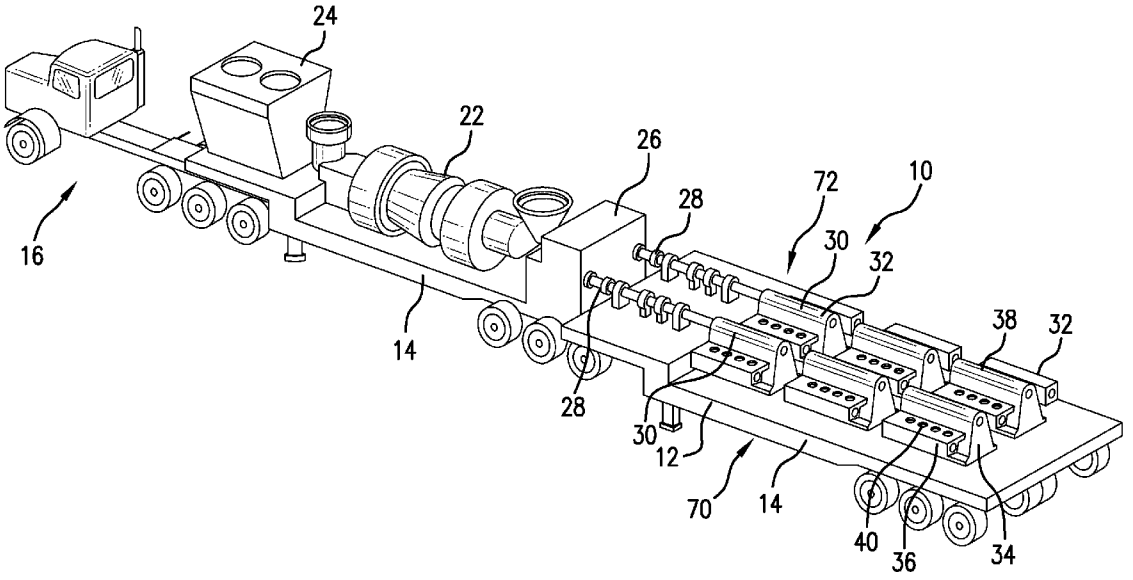

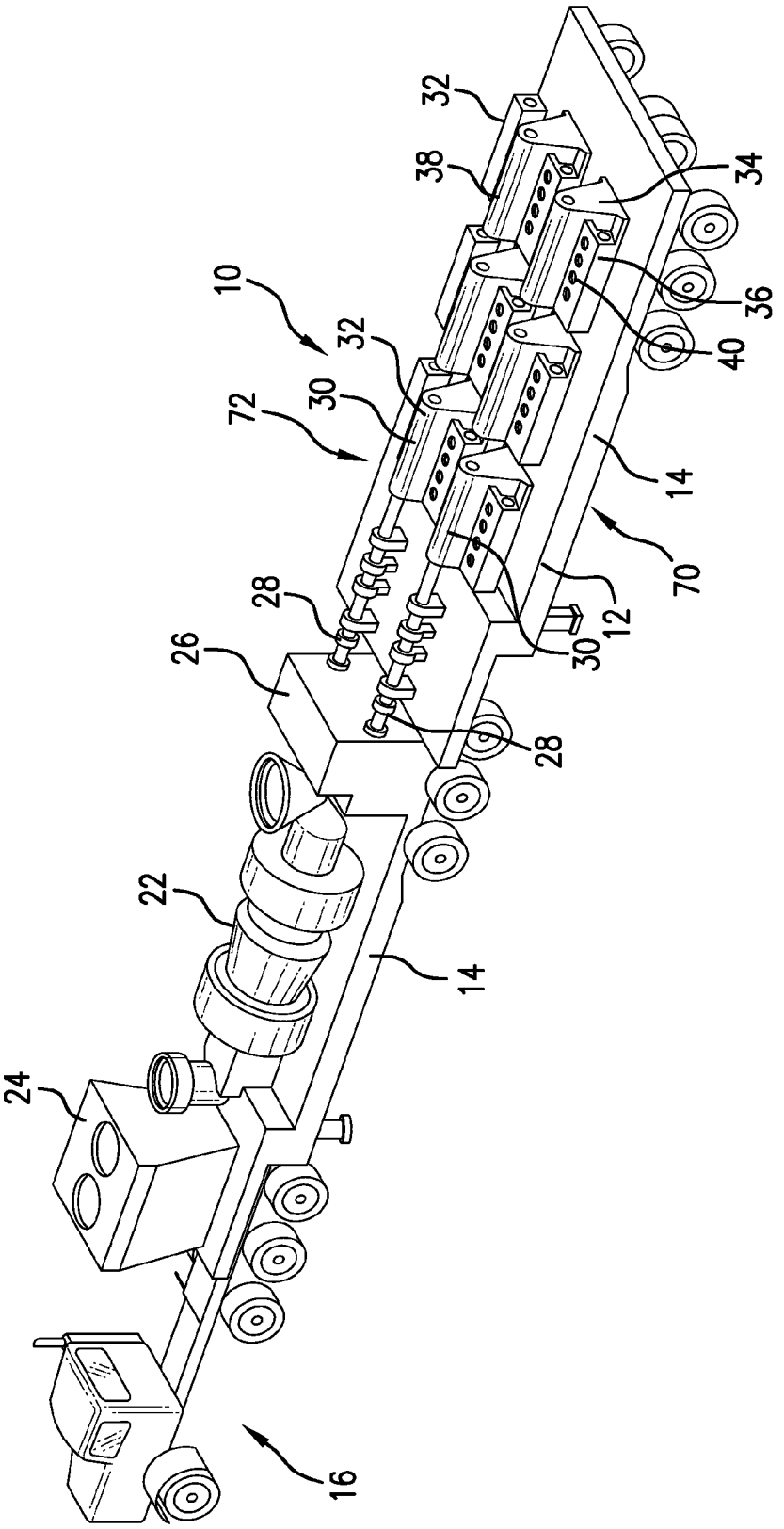

FIG. 1

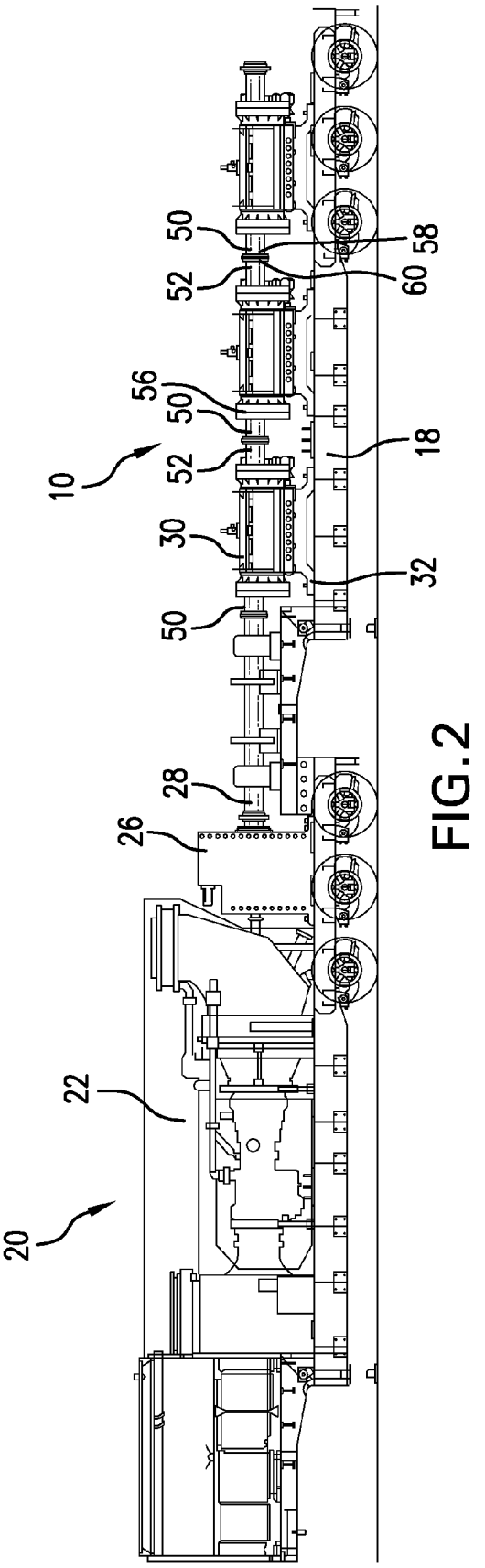

FIG. 2

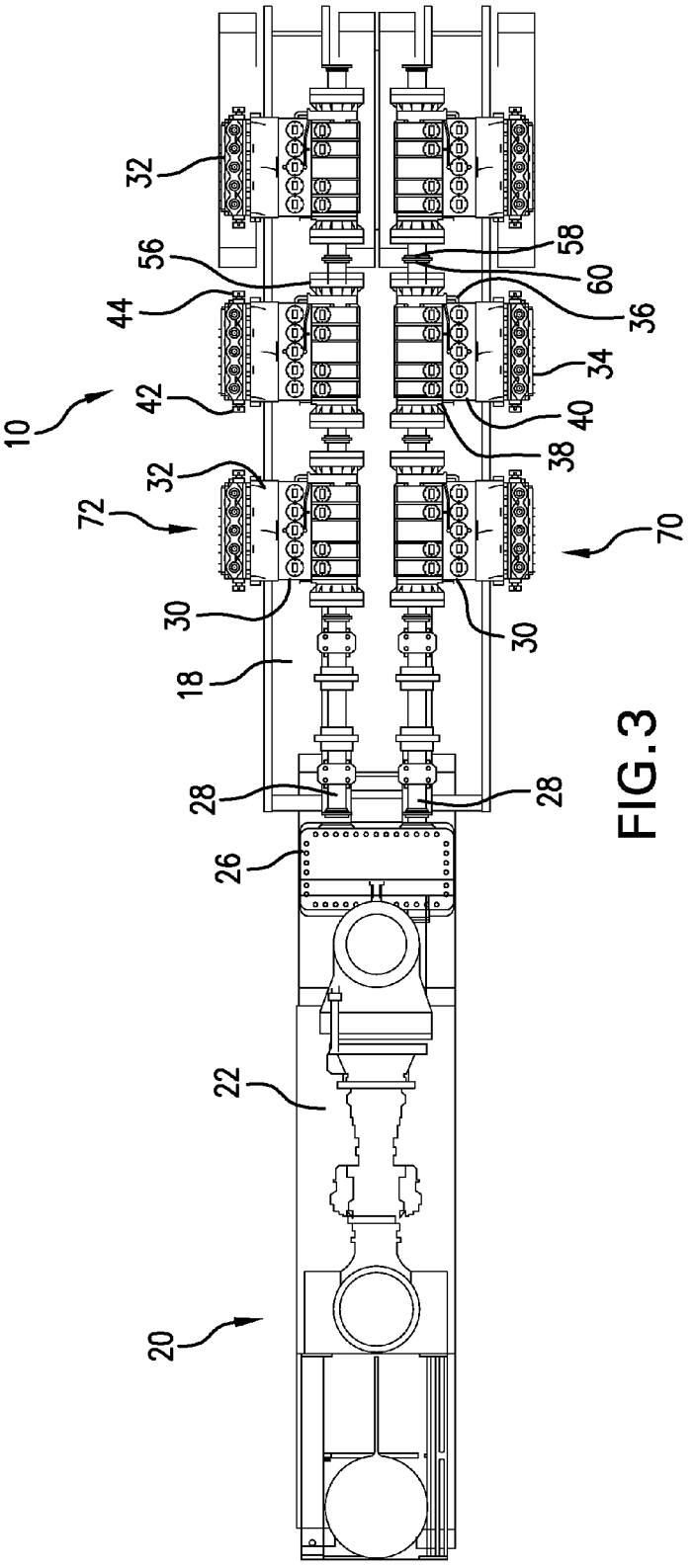

FIG. 3

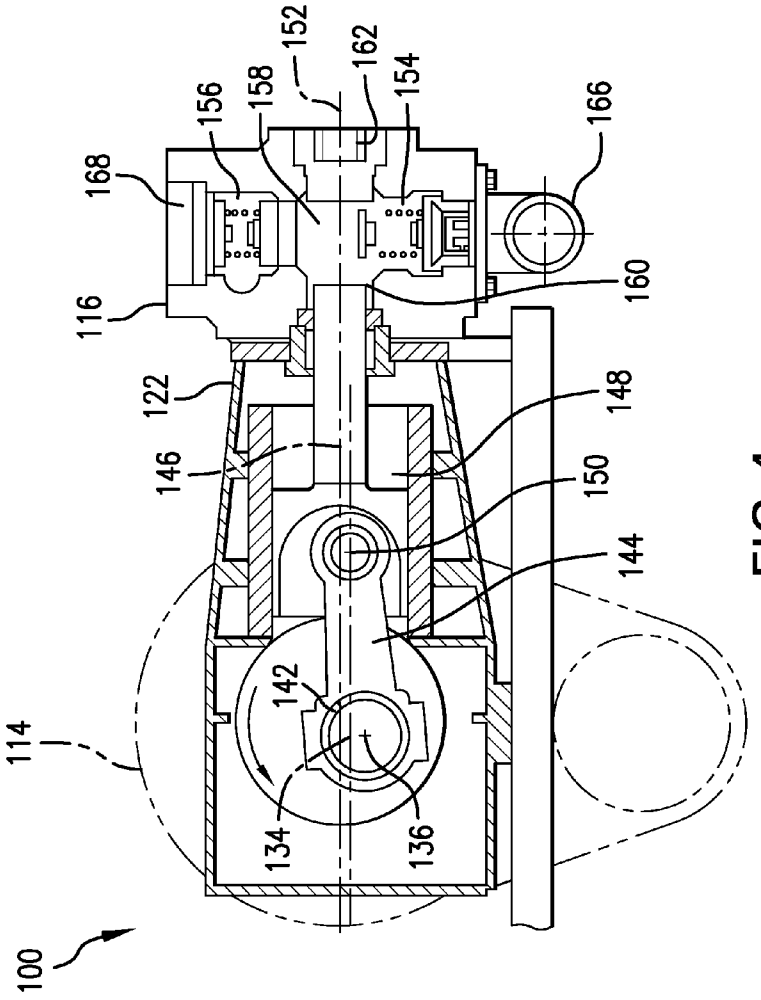

FIG.4
(Prior Art)

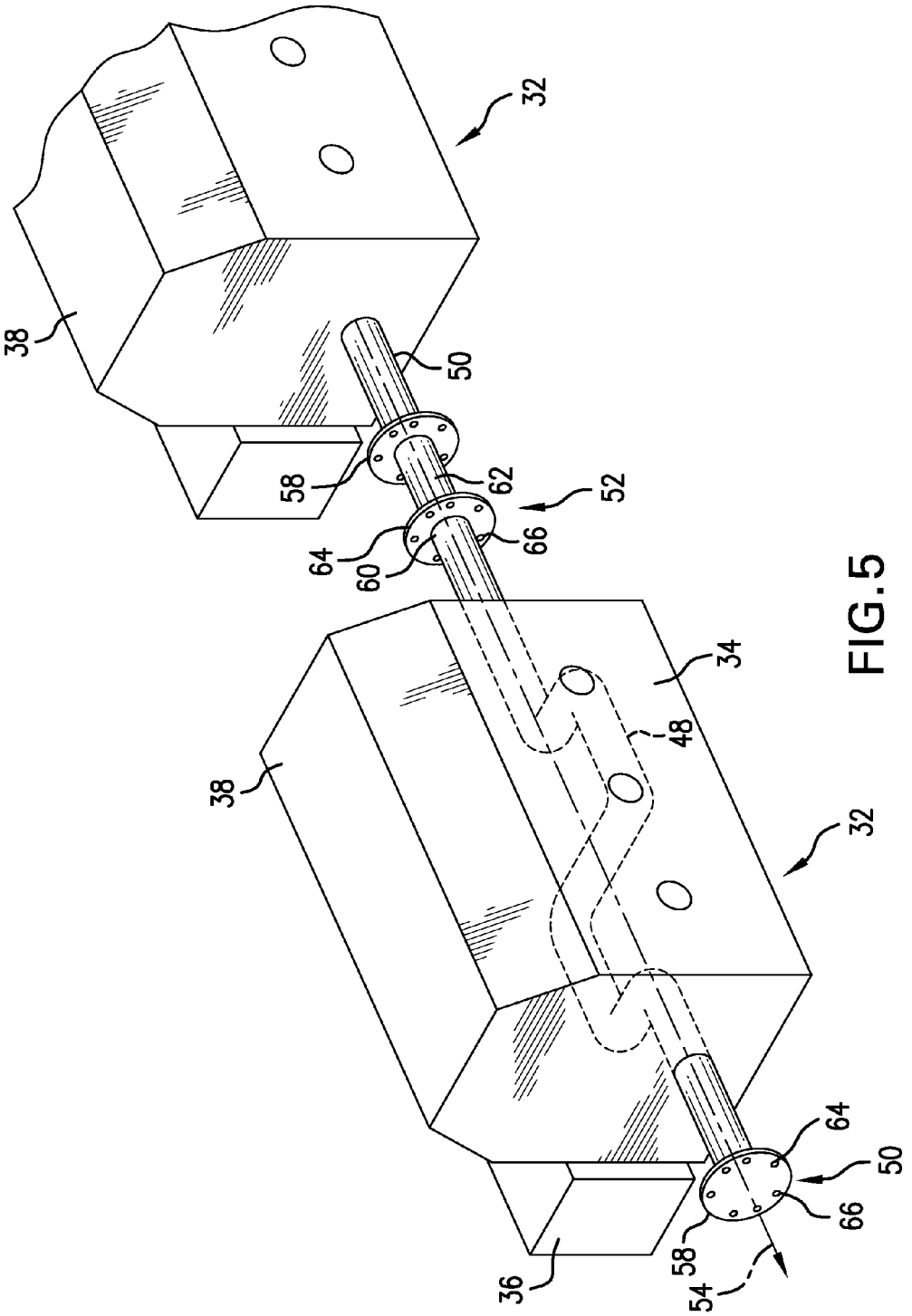

FIG. 5

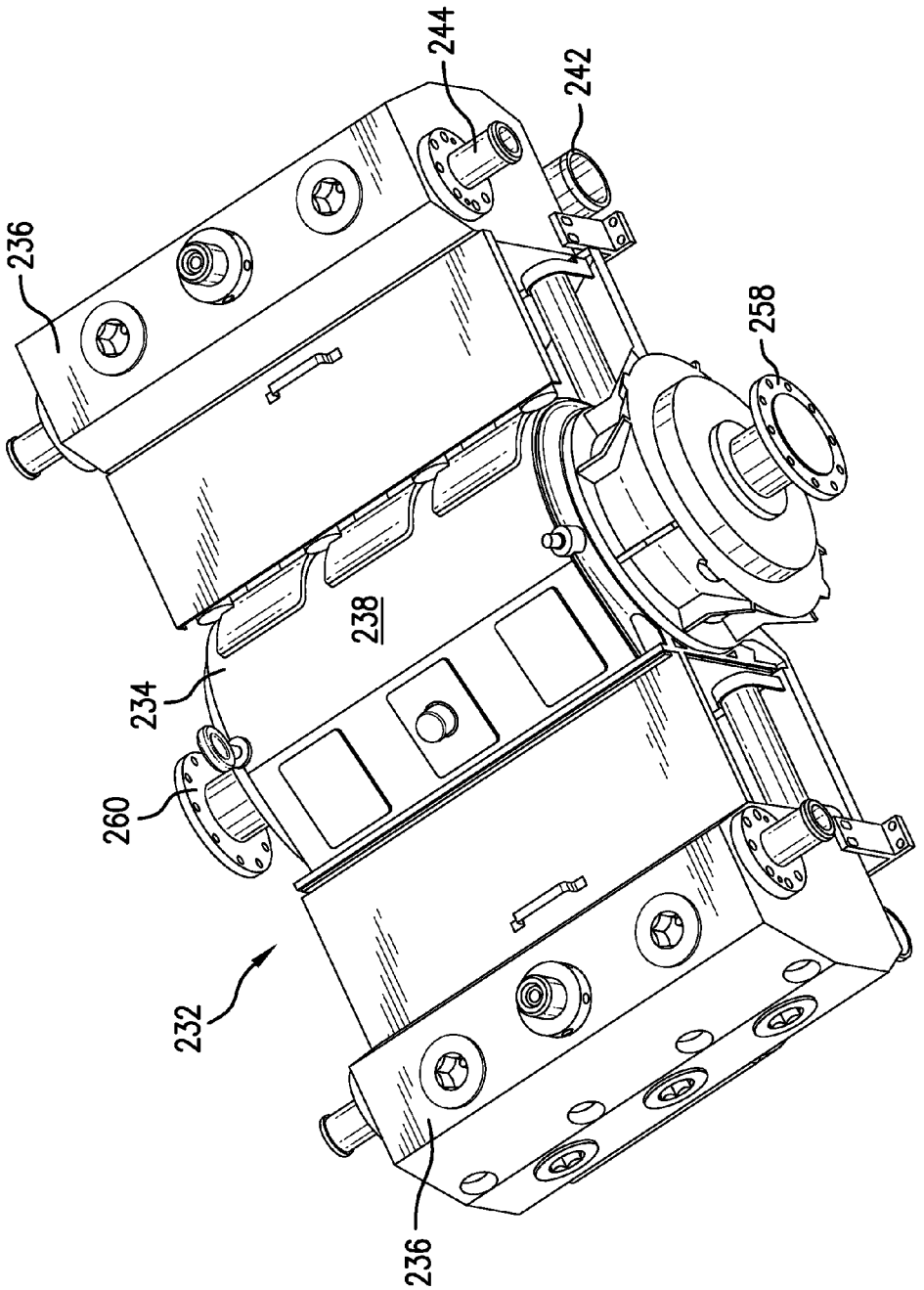

FIG.6

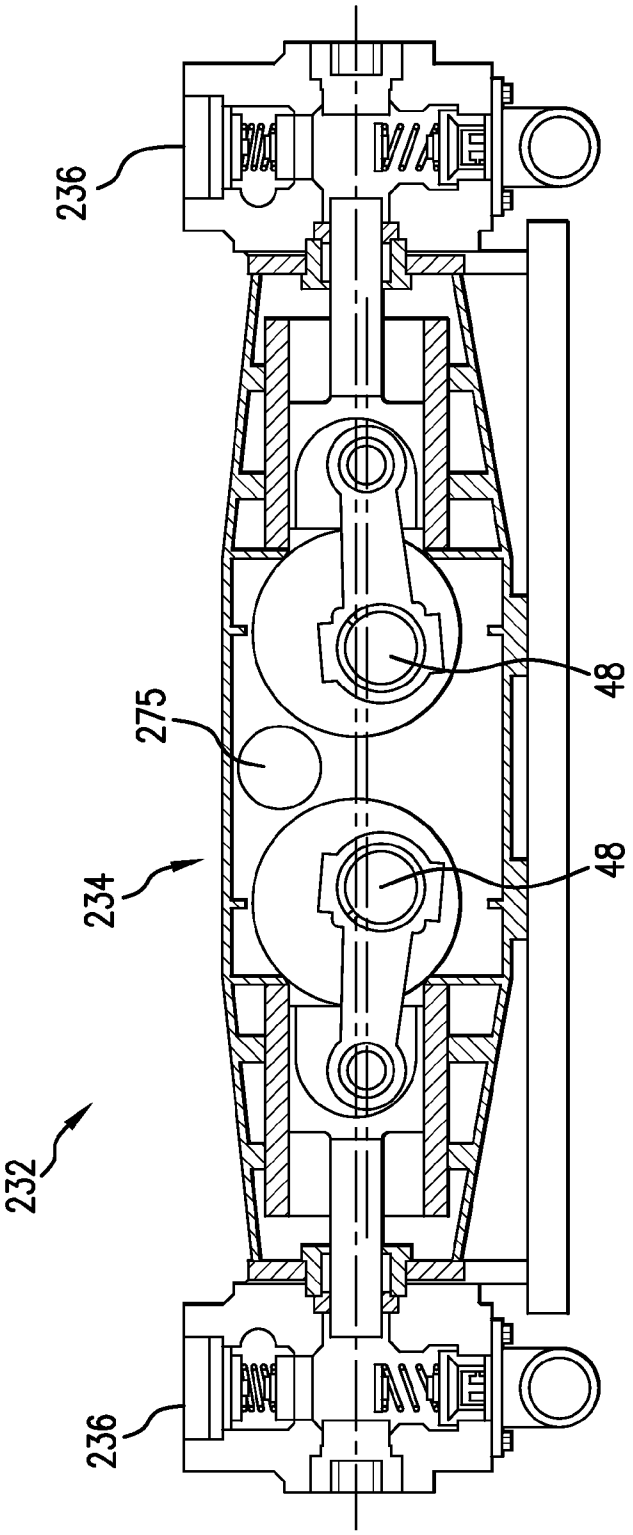

FIG. 7

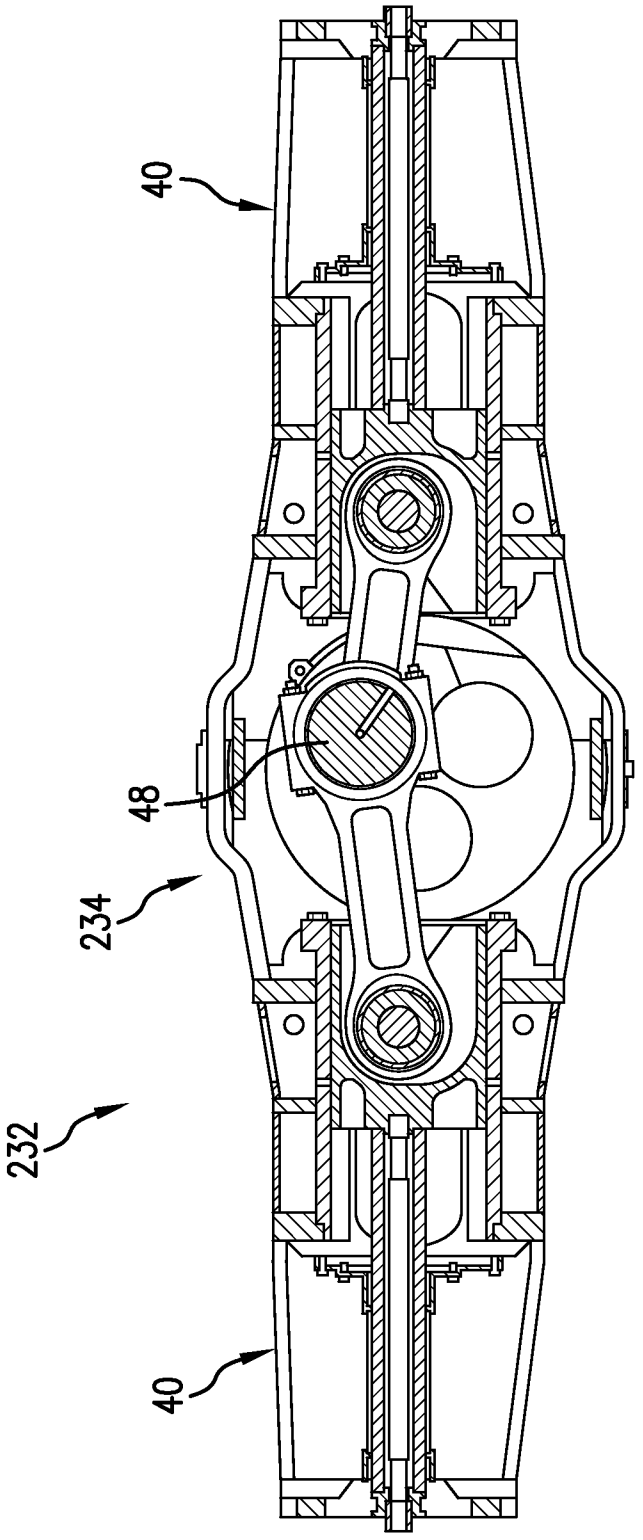

FIG.8

PUMP SYSTEM AND METHOD THEREOF

BACKGROUND

[0001] In the drilling and completion industry, the formation of boreholes for the purpose of production or injection of fluid is common The boreholes are used for exploration or extraction of natural resources such as hydrocarbons, oil, gas, water, and alternatively for CO2 sequestration. To increase the production from a borehole, the production zone can be fractured to allow the formation fluids to flow more freely from the formation to the borehole. The fracturing operation includes pumping fluids at high pressure towards the formation to form formation fractures. To retain the fractures in an open condition after fracturing pressure is removed, the fractures must be physically propped open, and therefore the fracturing fluids commonly include solid granular materials, such as sand, generally referred to as proppants. Other components of the fracturing fluids typically include water, gel, or other chemical additives.

[0002] The pressure required for hydraulic fracturing of a formation, for example, often requires fracturing fluid to be pumped at pressures of 10,000 to 15,000 psi in order to create a fracture in the formation. To pump the fracturing fluids at the high pressures required for fracturing, crankshaft driven positive displacement pumps are used. The crankshaft driven positive displacement pumps include a fluid end and a power end. The fluid end includes a number of plungers driven by a crankshaft toward and away from a chamber in order to affect a high or low pressure on the chamber. The fluid end receives relatively low pressure fluid, and pressurizes the fluid to provide higher pressurized fracturing fluid at the required pressure for fracturing within the borehole. The power end includes or is attached to a pump powering mechanism also known as a prime mover, commonly an electric motor, which connects to the crankshaft or a pinion shaft to drive the power end.

[0003] The art would be receptive to improved apparatus and methods for hydraulic fluid fracturing pumps.

BRIEF DESCRIPTION

[0004] A pump system including a plurality of pump assemblies, each pump assembly having a power assembly and a fluid assembly, each power assembly of each pump assembly including a crankshaft, an input connection, and an output connection, the input connection of one pump assembly among the plurality of pump assemblies connected to the output connection of one pump assembly among the plurality of pump assemblies; at least one lead pump assembly within the plurality of pump assemblies configured to be connected to a prime mover commonly driving the plurality of pump assemblies.

[0005] A method of pumping pressurized fluid to a site, the method including selecting a prime mover; selecting a number of pump assemblies, each pump assembly having a power assembly and a fluid assembly, each power assembly including a crankshaft, an input connection, and an output connection; arranging the pump assemblies on a surface; connecting the input connection of each pump to an output connection of an adjacent upstream pump; and, connecting at least one lead pump to the prime mover to commonly drive the plurality of pumps.

BRIEF DESCRIPTION OF THE DRAWINGS

[0006] The following descriptions should not be considered limiting in any way. With reference to the accompanying drawings, like elements are numbered alike:

[0007] FIG. **1** shows a perspective view of an exemplary embodiment of a pump system mounted on a trailer bed of a truck;

[0008] FIG. **2** shows a side view of an exemplary embodiment of a pump system mounted on a flatbed of a train;

[0009] FIG. **3** shows a top view of the exemplary pump system of FIG. **2**;

[0010] FIG. **4** shows a cross-sectional view of a pump assembly according to the prior art;

[0011] FIG. **5** shows a perspective view of two adjacent exemplary pump assemblies usable in the exemplary pump system of FIGS. **1-3**;

[0012] FIG. **6** shows a perspective view of another exemplary embodiment of a pump assembly usable in the exemplary pump system of FIGS. **1-3**;

[0013] FIG. **7** shows a cross-sectional view of an exemplary embodiment of a reciprocating pump assembly having two fluid assemblies; and,

[0014] FIG. **8** shows a cross-sectional view of another exemplary embodiment of a reciprocating pump assembly having two fluid assemblies.

DETAILED DESCRIPTION

[0015] A detailed description of one or more embodiments of the disclosed apparatus and method are presented herein by way of exemplification and not limitation with reference to the Figures.

[0016] With reference to FIG. **1**, a pump system **10** is shown mounted on a platform **12**, such as at least one trailer bed **14** of a truck **16** for portability. In the illustrated embodiment, two linked trailer beds **14** are employed that are pulled by the truck **16**. As shown in FIGS. **2-3**, the pump system **10** is alternatively illustrated as mounted upon a flatbed **18** of a train **20** and pulled by a train **20**. While FIGS. **1-3** advantageously illustrate a portable pump system **10**, it would be within the scope of these embodiments to also provide the pump system **10** on any type of mounting surface or platform **12** including other surfaces designed for portability as well as those designed as a permanent or semi-permanent fixtures.

[0017] The pump system **10** further includes or utilizes a prime mover **22**, and is particularly designed to take advantage of higher HP prime movers **22**. The prime mover **22** could be an electric motor such as a super conducting electric motor or an internal combustion engine such as a turbine engine, or diesel engine, although other prime movers **22** are within the scope of these embodiments. The illustrated prime mover **22** of FIG. **1** is a turbine engine. A radiator **24** is additionally provided for cooling. A gear box **26** is positioned between the prime mover **22** and the remainder of the pump system **10**. At least one output shaft **28** extends from the gear box **26** and connects a lead pump assembly **30** of the pump system **10** to the prime mover **22** via the gear box **26**. In the illustrated embodiments, two output shafts **28** extend from the gear box **26**, although the gear box **26** is not limited to one or two outputs and may alternatively include additional outputs.

[0018] Enabled by the output or power rating of the high horsepower prime mover **22**, the pump system **10** includes a plurality of pump assemblies **32**, at least two of which are

arranged end-to-end using connections as will be further described below. Each pump assembly **32** is a positive displacement pump, in particular a reciprocating pump assembly **32** as shown. The pump assembly **32** is usable for a fracturing application in which fracturing fluid, such as, but not limited to a proppant filled slurry, is pumped downhole into a borehole for creating and potentially propping fractures in a formation. While particularly suited for a fracturing application, the pump system **10** may be employed in other applications. Each pump assembly **32** includes a power assembly **34**, sometimes referred to as a power end, and a fluid assembly **36**, sometimes referred to as a fluid end. The power assembly **34** includes a crankshaft housing **38** which houses a crankshaft as will be further described below. A crosshead assembly **40** is interposed between the power assembly **34** and the fluid assembly **36**. The crosshead assembly **40** converts rotational movement within the power assembly **34** into reciprocating movement to actuate internal pistons or plungers of the fluid assembly **36**. While the illustrated pump assemblies **32** include five internal pistons to pump the fluid in the fluid assemblies **36**, an alternate number of pistons may be provided in each pump assembly **32**, or alternatively an alternate number or pistons in different pump assemblies **32**.

[0019] With reference to FIG. **3**, the fluid assembly **36** includes an input valve connected to an inlet **42** and an output valve connected to an outlet **44**. The inlets **42** of the pump assemblies **32** are connected to a source of fluid, such as a proppant filled slurry. The outlets **44** of the pump assemblies **32** may be connected to hoses, piping or the like to direct pressurized fluid to a borehole. Withdrawal of a piston during a suction stroke pulls fluid into the fluid assembly **36** through the input valve that is connected to the inlet **42**. Subsequently pushed during a power stroke, the piston then forces the fluid under pressure out through the output valve connected to the outlet **44**.

[0020] An exemplary embodiment of the internal mechanics of a reciprocating pump assembly **100** is shown in FIG. **4**. The power assembly **114** includes a crankshaft **134** rotatable about a longitudinal axis **136**. The crankshaft **134** includes a plurality of eccentrically arranged crankpins **142** (or alternatively a plurality of eccentric sheaves), and a connecting rod **144** is connected to each crankpin **142**. The connecting rods **144** connect the crankpins **142** to the pistons **146** via the crosshead assembly **122**. The connecting rods **144** are connected to a crosshead **148** using a wrist pin **150** that allows the connecting rods **144** to pivot with respect to the crosshead **148**, which in turn is connected to the pistons **146**. The longitudinal axis **152** of each of the pistons **146** is perpendicular to the longitudinal axis (rotational axis) **136** of the crankshaft **134**. When the crankshaft **134** turns, the crankpins **142** reciprocate the connecting rods **144**. Moved by the connecting rods **144**, the crosshead **148** reciprocates inside fixed cylinders. In turn, the pistons **146** coupled to the crosshead **148** also reciprocate between suction and power strokes in the fluid assembly **116**. Input valves **154** are connected to the inlet **126** and output valves **156** are connected to the outlet. The fluid assembly **116** includes vertical passages **158** for passing fluid from each of the input valves **154** to respective output valves **156**. The fluid assembly **116** also includes horizontal passages **160** that are directed along the longitudinal axis **152** of the pistons **146**. The horizontal passages **160** are in fluid communication with the vertical passages **158**. Withdrawal of a piston **146** during a suction stroke pulls fluid into the fluid assembly **116** through an input valve **154** that is connected to an inlet **166**. Subsequently pushed during a power stroke, a piston **146** then forces the fluid under pressure out through the output valve **156** connected to an outlet **168**. Pressure relief valves **162** are further included at a location opposite the pistons **146**, at an end of the horizontal passages **160** of the fluid assembly **116**, and are employed if a predetermined pressure threshold is reached within the first horizontal passages **160**.

[0021] The pump assemblies **32** may operate in a similar fashion to the pump assembly **100**, except that the crankshafts **48** of adjacent pump assemblies **32** are interconnected as described herein. With reference to FIGS. **1-3**, and further reference to FIG. **5**, the prime mover **22** drives the pump assemblies **32** via the gear box **26**, output shaft(s) **28**, and input flanges **50** of the pump assemblies **32**. If the pump assemblies **32** are not directly connected to the output shaft **28** of the gear box **26** (that is, if the pump assembly **32** is not a lead pump assembly **30**), then the input flange **50** of a downline pump assembly **32** is driven by the output shaft **52** of an upstream adjacent pump assembly **32**. The crankshaft **48** can be rotated directly by an input end of the crankshaft **48**. Alternatively, the pump assembly **32** can include a pinion shaft (not shown) that engages with the crankshaft **48**, and the pinion shaft is rotatable by the prime mover **22** which in turn moves the crankshaft **48**. The output shaft **52** may be centered in-line with a rotational axis **54** of the crank shaft **48**, may be a portion of the crank shaft **48** that extends exteriorly of the crankshaft housing **38**, may be centered in line with a rotational axis of a pinion shaft (not shown) that rotates the crankshaft, or alternatively the output shaft **52** may be otherwise offset from the crankshaft **48**. The output shaft can come off the back of the power assembly **34** as shown in FIG. **5**, or can come out of a planetary gear box **56** on the pump assembly **32** as shown in FIGS. **2** and **3**. In any of the above-described exemplary embodiments, the prime mover **22** is employed to rotate the crankshaft **48** within the crankshaft housing **38** of each respective pump assembly **32**.

[0022] To connect one pump assembly **32** to an adjacent pump assembly **32**, input connections **58** and output connections **60** are employed that are either directly connected to each other as shown in FIGS. **2-3** or connectable by a linking rod **62** as shown in FIG. **5**. In an exemplary embodiment, the input connection **58** may be substantially identical to the output connection **60** except that the input connection **58** is attached to the input flange **50** and the output connection **60** is attached to the output shaft **52**. In the illustrated embodiment, the input and output connections **58**, **60** include plates **64** fixedly connected to the input flange **50** and output shaft **52**. If connected by a linking rod **62**, the linking rod **62** may also include the plates **64**. The plates **64** are illustrated as having a surface that extends substantially perpendicular to an axis of rotation **54** of the crankshaft **48**. The plates **64** are shown to include a plurality of apertures **66**. When the apertures **66** of face-to-face plates **64** are aligned, a connector can be passed through the apertures such that the input connection **58** is connected to the output connection **60**. While apertures and connectors are described for connecting the input and output connections **58**, **60**, one of the input and output connections **58**, **60** may alternatively include protrusions which pass through apertures of the other of the input and output connections **58**, **60**. Additional protrusions and corresponding indentations for mating the input and output connections **58**, **60** and imparting rotation from one to the other are also includable in

the input and output connections **58**, **60**. In an exemplary embodiment, the input connection **58** is also removable from the output connection **60** so as to impart modularity to the pump system **10**. Rotation of a crankshaft **48** within a pump assembly **32** rotates the output shaft **52** and the output connection **60**, which in turn rotates the input connection **58**, which rotates the input flange **50** and the crankshaft **48** of an adjacent pump assembly **32**.

[0023] The pump system **10** includes at least a first set **70** of two pump assemblies **32** linked end to end. The illustrated embodiments shown in FIGS. **1-3** include a first set **70** of pump assemblies **32** and a second set **72** of pump assemblies **32**. Each set **70**, **72** of pump assemblies **32** includes a single lead pump assembly **30** that is attached to a respective output shaft **28** of the gear box **26**. That is, the first set **70** of pump assemblies **32** includes a first lead pump assembly **30** attached to a first output shaft **28** of the gear box **26**, and the second set **72** of pump assemblies **32** includes a second lead pump assembly **30** attached to a second output shaft **28** of the gear box **26**. Extending from the first lead pump assembly **30** in the first set **70** is an output shaft **52** engageable with an input flange **50** of a second pump assembly **32** in the first set **70** of pump assemblies **32**. Likewise, the second pump assembly **32** is connected to a third pump assembly **32** in the first set **70** of pump assemblies **32**, and the second set **72** of pump assemblies **32** includes a second pump assembly **32** and a third pump assembly **32** directly and indirectly connected, respectively, to the second lead pump assembly **30**. Thus, in the illustrated embodiment of the pump system **10**, six pump assemblies **32** are connected to a single prime mover **22** and the output of the ultra high HP prime mover **22** can be divided between the pump assemblies **32** within the pump system **10**. For example, if a prime mover **22** has a horsepower rating of 18,000 HP, then six pump assemblies **32** with a horsepower rating of 3,000 HP could be arranged within the pump system **10**. The only restriction to providing the multiple pump assemblies **32** within the pump system **10** would be the weight limitations of each flat bed **18** or trailer bed **14** in the portable system **10** shown in FIGS. **1-3**. For example, if the flat bed **18** or trailer bed **14** was rated for 80,000 pounds and each pump assembly weighed 20,000 pounds then only four pump assemblies **32** could be placed on a single flat bed **18** or trailer bed **14**. This issue can be remedied by employing additional linked flat beds **18** or trailer beds **14**, and providing linking rods **62** as necessary between the input connection **58** and output connection **60** of adjacent pump assemblies **32** provided on adjacent platforms **12**.

[0024] While the pump assemblies **32** of the pump system **10** have been described to include a power assembly **34** attached to a single fluid assembly **36**, an alternative embodiment of a pump assembly **232** may include a power assembly **234** operatively connected to first and second fluid assemblies **236**, as shown in FIG. **6**. The ability to include a second fluid assembly to a power assembly is described in U.S. patent application Ser. No. 13/687,558 filed on Nov. 28, 2012 entitled "RECIPROCATING PUMP ASSEMBLY AND METHOD THEREOF", and is herein incorporated by reference in its entirety. With reference to FIG. **6**, the first and second fluid assemblies **236** each include an input valve connected to an inlet **242** and an output valve connected to an outlet **244**. As with the pump assembly **32**, the prime mover **22** is employed to rotate the crankshaft within the crankshaft housing **238** of the pump assembly **232** either directly or via a pinion shaft. FIG. **7** shows an exemplary embodiment of first and second fluid assemblies **236** each operated by a separate crankshaft **48** that are commonly rotated by a pinion shaft **275**. The pinion shaft **275** includes at least one pinion gear (not shown) which engages with at least one bull gear (not shown) on each of the first and second crankshafts **48**. The pinion shaft **275** is rotated by the prime mover **22** to operate the crankshafts **48**. FIG. **8** shows an exemplary embodiment for first and second fluid assemblies **236** to be rotated by a common crankshaft **48** that is rotated by the prime mover **22**. It is noted that while only the crosshead assemblies **40** are shown, the fluid assemblies **236** may be the same as in the previous embodiments. Also as in the previous embodiments, with reference again to FIG. **6**, the pump assembly **232** includes an input connection **258** and an output connection **260** that enable adjacent pump assemblies **232** or **32** to be directly inter-connected via the connections **258**, **260** or by an additional linking rod **62** as previously described. By adding a second fluid assembly **236** to a power assembly **234** of the pump assembly **232**, the amount of horsepower that the pump assembly **232** can consume is doubled. The structural improvements to the power assembly **234** to accommodate the first and second fluid assemblies **236** provide a compact design that can assist in arranging multiple pump assemblies **232** and/or **32** on a trailer bed **14** or flat bed **18** for transportation.

[0025] In addition to taking advantage of the output of a high horsepower prime mover **22**, because each pump assembly **32**, **232** includes an input connection **58**, **258** and an output connection **60**, **260**, a modular arrangement of the pump system **10** is enabled to include any number of pump assemblies **32**, **232** thereon in a variety of configurations.

[0026] While the invention has been described with reference to an exemplary embodiment or embodiments, it will be understood by those skilled in the art that various changes may be made and equivalents may be substituted for elements thereof without departing from the scope of the invention. In addition, many modifications may be made to adapt a particular situation or material to the teachings of the invention without departing from the essential scope thereof Therefore, it is intended that the invention not be limited to the particular embodiment disclosed as the best mode contemplated for carrying out this invention, but that the invention will include all embodiments falling within the scope of the claims. Also, in the drawings and the description, there have been disclosed exemplary embodiments of the invention and, although specific terms may have been employed, they are unless otherwise stated used in a generic and descriptive sense only and not for purposes of limitation, the scope of the invention therefore not being so limited. Moreover, the use of the terms first, second, etc. do not denote any order or importance, but rather the terms first, second, etc. are used to distinguish one element from another. Furthermore, the use of the terms a, an, etc. do not denote a limitation of quantity, but rather denote the presence of at least one of the referenced item.

What is claimed:

1. A pump system comprising:

a plurality of pump assemblies, each pump assembly having a power assembly and a fluid assembly, each power assembly of each pump assembly including a crankshaft, an input connection, and an output connection, the input connection of one pump assembly among the plurality of pump assemblies connected to the output connection of one pump assembly among the plurality of pump assemblies;

at least one lead pump assembly within the plurality of pump assemblies configured to be connected to a prime mover commonly driving the plurality of pump assemblies.

2. The pump system of claim **1** wherein the plurality of pump assemblies includes a first set of pump assemblies and a second set of pump assemblies, each set of pump assemblies including a lead pump assembly configured to be connected to the prime mover.

3. The pump system of claim **2** wherein fluid assemblies of the pump assemblies in the first set of pump assemblies are separated from fluid assemblies of the pump assemblies in the second set of pump assemblies by the power assemblies of the pump assemblies in the first and second sets of pump assemblies.

4. The pump system of claim **2**, wherein the first set of pump assemblies is arranged on a first side of a platform, and the second set of pump assemblies is arranged on a second side of the platform opposite the first side.

5. The pump system of claim **1** further comprising the prime mover, wherein a sum of the horsepower rating of the plurality of pump assemblies is substantially equal to the horsepower rating of the prime mover.

6. The pump system of claim **1** wherein the fluid assembly of one pump assembly among the plurality of pump assemblies includes a first fluid assembly and a second fluid assembly, the power assembly of the one pump assembly interposed between the first and second fluid assemblies.

7. The pump system of claim **1** wherein the plurality of pump assemblies are mounted on at least one movable platform.

8. The pump system of claim **7** wherein the at least one movable platform includes at least one of a trailer bed towable by a truck and a flat bed connected to a train.

9. The pump system of claim **1** wherein at least a subset of adjacent pump assemblies among the plurality of pump assemblies are connected end-to-end relative to the crankshaft of each pump assembly.

10. The pump system of claim **1** wherein the input connection of the one pump assembly among the plurality of pump assemblies is removably connected to the output connection of the one pump assembly among the plurality of pump assemblies.

11. The pump system of claim **1**, wherein each of the pump assemblies includes a housing, the input connections and the output connections extending exteriorly of the housing.

12. The pump system of claim **1**, wherein the input connection and the output connection are respectively connected to an input shaft and an output shaft, and an axis of the input shaft and an axis of the output shaft extend substantially parallel to a rotation axis of the crankshaft within each pump assembly among the plurality of pump assemblies.

13. The pump system of claim **1**, wherein the input connection includes an input plate and the output connection includes an output plate, the input plate and output plate arrangeable and configured to connect to each other in a face-to-face relationship.

14. The pump system of claim **13**, wherein at least one of the input and output plates includes at least one aperture, and further comprising at least one connector passing through the at least one aperture.

15. The pump system of claim **1**, further comprising a gear box including at least one output shaft connected to the input connection of the at least one lead pump assembly.

16. A method of pumping pressurized fluid to a site, the method comprising:

selecting a prime mover;

selecting a number of pump assemblies, each pump assembly having a power assembly and a fluid assembly, each power assembly including a crankshaft, an input connection, and an output connection;

arranging the pump assemblies on a surface;

connecting the input connection of each pump to an output connection of an adjacent upstream pump; and,

connecting at least one lead pump to the prime mover to commonly drive the plurality of pumps.

17. The method of claim **16**, wherein the prime mover has a power rating and selecting a number of pump assemblies includes selecting a number of pump assemblies having a combined power rating substantially equivalent to the power rating of the prime mover.

18. The method of claim **16** wherein arranging the pump assemblies on a surface includes arranging the pump assemblies on a movable platform.

19. The method of claim **16** wherein selecting a number of pump assemblies includes selecting at least three pump assemblies.

20. The method of claim **16** wherein arranging the pump assemblies includes arranging two sets of at least two pump assemblies, each set including one lead pump assembly connected to the prime mover and at least one additional pump assembly.

* * * * *