Oct. 23, 1956 W. H. FRANKLAND 2,767,961

RADIANT HEATING AND AIR CONDITIONING SYSTEM

Filed Feb. 26, 1953 2 Sheets-Sheet 1

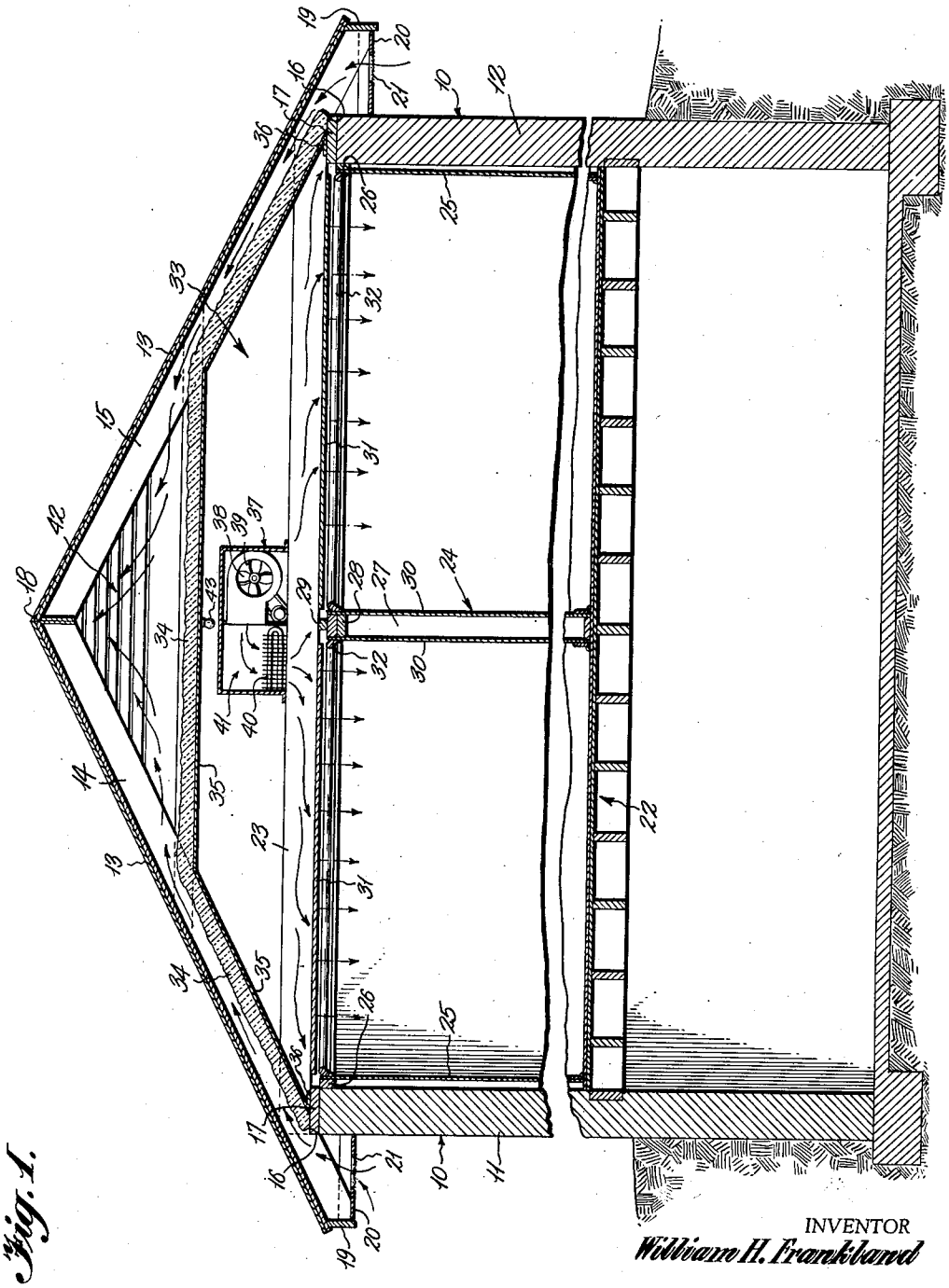

Fig. 1.

INVENTOR
William H. Frankland

BY Mason, Fenwick & Lawrence
ATTORNEYS

Oct. 23, 1956 W. H. FRANKLAND 2,767,961

RADIANT HEATING AND AIR CONDITIONING SYSTEM

Filed Feb. 26, 1953 2 Sheets-Sheet 2

Fig. 2.

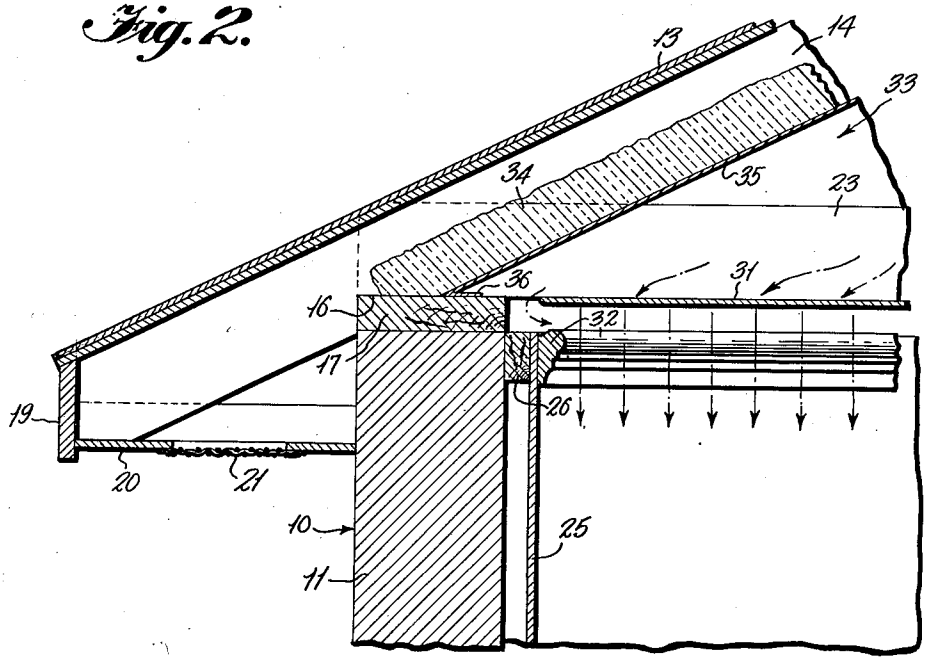

Fig. 3.

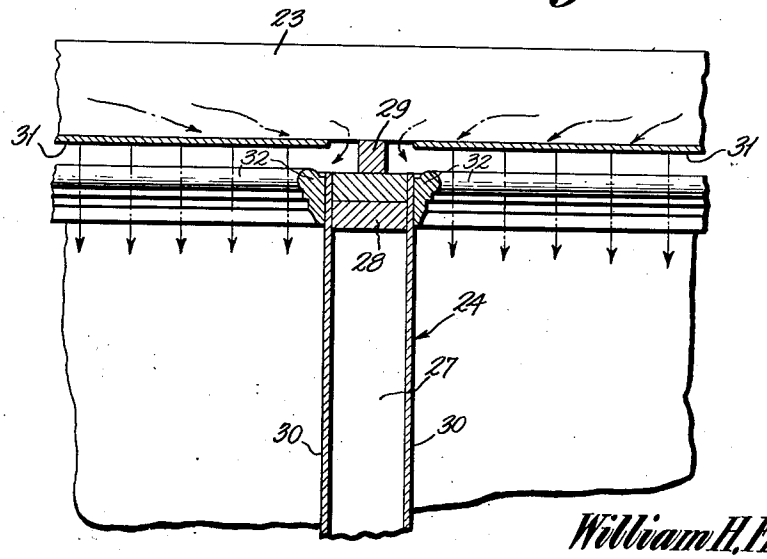

INVENTOR
William H. Frankland

BY Mason, Fenwick & Lawrence
ATTORNEYS

United States Patent Office 2,767,961 Patented Oct. 23, 1956

2,767,961

RADIANT HEATING AND AIR CONDITIONING SYSTEM

William H. Frankland, Tampa, Fla.

Application February 26, 1953, Serial No. 338,997

8 Claims. (Cl. 257—8)

The present invention relates in general to air conditioning and heating systems, and more particularly to radiant heating and air conditioning systems for buildings and homes.

It has been known for a number of years that the provision of radiant heating and cooling surfaces such as ceilings, floors or walls, affords an extremely efficient method of heating the rooms of a building. It has been determined for example that if the ceiling of a room is heated to approximately 80° to 85° F., the occupant of the room would be entirely comfortable even though the air temperature in the room may be as low as 65° F. This is because heat rays from the radiant heating surface travel at right angles to the plane of the radiant heating surface, and heat any body intercepting the radiant heat rays without perceptibly increasing the air temperature in the room.

Heretofore, the number of different methods before employed to heat these various radiant heating surfaces, such as embedding circulating hot water pipes in the plaster ceiling or walls or in the floors, embedding low voltage resident wire in the plaster ceiling or walls or in the floors, or in the case of radiant heating ceilings, by the use of convector type pipes disposed just above the ceiling with the attic floor level insulated along the top of the ceiling joists creating heat ducts between each pair of ceiling joists to circulate heat between the attic floor and the plastered ceiling and heat the plaster ceiling. Still another method has been to provide a conventional warm air heating system in which the warm air registers are disposed at a position in the walls of the room adjacent the ceiling level to direct the warm air from the register against the ceiling surface. All of these systems, however, have proven to be extremely expensive and complicated, and have frequently resulted in a high incidence of cracking and breaking of the ceiling plaster.

An object of the present invention is the provision of an air conditioning and heating system for buildings, in which a radiant heating ceiling is heated and cooled in a novel manner to obviate the disadvantages of the above system.

Another object of the present invention is the provision of a novel radiant heating and air conditioning system for homes and the like involving radiant ceilings, in which the ceiling is heated and cooled in a novel manner to effect controlled heating and cooling of objects within the room.

Another object of the present invention is the provision of a novel air conditioning and heating system for homes and the like, having a radiant heating ceiling, which is extremely simple and inexpensive to construct and operate, and effects controlled heating and cooling of objects in the room with a high degree of efficiency.

Another object of the present invention is the provision of a radiant heating and air conditioning system for homes and the like, in which a radiant heating ceiling is constructed in a novel manner to avoid cracking and to

minimize noise and moisture condensation in connection with the system.

Other objects, advantages and capabilities of the present invention will become apparent from the following detail description taken in conjunction with the accompanying drawings showing a preferred embodiment of the invention.

In the drawings:

Figure 1 is a sectional view of a house, showing a radiant heating and air conditioning system embodying the present invention applied for heating the ceiling of the first floor;

Figure 2 is a detail section view of a portion of the house shown in Figure 1, illustrating the particular construction of the eaves to effect cooling of the outer surface of the plenum chamber formed in the attic of the house and the construction of the air passages at the outer edges of the ceiling panels; and

Figure 3 is a detail section view of a portion of the ceiling and medial partition wall illustrating the manner in which these components are joined to produce air passages between the ceiling and partition walls.

The present invention in general involves the provision, in the attic of a dwelling in which the heating and air conditioning system is to be installed, of an area sealed from all outside air forming a plenum chamber immediately above the ceiling panel of the rooms of the dwelling, into which chamber heated or cooled air is induced to control the temperature of the air in the sealed area. The edges of the ceiling panels are spaced slightly from the walls of each room so as to form what might be termed a "breathing passage" extending entirely around the ceiling panel, through which moisture in the room may be drawn into the sealed attic area, and which permits free expansion and contraction of the ceiling panel to prevent cracking. The temperature of the sealed attic area or plenum chamber effects proportionate heating of the ceiling panels, which in turn operate as radiant heating panels for the room to maintain body heat of persons in the room by interception of the radiant heat rays.

The invention will be more fully understood from the following description, referring to the accompanying drawings, wherein like reference characters designate corresponding parts throughout the several figures. The building structure in which the present heating and air conditioning system is to be installed, in the preferred embodiment shown in the drawings, is of the modern one floor type construction comprising masonry side walls **10** having front and rear walls **11** and **12**, respectively, and a gable roof **13** formed of groups of parallel rafters **14** and **15** notched at **16** to seat upon and be anchored to key plates **17** at the top of the masonry front and rear walls **11** and **12** and converging to a peak, indicated at **18**, aligned with the transverse medial axis of the dwelling. The rafters **14** and **15**, in accordance with present construction practice, extend outwardly of the side walls of the building beyond the notches **16** and are covered by planking **19** and **20** to form overhanging eaves on opposite side walls of the dwelling. Rectangular eave vents **21** are formed in the downwardly facing eave planking **20** at selected points and covered with screen wire or the like to provide ventilating openings for a purpose to be later described.

Suitable floor joists are anchored to the walls **11** and **12** of the dwelling to support the floor **22**, and parallel ceiling joists **23** are supported with their outer ends on the key plates **17**, and at their inner ends or intermediate their length by partitions **24**.

A special type sealing construction is employed in connection with the heating and air conditioning system of the present invention, the ceiling and walls of the room

being constructed in a novel manner to provide air passages extending continuously about the perimeter of the ceiling of each room and disposed directly above each wall and to permit the ceiling to expand and contract without cracking. To this end, the walls of each room bounding the masonry outer walls of the building, such as the masonry walls **11** and **12**, are formed by spacing the plaster or dry wall **25** out from the masonry outer walls of the building approximately one inch by means of furring strips **26** formed for example one by two inch framing members. The upper furring strips **26** and the plaster or dry wall panels **25** preferably terminate approximately one inch below the lower face of the ceiling joist **23**.

In like manner, the partitions **24** are formed of two by four inch framing in accordance with conventional construction practice, but the vertical framing studs **27** are cut to such a size that the key plates **28** mounted on top thereof lie approximately one inch below the lower edge of the ceiling joist **23**, and a one by two inch spacing strip **29** is mounted on the key plates **28** to support the ceiling joist **23**.

A breathing passage of approximately one inch width extending entirely around the room at the upper corners of the walls is formed by the aforementioned spacing of the plaster walls of the room relative to the ceiling joists, and by forming the plaster or dry wall ceiling of panels **31** terminating approximately one inch from the one by two inch spacing plate **29** and from the key plates **17** capping the masonry outer walls.

By stopping the plaster ceiling a preselected distance from the spacing members **29** and the key plates **17** of the outer masonry walls, the plaster panels **31** forming the ceiling are allowed to expand and contract freely when these panels are heated and cooled by the heating and cooling system to be later described. This materially reduces cracking of the ceiling plaster, as most plaster wall and ceiling finishes which extend continuously between the framing members forming the walls are so wedged between these framing members that they have no opportunity to expand and contract in accordance with variations in temperature.

In the preferred form of construction, the opening which extends around the upper boundary of each room is hidden from view by means of a picture mold **32** which is mounted on the plaster or dry wall panels **25** and **30** of the room at a point spaced immediately below the upper edge of these plaster or dry wall panels.

These ceiling panels **31** are designed to form the radiant heating panels for each room, and to this end are conveniently heated by forming a plenum chamber, indicated generally at **33**, in the attic of the building structure between the ceiling joist **23** and rafters **14**, **15**, occupying a volume considerably less than the total volume of the attic. This plenum chamber **33** is formed by insulating the attic along the roof line for a portion of the length of the rafters **14**, **15**, by means of insulation **34**, such for example as three inch bats of fibre glass insulation, and by lapping sealing paper or sheet material **35** over the underside of the rafters **14**, **15**. At a preselected level above the ceiling joist **23**, the insulation **34** and sealing paper **35** extends horizontally across the attic in a plane parallel to the plane of the ceiling joist **23**, and the sealing paper at the lower ends is lapped through the acute angles formed between the rafters **14**, **15** and the key plates **17**, as indicated at **36**, to insure an effective vapor seal at these points.

Located within this plenum chamber **33** and preferably supported on the ceiling joist **23** is an air conditioning and warm air heating unit, schematically indicated at **37**, of any of the conventionally commercially available types. In accordance with conventional construction, the air conditioning and warm air heating unit **37** is illustrated as having a blower **38** arranged to draw air in from the plenum chamber **33** through an intake **39**, and a coil system **40** disposed in the outlet chamber **41** of the heating and cooling unit, the coil system consisting of a plurality of coil pipes adapted to selectively carry cold water or steam, and a plurality of parallel vanes supported on the coil pipes. This device serves as a heating unit when steam is coupled from a conventional source through the coil pipes, and serves as a cooling and air conditioning unit when cold water is circulated through the coil pipes, the coil pipes and vanes in this latter instance serving both to cool the air passing thereover and to reduce the humidity thereof through condensation of humidity on to the cooling vanes.

In the preferred form of construction, suitable louvre vents indicated at **42**, are disposed in the walls closing the ends of the attic portion immediately beneath the peak **18** of the roof **13**, to form an outlet for air drawn through the eave vents **21** and circulated between the rafters **14** and **15** along the surface of the insulation **34**.

Operation of the system is substantially as follows. When the system is operating as a heating system, the plaster ceiling panels **31** are designed to be heated to the necessary temperature to radiate the required quantities of heat into the room by heating the air in the sealed plenum chamber portion **33** of the attic to a preselected temperature. As indicated above, the effective temperature of the radiant heating panels formed by the ceiling **31** required to radiate heat rays to maintain body heat at a comfortable temperature is only approximately 83° F. With the present system, in which only the limited volume of air within the plenum chamber portion **33** of the attic must be heated, the temperature in the plenum chamber need not exceed 85° F. to induce a temperature of approximately 83° F. in the radiant heating panels **31**. The temperature of the air in the plenum chamber portion **33** is conveniently elevated to the desired temperature by inducing warm air into the chamber portion **33** from the warm air heating unit **37**, which is preferably thermostatically controlled by means of a thermostat disposed in the plenum chamber portion **33**.

Because only a limited volume of air in the plenum chamber **33** is required to be heated, as compared to the very large volumes of air required to be heated in convection heating systems, the load on the the heating unit **37** is extremely small as compared with the load on heating units of convection heating systems, permitting less expensive units to be used.

The expanded hot air in the plenum chamber **33** resulting from discharge of heated air into the plenum chamber from the heating unit **37** may expand to the extent necessary through the passages extending entirely around the perimeter of the ceiling panels **31** and into the room below, thus preventing increase of pressure within the plenum chamber **33**. Except for this limited expansion of air through the passages bounding the ceiling passages **31** due to thermal expansion of air in the plenum chamber **33**, the heated air otherwise remains in the plenum chamber, resulting in improved heating of the radiant heating ceiling panels **31**, the upper surfaces of which open directly into the plenum chamber **33**. The open passages surrounding the ceiling panels **31**, as explained above, also minimize cracking of the ceiling plaster because the plaster panels are free to expand and contract in accordance with variations in temperature, as opposed to conventional construction practice in which the ceiling panels are wedged between the vertical framing members of the building and therefore have no opportunity to expand in the plane of the plaster.

When the present system is used for air conditioning purposes, cold water is conducted through the pipes of the coil **40** and air drawn upward from the room into the plenum chamber **33** through the air passage extending around the ceiling panels **31** is drawn through the intake **39** of the blower **38** and discharged through the cooling coil **40**. This cooled and dehumidified air discharged from the unit **37** into the plenum chamber **33**, since it is cool air, seeks a lower level and therefore passes

through the air passages extending around the ceiling panels 31 and into the rooms below. Since the unit 37 is located in the plenum chamber area 33 above the rooms, it is the warmer air, which seeks a higher level and passes upwardly into the plenum chamber 33 from the room below, which is primarily drawn through the blower 38 and discharged through the cooling coils 40, resulting in a most efficient handling of the air to be conditioned.

This system also displays particular advantages in regard to the reduction of humidity in the rooms below during the cool season. It is a well recognized principle that humidity tends to find its way upward into the upper levels of the area to which the air is confined. In the present system, when the unit 37 is being used as an air conditioner, the attic area forming the plenum chamber 33 is somewhat cooler than the area in the rooms below resulting in a natural vapor pressure from the living quarters of the house toward the attic area. Since the ceiling of the house in accordance with the present invention is not insulated and has no vapor barrier, vapor will flow through the passages bounding the ceiling panels 31 into the cold area 33 without depositing moisture on the ceiling. Once the moisture laden vapor is in the attic area defined by the plenum chamber 33, moisture is readily removed by passage of the air over the vanes of the cooling coils 40 which are at a temperature below the dew point of the air in the plenum chamber area.

Further, since plaster ceilings serve as radiant heating panels when they are at temperatures in excess of 80° F., it is obvious that one of the first jobs air conditioning has to do is to cool down these ceiling surfaces during the hot season. The provision of the plenum chamber 33 in direct contact with the upper surface of the ceiling panels 31, and the insulation of this plenum chamber area 33 from the roof 13, causes particularly effective cooling of the ceiling panels 31 during the hot season so that the radiant rays from the ceiling panels 31 are no longer at an effective temperature to help maintain body heat. The plenum chamber area is further maintained in a cool condition by the air flow induced between the rafters 14 and 15 from the inlet defined by the eave vents 21 to the outlets at the louvre vents 42, a more or less continuous air stream over the exterior surface of the insulation 34 being induced by this air flow path during the warm season.

Because the instant heating and cooling system need only have the capacity to heat and cool the volume of air in the restricted plenum chamber area 33, much less expensive heating and cooling air conditioning units may be employed with the present system. In addition, the noise of the heating and air conditioning system is materially reduced relative to conventional heating and air conditioning systems since no grills or convectors are employed, and the continuously moving bodies of air incident to heat convection systems are done away with. In the present system the opening around the perimeter of the room bounding the plaster ceiling panels 31 is of such a large area that movement of air by expansion or natural inclination is not heard.

If desired, the vapor sealing paper or sheet material 35 may have a metallic or reflective inner surface and a night light of low wattage may be mounted in the medial plane of the plenum chamber 33, as indicated at 43, so that slight illumination of the perimeter of each room is effected by reflection of the light through the air passages bounding the ceiling panels 31, producing an effective night light for the home.

While but one particular embodiment of the invention has been particularly shown and described, it is distinctly understood that the invention is not limited thereto but that various modifications may be made in the invention without departing from the spirit and scope thereof, and it is desired, therefore, that only such limitations shall be placed thereon as are imposed by the prior art and are set forth in the appended claims.

What is claimed is:

1. In a building having rooms and an attic area extending thereover, a heating and air cooling system comprising ceiling panel means substantially coextensive with each of said rooms forming a radiant heating panel therefor, plenum chamber means located in said attic area forming a unitary chamber substantially coextensive with the group of ceiling panel means for confining a body of air to be heated in surface contact with said ceiling panels, said ceiling panels constituting a lower wall of said plenum chamber means to be heated and cooled by direct thermal contact with the air in said plenum chamber, means affording communication of moisture-laden air from said rooms through the group of ceiling panel means to said plenum chamber for minimizing moisture condensation on said ceiling panel means, and air conditioning and heating means disposed in said plenum chamber means for heating and cooling the body of air therein, the temperature of said radiant heating ceiling panel and the heat radiated thereby into the room being determined by heat transfer between the body of air within said plenum chamber means and said ceiling panels.

2. In a building having rooms and an attic extending thereover, a heating and air cooling system comprising a ceiling panel for each room of said building forming heat radiating panels therefor, vapor impervious means extending through a portion of said attic immediately overlying said ceiling panels in spaced relation therewith, said vapor impervious means and said ceiling panels forming upper and lower walls of a plenum chamber extending uninterruptedly over an area substantially coextensive with the group of ceiling panels for confining a body of air to be heated in surface contact with said ceiling panels to constitute said body of air the heating and cooling source for said ceiling panels air conditioning and heating means disposed in said plenum chamber for heating and cooling the body of air therein whereby said ceiling panels radiate heat into the rooms in accordance with the temperature of said ceiling panels produced by heat transfer between the heated body of air within said plenum chamber and said ceiling panels, and means affording a sufficient conduction path between said ceiling panels for admission of moisture-laden air from said rooms to said plenum chamber when said heating and air conditioning means is cooling said body of air in said plenum chamber to substantially eliminate condensation of moisture on said ceiling panels.

3. In a building having rooms and an attic area extending thereover, a heating and air cooling system comprising ceiling panels for each of said rooms substantially coextensive with the area of said rooms and forming radiant heating panels therefor, vapor barrier walls of insulating material extending through the attic area immediately overlying said ceiling panels, a plenum chamber extending uninterrutedly over substantially the area of the attic, said ceiling panels and said vapor barrier walls forming lower and upper walls respectively of said plenum chamber, said plenum chamber confining a body of air to be heated in surface contact with said ceiling panels to form the heating and cooling source for said ceiling panels, heating and air conditioning means disposed in said plenum chamber for heating and cooling the body of air therein to heat and cool said heat radiating ceiling panels through heat transfer from the body of air within said plenum chamber, and means defining a convection path for air from outside of said building over the exterior surface of said vapor barrier walls.

4. In a building having rooms and an attic area extending thereover, a heating and air cooling system comprising ceiling panels for each of said rooms forming heat radiating means therefor, plenum chamber means located in said attic area extending uninterruptedly over substantially the area of the attic for confining a body of air to be heated in surface contact with said ceiling panels to

impart heat thereto, said ceiling panels being peripherally spaced from each other and from the walls of said rooms to define uninterrupted air passages extending entirely around the perimeter of said ceiling panels for conduction of moisture-laden air therethrough into said plenum chamber without loss of moisture on said ceiling panels, and air conditioning and heating means disposed in said plenum chamber means for heating and cooling the body of air therein, the temperature of said heat radiating ceiling panels being determined by heat transfer between the body of air within said plenum chamber means and said ceiling panels.

5. In a building having rooms and a roof including inclined roof portions defining an attic area extending over said rooms, a heating and air cooling system comprising ceiling panels for each of said rooms forming heat radiating panels therefor, vapor barrier walls including wall portions immediately underlying and in parallelism with said inclined roof portions and an interconnecting wall portion spaced above and in substantial parallelism with said ceiling panels forming in conjunction with said ceiling panels the upper and lower walls respectively of a plenum chamber extending substantially uninterruptedly over the area of the attic for confining a body of air to be heated in surface contact with said ceiling panels, said body of air constituting the heating and cooling source for said ceiling panels, means defining air passages through the group of ceiling panels for conducting moisture-laden air without condensation of moisture onto said ceiling panels from said rooms into said plenum chamber, and air conditioning and heating means disposed in said plenum chamber for heating and cooling the body of air therein whereby said ceiling panels radiate heat into the rooms in accordance with the temperature of said ceiling panels produced by heat transfer between the heated body of air within said plenum chamber and said ceiling panels.

6. In a building having rooms and an attic area extending thereover, a heating and air cooling system comprising a ceiling panel for each of said rooms forming heat radiating panels therefor, vapor barrier walls extending over a portion of said attic area immediately overlying said ceiling panels and spaced therefrom forming in conjunction therewith a plenum chamber extending substantially uninterruptedly over the area of the attic for confining a body of air to be heated in surface contact with said ceiling panels, said body of air constituting the heating and cooling source for said ceiling panels, said ceiling panels and vapor barrier walls forming respectively the lower and upper walls of said plenum chamber, at least some of said ceiling panels being peripherally spaced from the walls of said rooms and from said vapor barrier walls to define uninterrupted air passages extending entirely around the perimeter of each of said ceiling panels for passage of air between said rooms and said plenum chamber without condensation of moisture onto said ceiling panels, and air conditioning and heating means disposed in said plenum chamber for heating and cooling the body of air therein whereby said ceiling panels radiate heat into the rooms in accordance with the temperature of said ceiling panels produced by heat transfer between the heated body of air within said plenum chamber and said ceiling panels.

7. In a building having rooms and a roof including inclined roof portions defining an attic area extending over said rooms, a heating and air cooling system comprising a ceiling panel for each of said rooms forming radiant heating panels therefor, vapor barrier walls including wall portions immediately underlying and in parallelism with said inclined roof portions and an interconnecting wall portion in substantial parallelism with said ceiling panels, said vapor barrier walls forming in conjunction with said ceiling panels the upper and lower walls respectively of a plenum chamber extending substantially uninterruptedly over the area of the attic for confining a body of air to be heated in surface contact with said ceiling panels, said body of air constituting the heating and cooling source for said ceiling panels, means defining air passages through the group of ceiling panels for conducting moisture-laden air without condensation of moisture onto said ceiling panels from said rooms into said plenum chamber, heating and air conditioning means disposed in said plenum chamber for heating and cooling the body of air therein to heat and cool said heat radiating ceiling panels through heat transfer from the body of air within said plenum chamber, and means forming an air convection path extending entirely over the exterior surface of said vapor barrier wall portions between said wall portions and the roof and opening to the outside of said building for conducting outside air over the exterior surfaces of said vapor barrier wall portions.

8. A heating and air cooling system for buildings having rooms and a roof including inclined roof portions defining an attic area extending over said rooms comprising a ceiling panel for each of said rooms substantially coextensive therewith and forming a radiant heating panel therefor, vapor barrier walls including wall portions immediately underlying and in parallelism with said inclined roof portions and an interconnecting wall portion in substantial parallelism with and spaced above said ceiling panels, said vapor barrier walls forming in conjunction with said ceiling panels the upper and lower walls respectively of a plenum chamber extending substantially uninterruptedly over the area of the attic for confining a body of air to be heated in surface contact with said ceiling panels, said body of air constituting the heating and cooling source for said ceiling panels, room walls disposed below said ceiling panels and spaced at their tops below said ceiling panels and said vapor barrier walls being peripherally spaced from said ceiling panels in the plane thereof to define uninterrupted air passages between said rooms and said plenum chamber extending entirely around the periphery of each of said ceiling panels for passage of moisture-laden air from said rooms into said plenum chamber without condensation of moisture onto said ceiling panels, and heating and air conditioning means disposed in said plenum chamber for heating, cooling and dehumidifying the body of air therein to heat and cool said radiant heating ceiling panels through heat transfer from the body of air within said plenum chamber, and means forming an air convection path extending entirely over the exterior surfaces of said vapor barrier wall portions between said wall portions and the roof and opening to the outside of the building for conducting outside air over the exterior surfaces of said vapor barrier wall portions.

References Cited in the file of this patent

UNITED STATES PATENTS

1,028,725	Hodgson	June 4, 1912
2,099,632	Starr	Nov. 16, 1937
2,206,119	Persons	July 2, 1940
2,255,292	Lincoln	Sept. 9, 1941
2,382,340	Smith	Aug. 14, 1945
2,598,842	Scott	June 3, 1952