United States Patent [19]

McKee

[11] **3,888,410**

[45] **June 10, 1975**

[54] **FLUID CONTROL APPARATUS AND METHOD**

[75] Inventor: **Charles W. McKee,** Seaford, Va.

[73] Assignee: **United States Government National Aeronautics and Space Adm., Office of General Counsel-Code GP,** Washington, D.C.

[22] Filed: **Nov. 30, 1973**

[21] Appl. No.: **420,424**

[52] **U.S. Cl.** ..... **233/6;** 233/20 R; 233/25; 233/46; 233/DIG. 1

[51] **Int. Cl.** **B04b 1/16**

[58] **Field of Search** ..... 233/1 R, DIG. 1, 3, 4, 233/5, 6, 21, 25, 27, 28, 20 R, 46, 47 R

[56] **References Cited**

UNITED STATES PATENTS

3,026,719 3/1962 Kopczynski ..... 233/1 R

3,344,984 10/1967 Kopczynski ..... 233/27 X

Primary Examiner—George H. Krizmanich

Attorney, Agent, or Firm—Howard Osborn; John R. Manning

[57] **ABSTRACT**

A circular container is caused to orbit about a circular path while being held in substantially fixed orientation in the orbital plane thus causing liquids and gases therein to separate, even when in a zero gravity environment, with the liquid flowing tidally around a circular wall of the container. Flexible conduits provide for flow of liquids or gases to and from the interior of the container without the necessity of providing rotating seals between the conduits and the container.

4 Claims, 4 Drawing Figures

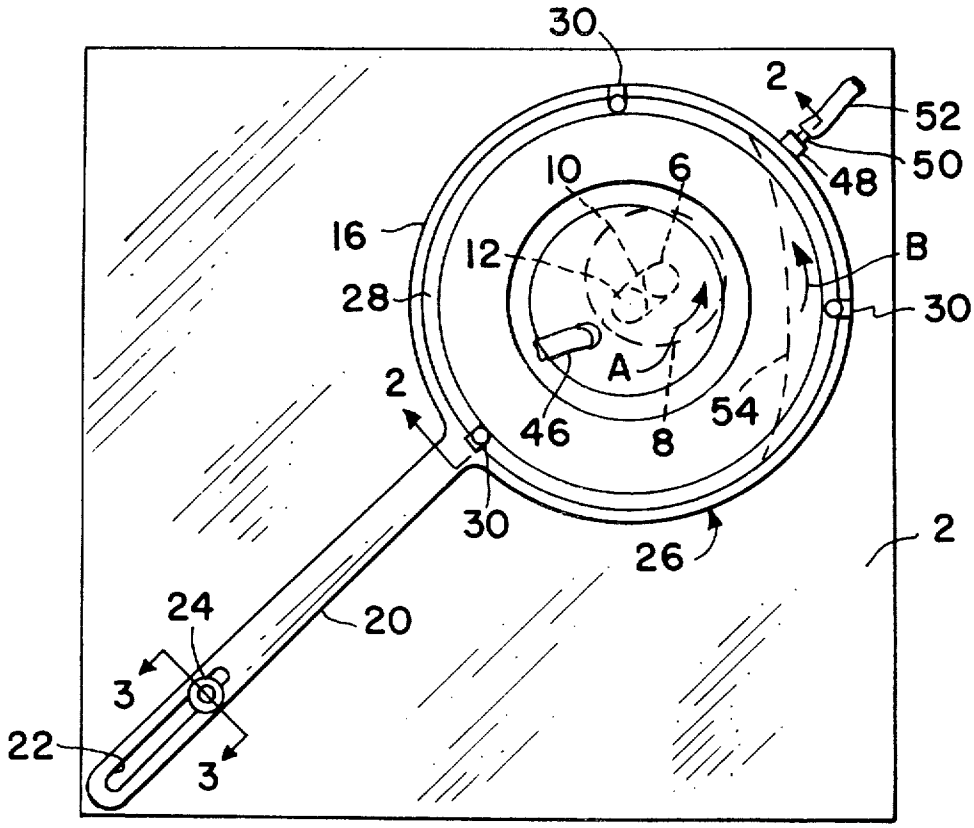

FIG. 1

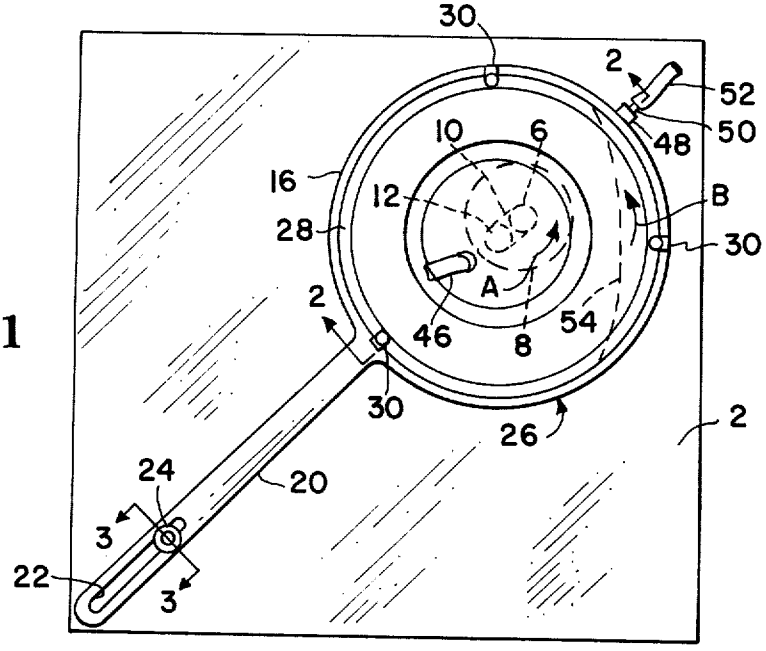

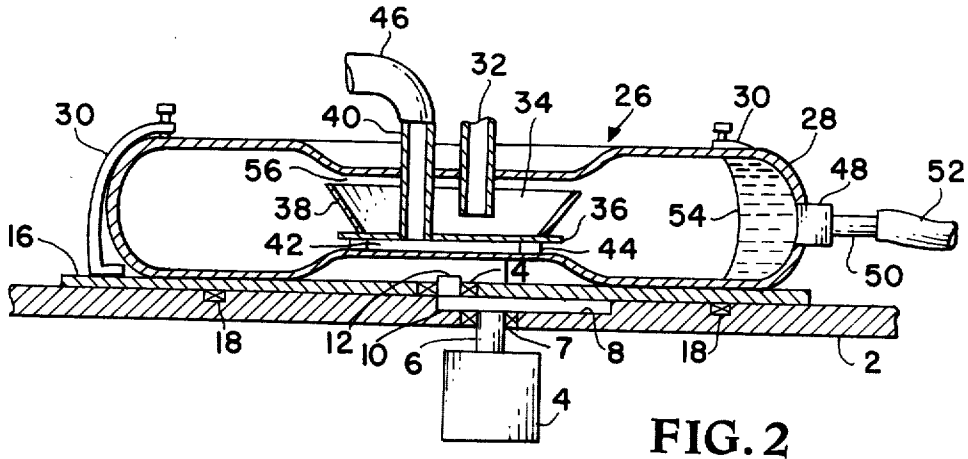

FIG. 2

FIG. 3

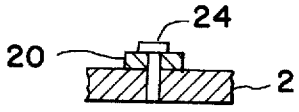

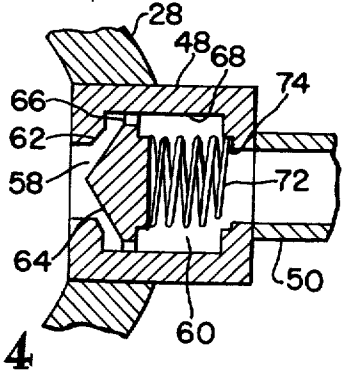

FIG. 4

FLUID CONTROL APPARATUS AND METHOD

ORIGIN OF DISCLOSURE

The invention described herein was made by an employee of the United States Government and may be manufactured and used by or for the Government for governmental purposes without the payment of royalties thereon or therefor.

BACKGROUND OF THE INVENTION

This invention is in the field of liquid and gas separation.

The handling of fluid materials in zero gravity environments presents problems in that the liquid and gas components tend to mix and will not separate by merely standing since such separation normally relies on the effects of gravity.

It has been proposed heretofore to effect liquid and gas separation under such conditions by rotating a body of the mixture in an enclosure whereby centrifugal force causes the heavier liquid to collect at the outside of the container with the gas phase at the center thereof. However, the removal of liquids or gases from such a rotating container or the introduction of liquids or gases into the container was necessarily performed through conduits having rotary seals. Such rotary seals often fail or are inefficient and, in many instances, develop leaks rendering them unreliable. In other instances, bodies of liquid and gas in a container have been rotated by means of paddles or agitators rotating within the container to produce the necessary centrifugal force. Even such arrangements, however, necessitated rotary seals about the driving means for the impeller and were subject to the disadvantages noted above.

SUMMARY OF THE INVENTION

The present invention provides for applying centrifugal forces to liquids and/or gases in a container without the necessity of extending rotary shafts into the container and without providing for rotary seals in conduits leading to and from the interior of a rotary container. In general, the invention comprises a container having a circular outer wall and mechanism for causing the container to move in an orbital path in substantially the plane of the circular outer wall thereof while maintaining the diameters of the container substantially fixedly oriented in space whereby conduits leading to and from the container may include flexible tubing without the necessity of providing rotary seals.

It is, therefore, a principal object of this invention to provide a method and apparatus for controlling and separating fluids without the necessity of using seals between relatively movable parts.

BRIEF DESCRIPTION OF THE DRAWINGS

FIG. 1 is a schematic plan view of apparatus embodying the present invention;

FIG. 2 is an enlarged fragmentary sectional view taken substantially along the line 2—2 of FIG. 1; and

FIG. 3 is a fragmentary sectional view taken substantially on the line 3—3 of FIG. 1; and

FIG. 4 is a fragmentary sectional view taken substantially along line 2—2 of FIG. 1.

DESCRIPTION OF ONE EMBODIMENT OF THE INVENTION

The drawings only schematically illustrate apparatus capable of performing the method of the present invention and apparatus achieving the objects of the invention may take other forms. In the drawings, numeral **2** indicates a suitable base member for supporting the operating portions of the apparatus and may be in the form of the flat plate shown. A suitable drive motor **4** is fixedly mounted relative to the base plate **2** by means not shown herein and its output shaft **6** is journalled in a bearing **7** in the base plate **2.** The upper surface of plate **2** is provided with a circular cavity **8** concentric about the shaft **6.** A crank arm **10** is secured to the shaft **6** for rotation within the cavity **8** and is provided adjacent its outer end with a crank pin **12.** The crank pin **12** is journalled in a bearing **14** mounted in a movable plate **16.** Suitable bearing means **18** may also be provided between plates **2** and **16** to provide for easy movement of plate **16** over the surface of plate **2.** The plate **16** is provided with an elongated radial extension arm **20** extending outwardly over plate **2** and having an elongated longitudinal slot **22** therein adjacent its outer end. A headed pin **24** is fixed to the plate **2** and extends upwardly through the slot **22** whereby the slot slidably embraces the shank of pin **24.** Thus, when the motor device **4** operates to rotate shaft **6,** crank pin **12** moves in a circular orbital path and causes the bearing **14** and adjacent portions of the plate **16** to move in a similar orbital path. The slot **22** and pin **24** prevent the plate **16** from rotating about the axis of shaft **6** while permitting the orbital movement previously described. In other words, the slot **22** and pin **24** maintain the plate **16** oriented in substantially the same direction at all times during its orbital movement.

A container generally indicated at **26** is of circular shape when viewed as in FIG. **1** and is provided with an outer circumferential wall **28** of circular configuration. Suitable clamp means **30** may be provided to hold the container **26** in fixed position on its supporting plate **16,** preferably with the central region of the container overlying the crank pin **12.** The container **26** is provided with a centrally located gas outlet tube **32** extending into the central region of the interior of container **26** within a region **34** substantially completely encompassed by baffle means defined by flat plate **36** and conical baffle plate **38.** The baffle means are for the purpose of preventing entry of droplets of liquid into the gas conduit **32.** As shown, an inlet conduit **40** extends to the interior of the container **26** and through baffle plate **36** to communicate with a space **42** between the plate **36** and an end wall of the container **26.** The end wall and the plate **36** are held in spaced relation by suitable spacer means **44.** A flexible conduit **46,** which may be in the nature of rubber tubing or the like, is connected to the rigid conduit **40** for a purpose to be described. Also, as shown, the circular outer wall **28** of the container **26** is provided with a port controlled by a suitable valve **48,** to be described, and leading to a nipple **50** to which a flexible conduit **52** similar to the conduit **46** is connected.

From the foregoing description it will be apparent that rotation of shaft **6** will cause the plate **16** and container **26** to move in the orbital path defined by rotation of the crank pin **12** but that the plate **16** and container will not continuously rotate but will be held to be

in substantially fixed orientation relative to the plate **2**, the axis of shaft **6**. It is further to be noted that the diameters of the container **26**, that is, the diameters across the circular end wall **28**, define a plane substantially parallel to the plane of orbital movement of crank pin **12**. Thus, any liquid within the container **26** will have sufficient centrifugal force applied thereto to cause it to move outwardly against the circular wall **28**, as indicated at **54**, and the orbital motion of the container causes the body of liquid to move with tidal movement around the inner periphery of the wall **28** as the container continues to orbit. FIG. **2** shows the tidal formation as it would be in zero gravity. In the presence of gravity the tide face would assume a configuration of approximately 45° from the horizontal, depending upon speed, viscosity and container radius. If the crank pin **12** is rotating in the direction of arrow A of FIG. **1**, the direction of tidal movement of the liquid **54** within the container is in the direction of arrow B. As will be obvious, sufficient centrifugal force will be applied to the liquid **54** to collect the same in a single body and separate the same from any gas phase present in the container, the gas occupying the region of the container inwardly of the body of liquid **54**. Thus, the separated gas may be withdrawn through gas conduit **32** in any suitable manner.

The valve **48** previously referred to is preferably a liquid sensing valve which opens in the presence of liquid **54** but which is closed at other times. Such a valve may sense the presence of the liquid or may be a valve that opens and closes in timed relation to rotation of the crank pin **12**. In any event, it is thus possible to withdraw only liquid **54** from the container each time the liquid passes over the port controlled by valve **48**. One liquid sensing embodiment of valve **48** is shown in FIG. **4**. Cylindrical opening **58** communicates with the inner volume of chamber **26** during all phases of operation of the present invention and also communicates with valve chamber **60** when valve disc **64** is no longer in contact with valve seating surface **62**. Chamber **60** in turn communicates with the interior of pipe nipple **50**. Valve disc **64** slidably engages the inner surface **68** of valve **48** by means of a plurality of intergral supports **66** which are spaced equally about its periphery. Disc **64** is normally held against valve seating surface **62** by compression spring **72**. The force exerted by spring **72** is adjusted by means of shims or substitution of springs such that valve disc **64** remains seated during all phases of operation of the present invention except when covered by liquid **54**. Valve **48** senses the presence of the liquid when the added pressure on valve disc **64** resulting from the operation of centrifugal force upon fluid overcomes the force exerted by spring **72** then opening the valve and allowing only the passage of fluid **54** out of container **26**. As the tidal movement of fluid **54** passes valve **48**, spring pressure causes valve disc **64** to reseat. The flexible conduits **46** and **52**, previously referred to, may lead to any desired external location and it will be obvious that the orbital movement of container **26** without complete rotation thereof permits continuous connection between the desired external locations and the interior of the container through flexible conduits without the necessity of providing any rotary seals and thus the connections between the various tubing and conduits may be permanently and fixedly sealed. The conduits **40** and **46** permit the introduction of liquid or gas and liquid mixture into the container by conducting the same to the space **42** wherein movement of the container in the manner described causes the introduced material to move radially outwardly under the influence of centrifugal forces until the liquid phase reaches the outer periphery of the container, as already described.

Obviously, inlet ports or outlet ports for either fluid phase may be positioned anywhere on the walls of the container other than the specific locations shown and described herein. It will be obvious that during introduction of liquid materials through the conduit **40** some splashing in the form of droplets will occur. The baffle means comprising plates **36** and **38** prevent those droplets from reaching the entry of the gas withdrawal conduit **32** but the space **56** permits ready access of separated gas to its withdrawal port.

While the foregoing description refers specifically to the separation of gas and liquid phases introduced into the container, obviously the apparatus is useful for other purposes. For example, liquids or other fluids may remain in contact with the heated wall **28** to thereby control its temperature. Such contact would be difficult to maintain under zero gravity conditions in a stationary container. The apparatus may also be employed for pumping the liquids from one location to another or for mass measurement thereof. As a further example of utility, the wall **28** could be maintained at low temperature by suitable refrigerating equipment and gases introduced into the container could thereby be condensed and the condensed liquid withdrawn in the manner described. In cases where the wall **28** is heated, the temperature thereof could be sufficient to evaporate the liquid in contact therewith, the vapors being continuously withdrawn through conduit **32** and the apparatus could thus function as a still even in a zero gravity environment.

In cases where it is desired that the movement of the body of liquid **54** within the container be absolutely uniform, it would be possible to maintain exact and precise constant orientation of the container by replacing the slot **22** and pin **24** arrangement shown with a second crank member having a throw equal to the crank **10** and rotatable in phase therewith. Thus, all movable parts of the apparatus would nutate in a directly circular path with the container always precisely oriented in a predetermined direction.

Reference herein to a circular orbital path or circular nutation is intended to include equivalent but not truly circular paths.

While a single specific embodiment of the invention has been shown and described herein, the same is merely illustrative of the principles involved and other forms may be resorted to within the scope of the appended claims.

I claim:

1. Apparatus for controlling fluids comprising:

base means;

a circular container having an outer peripheral wall;

drive means movable in an orbital path in a plane substantially parallel to the plane formed by the diameters of said circular wall including a rotating shaft, crank arm and crank pin;

means drivingly connecting said drive means to said container comprising a support plate fixedly attached to said container and journaled to said crank pin;

orienting means preventing rotation of said container due to the influence of said drive means, thereby causing said container to gyrate about said orbital path while remaining in substantially fixed orientation relative to said base means, comprising a stationary pin fixedly attached to said base means and an elongated slot in said support plate, generally radial to said crank pin, slidably engaging said stationary pin whereby any liquid in said circular container is forced against and moves tidally around the radial extremities of the inside of the outer peripheral wall of said container as a result of centrifugal force generated by the orbital motion of said container.

2. An apparatus as in claim **1** further including a plurality of fluid inlet and outlet ports and a plurality of flexible conduits fixedly communicating with said ports and extending outwardly therefrom for purposes of introducing a gas and liquid mixture into said container, removing gas and liquid separately therefrom, and subjecting said gas and liquid mixture to centrifugal forces without the use of rotary seals.

3. An apparatus as in claim **2** wherein baffle means are enclosed within said container and interposed between said gas removal port and those portions of the interior of said container which contain liquid to prevent liquid droplets from entering said gas outlet port.

4. An apparatus as in claim **2** wherein said liquid outlet port includes valve means whereby said liquid outlet port is opened only when said outlet port is covered by a liquid in said container.

* * * * *