(12) INTERNATIONAL APPLICATION PUBLISHED UNDER THE PATENT COOPERATION TREATY (PCT)

(19) World Intellectual Property Organization
International Bureau

(43) International Publication Date
08 November 2018 (08.11.2018)

WIPO | PCT

(10) International Publication Number
WO 2018/202777 A1

(51) International Patent Classification:
H04W 76/27 (2018.01) *H04W 76/15* (2018.01)

(21) International Application Number:
PCT/EP2018/061351

(22) International Filing Date:
03 May 2018 (03.05.2018)

(25) Filing Language: English

(26) Publication Language: English

(30) Priority Data:
201711015792 04 May 2017 (04.05.2017) IN

(71) Applicant: **NOKIA TECHNOLOGIES OY** [FI/FI]; Karaportti 3, 02610 Espoo (FI).

(72) Inventors: **SELVAGANAPATHY, Srinivasan**; M20, Royal Palm Apartments, II Cross, LBShastry Nagar, HAL Post, Bangalore 560117 (IN). **HENTTONEN, Tero**; Joupinkuja 4 A 5, 02760 Espoo (FI). **ALI, Amaanat**; Likusterikatu 1B 44, 02250 Espoo (FI).

(81) Designated States *(unless otherwise indicated, for every kind of national protection available)*: AE, AG, AL, AM, AO, AT, AU, AZ, BA, BB, BG, BH, BN, BR, BW, BY, BZ, CA, CH, CL, CN, CO, CR, CU, CZ, DE, DJ, DK, DM, DO, DZ, EC, EE, EG, ES, FI, GB, GD, GE, GH, GM, GT, HN, HR, HU, ID, IL, IN, IR, IS, JO, JP, KE, KG, KH, KN, KP, KR, KW, KZ, LA, LC, LK, LR, LS, LU, LY, MA, MD, ME, MG, MK, MN, MW, MX, MY, MZ, NA, NG, NI, NO, NZ, OM, PA, PE, PG, PH, PL, PT, QA, RO, RS, RU, RW, SA, SC, SD, SE, SG, SK, SL, SM, ST, SV, SY, TH, TJ, TM, TN, TR, TT, TZ, UA, UG, US, UZ, VC, VN, ZA, ZM, ZW.

(84) Designated States *(unless otherwise indicated, for every kind of regional protection available)*: ARIPO (BW, GH, GM, KE, LR, LS, MW, MZ, NA, RW, SD, SL, ST, SZ, TZ, UG, ZM, ZW), Eurasian (AM, AZ, BY, KG, KZ, RU, TJ, TM), European (AL, AT, BE, BG, CH, CY, CZ, DE, DK, EE, ES, FI, FR, GB, GR, HR, HU, IE, IS, IT, LT, LU, LV, MC, MK, MT, NL, NO, PL, PT, RO, RS, SE, SI, SK, SM, TR), OAPI (BF, BJ, CF, CG, CI, CM, GA, GN, GQ, GW, KM, ML, MR, NE, SN, TD, TG).

(54) **Title:** COMMUNICATION APPARATUS IN DUAL CONNECTIVITY, METHOD AND COMPUTER PROGRAM

FIG 8

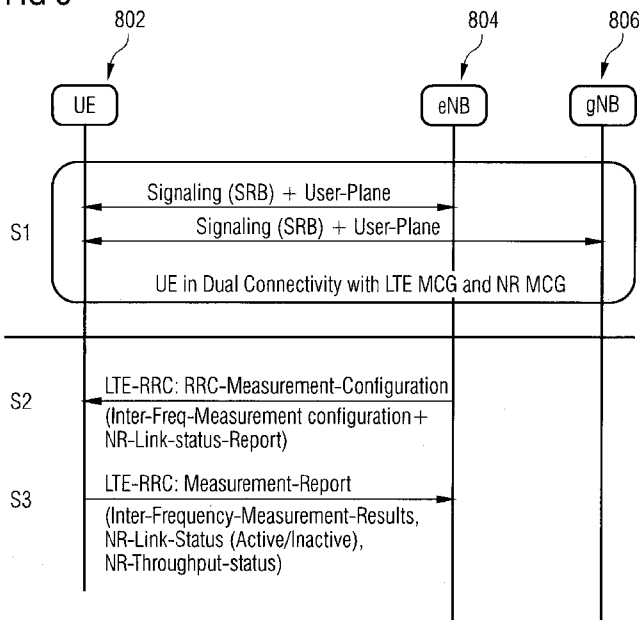

(57) **Abstract:** A method comprising: receiving, at a user equipment in dual connectivity with a first base station and a second base station, a request from the first base station for information of a link-status of the user equipment with the second base station, the first base station comprising a long-term evolution base station and the second base station comprising a new radio base station; and in response to receiving the request, sending link-status information of the user equipment with the second base station to the first base station.

WO 2018/202777 A1

[Continued on next page]

Published:
— *with international search report (Art. 21(3))*

COMMUNICATION APPARATUS IN DUAL CONNECTIVITY, METHOD AND COMPUTER PROGRAM

Description

Title

Communication apparatus, method and computer program

Field

This disclosure relates to communications, and more particularly to communication involving user equipment mobility in a wireless communication system.

Background

A communication system can be seen as a facility that enables communication between two or more devices such as user terminals, machine-like terminals, base stations and/or other nodes by providing communication channels for carrying information between the communicating devices. A communication system can be provided for example by means of a communication network and one or more compatible communication devices. The communication may comprise, for example, communication of data for carrying data for voice, electronic mail (email), text message, multimedia and/or content data communications and so on. Non-limiting examples of services provided include two-way or multi-way calls, data communication or multimedia services and access to a data network system, such as the Internet.

In a wireless system at least a part of communications occurs over wireless interfaces. Examples of wireless systems include public land mobile networks (PLMN), satellite based communication systems and different wireless local networks, for example wireless local area networks (WLAN). A local area wireless networking technology allowing devices to connect to a data network is known by the tradename WiFi (or Wi-Fi). WiFi is often used synonymously with WLAN. The wireless systems can be divided into cells, and are therefore often referred to as cellular systems. A base station provides at least one cell.

A user can access a communication system by means of an appropriate communication device or terminal capable of communicating with a base station. Hence nodes like base stations are often referred to as access points. A communication device of a user is often referred to as user equipment (UE). A communication device is provided with an appropriate signal receiving and transmitting apparatus for enabling communications, for example enabling communications with the base station and/or communications directly with other user

devices. The communication device can communicate on appropriate channels, e.g. listen to a channel on which a station, for example a base station of a cell, transmits.

A communication system and associated devices typically operate in accordance with a given standard or specification which sets out what the various entities associated with the system are permitted to do and how that should be achieved. Communication protocols and/or parameters which shall be used for the connection are also typically defined. Non-limiting examples of standardised radio access technologies include GSM (Global System for Mobile), EDGE (Enhanced Data for GSM Evolution) Radio Access Networks (GERAN), Universal Terrestrial Radio Access Networks (UTRAN) and evolved UTRAN (E-UTRAN). An example communication system architecture is the long-term evolution (LTE) of the Universal Mobile Telecommunications System (UMTS) radio-access technology. The LTE is standardized by the third Generation Partnership Project (3GPP). The LTE employs the Evolved Universal Terrestrial Radio Access Network (E-UTRAN) access and a further development thereof which is sometimes referred to as LTE Advanced (LTE-A).

Since introduction of fourth generation (4G) services increasing interest has been paid to the next, or fifth generation (5G) standard. 5G may also be referred to as a New Radio (NR) network. Standardization of 5G or New Radio networks is an on-going study item. A goal of these studies includes the following three features: enhanced mobile broadband (eMBB), ultra reliable low latency communication (URLLC) and massive machine type communication (mMTC).

Statement of invention

According to a first aspect, there is provided a method comprising: receiving, at a user equipment in dual connectivity with a first base station and a second base station, a request from the first base station for information of a link-status of the user equipment with the second base station, the first base station comprising a long-term evolution base station and the second base station comprising a new radio base station; and in response to receiving the request, sending link-status information of the user equipment with the second base station to the first base station.

In one embodiment, the link-status information sent to the first base station comprises an indication of whether the link is active or inactive.

In one embodiment, when the link is active, the user equipment provides to the first base station information of a throughput status of the link, in response to the request.

In one embodiment, the throughput status comprises an estimate of a data quantity capability of the link.

In one embodiment, the request comprises an inter-frequency measurement configuration, in response to which the user equipment provides an inter-frequency measurement report.
In one embodiment, the method further comprises establishing dual connectivity with the first base station and a third base station, the third base station comprising a long-term evolution base station.

In one embodiment, the method further comprises maintaining a signalling radio bearer with the second base station.

According to some embodiments the first base station comprises a master base station and the second base station comprises a secondary base station.

According to a second aspect, there is provided a method comprising: sending, from a first base station to a user equipment in dual connectivity with the first base station and a second base station, a request for information of a link-status of the user equipment with the second base station, the first base station comprising a long-term evolution base station and the second base station comprising a new radio base station; and receiving at the first base station link-status information of the user equipment with the second base station.

In one embodiment, the link-status information comprises an indication of whether the link is active or inactive.

In one embodiment, when the link is active the method comprises receiving information of a throughput status of the link.

In one embodiment, the throughput status comprises an estimate of a data quantity capability of the link.

In one embodiment, when the link is inactive the method comprises determining whether to release the link.

In one embodiment, the request comprises an inter-frequency measurement configuration, and the determining whether to release the link is based upon an inter-frequency measurement report received from the user equipment.

In one embodiment, the first base station comprises a master base station and the second base station comprises a secondary base station.

According to a third aspect, there is provided a method comprising: receiving, at a user equipment in dual connectivity with a first base station and a second base station, a request from the second base station for the user equipment to send cell update information to the first base station, the first base station comprising a long-term evolution base station and the second base station comprising a new radio base station; and sending cell update information to the first base station.

In one embodiment, the cell update information comprising a cell change event of the user equipment from a previous cell to a new cell.

In one embodiment, the cell update information comprising an identifier of the new cell.

In one embodiment, the identifier comprises an evolved cell global identifier.

In one embodiment, the method comprises the user equipment sending interference measurements of the new cell to the first base station.

In one embodiment, the request comprises reporting configuration information for the user equipment.

In one embodiment, the reporting configuration information instructs the user equipment to report information using one of: radio resource control messaging; inband signalling.

In one embodiment, the method further comprises establishing dual connectivity with the first base station and a third base station, the third base station comprising a long-term evolution base station.

In one embodiment, the method further comprises maintaining a signalling radio bearer with the second base station.

In one embodiment, the radio resource control messaging comprises long-term evolution radio resource control messaging.

In one embodiment, the inband signalling comprises use of radio link control/media access control layer control elements.

In one embodiment, the configuration information comprising information to cause the user equipment to provide signal quality level information of a previous cell and signal quality information of a new cell.

According to a fourth aspect, there is provided a method comprising: sending, to a user equipment in dual connectivity with a first base station and a second base station, a request from the second base station for the user equipment to send cell update information to the first base station, the first base station comprising a long-term evolution base station and the second base station comprising a new radio base station.

In one embodiment, the request comprises reporting configuration information for the user equipment.

In one embodiment, the configuration information instructs the user equipment to report information using one of: radio resource control messaging; inband signalling.

In one embodiment, the radio resource control messaging comprises long-term evolution radio resource control messaging.

In one embodiment, the inband signalling comprises use of radio link control/media access control layer control elements.

In one embodiment, the configuration information comprising trigger condition information, configured to trigger a cell change by the user equipment.

In one embodiment, the trigger condition information comprises an interference threshold.

In one embodiment, the configuration information comprising information to cause the user equipment to provide signal quality level information of a previous cell and signal quality information of a new cell.

According to a fifth aspect, there is provided a computer program product for a computer, comprising software code portions for performing the steps of any of the first to fourth aspects, when the program is run on the computer.

According to a sixth aspect, there is provided an apparatus comprising: at least one processor and at least one memory including computer program code, the at least one memory and the computer program code configured to, with the at least one processor, cause the apparatus at least to: receive, at a user equipment in dual connectivity with a first base station and a second base station, a request from the first base station for information of a link-status of the user equipment with the second base station, the first base station comprising a long-term evolution base station and the second base station comprising a new radio base station; and in response to receiving the request, send link-status information of the user equipment with the second base station to the first base station.

According to a seventh aspect, there is provided an apparatus comprising: at least one processor and at least one memory including computer program code, the at least one memory and the computer program code configured to, with the at least one processor, cause the apparatus at least to: send, from a first base station to a user equipment in dual connectivity with the first base station and a second base station, a request for information of a link-status of the user equipment with the second base station, the first base station comprising a long-term evolution base station and the second base station comprising a new radio base station; and receive at the first base station link-status information of the user equipment with the second base station.

According to eighth aspect, there is provided an apparatus comprising: at least one processor and at least one memory including computer program code, the at least one memory and the computer program code configured to, with the at least one processor, cause the apparatus at least to: receive, at a user equipment in dual connectivity with a first base station and a second base station, a request from the second base station for the user equipment to send cell update information to the first base station, the first base station comprising a long-term evolution base station and the second base station comprising a new radio base station; and send cell update information to the first base station.

According to an ninth aspect, there is provided an apparatus comprising: at least one processor and at least one memory including computer program code, the at least one memory and the computer program code configured to, with the at least one processor, cause the apparatus at least to: send, to a user equipment in dual connectivity with a first base station and a second base station, a request from the second base station for the user equipment to send cell update information to the first base station, the first base station comprising a long-term evolution base station and the second base station comprising a new radio base station.

According to a tenth aspect, there is provided an apparatus comprising: means for receiving, at a user equipment in dual connectivity with a first base station and a second base station, a request from the first base station for information of a link-status of the user equipment with the second base station, the first base station comprising a long-term evolution base station and the second base station comprising a new radio base station; and mean for in response to receiving the request, sending link-status information of the user equipment with the second base station to the first base station.

According to an eleventh aspect, there is provided an apparatus comprising: means for sending, from a first base station to a user equipment in dual connectivity with the first base station and a second base station, a request for information of a link-status of the user equipment with the second base station, the first base station comprising a long-term evolution base station and the second base station comprising a new radio base station; and means for receiving at the first base station link-status information of the user equipment with the second base station.

According to twelfth aspect, there is provided an apparatus comprising: means for receiving, at a user equipment in dual connectivity with a first base station and a second base station, a request from the second base station for the user equipment to send cell update information to the first base station, the first base station comprising a long-term evolution base station and the second base station comprising a new radio base station; and means for sending cell update information to the first base station.

According to an thirteenth aspect, there is provided an apparatus comprising: means for sending, to a user equipment in dual connectivity with a first base station and a second base station, a request from the second base station for the user equipment to send cell update

information to the first base station, the first base station comprising a long-term evolution base station and the second base station comprising a new radio base station.

Brief description of Figures

The invention will now be described in further detail, by way of example only, with reference to the following examples and accompanying drawings, in which:

Figure 1 shows a schematic example of a wireless communication system where the invention may be implemented;

Figure 2 shows an example of a communication device;

Figure 3 shows an example of a control apparatus;

Figure 4 is an example of a split bearer;

Figures 5A and 5B are example LTE-NR deployment options;

Figure 6 is a flow chart of a method according to an example;

Figure 7 is a flow chart of a method according to an example;

Figure 8 is a signalling diagram according to an example;

Figure 9 is a signalling diagram according to an example;

Figure 10 is a flow chart of a method according to an example;

Figure 11 is a flow chart of a method according to an example;

Figure 12 is a flow chart of a method according to an example; and

Figure 13 is a flow chart of a method according to an example.

Detailed description

Before explaining in detail the examples, certain general principles of a wireless communication system and mobile communication devices are briefly explained with reference to Figures 1 to 2 to assist in understanding the technology underlying the described examples.

In a wireless communication system 100, such as that shown in Figure 1, wireless communication devices, for example, user equipment (UE) or MTC devices 102, 104, 105 are provided wireless access via at least one base station or similar wireless transmitting and/or receiving wireless infrastructure node or point. Such a node can be, for example, a base station or an eNodeB (eNB), or in a 5G system a Next Generation NodeB (gNB), or other wireless infrastructure node. These nodes will be generally referred to as base stations. Base stations are typically controlled by at least one appropriate controller apparatus, so as to enable operation thereof and management of mobile communication devices in communication with the base stations. The controller apparatus may be located in a radio

access network (e.g. wireless communication system 100) or in a core network (CN) (not shown) and may be implemented as one central apparatus or its functionality may be distributed over several apparatus. The controller apparatus may be part of the base station and/or provided by a separate entity such as a Radio Network Controller. In Figure 1 control apparatus 108 and 109 are shown to control the respective macro level base stations 106 and 107. In some systems, the control apparatus may additionally or alternatively be provided in a radio network controller. Other examples of radio access system comprise those provided by base stations of systems that are based on technologies such as 5G or new radio, wireless local area network (WLAN) and/or WiMax (Worldwide Interoperability for Microwave Access). A base station can provide coverage for an entire cell or similar radio service area.

In Figure 1 base stations 106 and 107 are shown as connected to a wider communications network 113 via gateway 112. A further gateway function may be provided to connect to another network.

The smaller base stations 116, 118 and 120 may also be connected to the network 113, for example by a separate gateway function and/or via the controllers of the macro level stations. The base stations 116, 118 and 120 may be pico or femto level base stations or the like. In the example, stations 116 and 118 are connected via a gateway 111 whilst station 120 connects via the controller apparatus 108. In some embodiments, the smaller stations may not be provided.

A possible wireless communication device will now be described in more detail with reference to Figure 2 showing a schematic, partially sectioned view of a communication device 200. Such a communication device is often referred to as user equipment (UE) or terminal. An appropriate mobile communication device may be provided by any device capable of sending and receiving radio signals. Non-limiting examples comprise a mobile station (MS) or mobile device such as a mobile phone or what is known as a 'smart phone', a computer provided with a wireless interface card or other wireless interface facility (e.g., USB dongle), personal data assistant (PDA) or a tablet provided with wireless communication capabilities, or any combinations of these or the like. A mobile communication device may provide, for example, communication of data for carrying communications such as voice, electronic mail (email), text message, multimedia and so on. Users may thus be offered and provided numerous services via their communication devices. Non-limiting examples of these services comprise two-way or multi-way calls, data communication or multimedia services or simply an access to a data communications network system, such as the Internet. Users may also be provided broadcast or multicast data. Non-limiting examples of the content comprise downloads, television and radio programs, videos, advertisements, various alerts and other information.

A wireless communication device may be for example a mobile device, that is, a device not fixed to a particular location, or it may be a stationary device. The wireless device may need human interaction for communication, or may not need human interaction for communication. In the present teachings the terms UE or "user" are used to refer to any type of wireless communication device.

The wireless device 200 may receive signals over an air or radio interface 207 via appropriate apparatus for receiving and may transmit signals via appropriate apparatus for transmitting radio signals. In Figure 2 transceiver apparatus is designated schematically by block 206. The transceiver apparatus 206 may be provided for example by means of a radio part and associated antenna arrangement. The antenna arrangement may be arranged internally or externally to the wireless device.

A wireless device is typically provided with at least one data processing entity 201, at least one memory 202 and other possible components 203 for use in software and hardware aided execution of tasks it is designed to perform, including control of access to and communications with access systems and other communication devices. The data processing, storage and other relevant control apparatus can be provided on an appropriate circuit board and/or in chipsets. This feature is denoted by reference 204. The user may control the operation of the wireless device by means of a suitable user interface such as key pad 205, voice commands, touch sensitive screen or pad, combinations thereof or the like. A display 208, a speaker and a microphone can be also provided. Furthermore, a wireless communication device may comprise appropriate connectors (either wired or wireless) to other devices and/or for connecting external accessories, for example hands-free equipment, thereto. The communication devices 102, 104, 105 may access the communication system based on various access techniques.

Figure 3 shows an example of a control apparatus for a communication system, for example to be coupled to and/or for controlling a station of an access system, such as a RAN node, e.g. a base station, gNB, a central unit of a cloud architecture or a node of a core network such as an MME or S-GW, a scheduling entity such as a spectrum management entity, or a server or host. The control apparatus may be integrated with or external to a node or module of a core network or RAN. In some embodiments, base stations comprise a separate control apparatus unit or module. In other embodiments, the control apparatus can be another network element such as a radio network controller or a spectrum controller. In some embodiments, each base station may have such a control apparatus as well as a control apparatus being provided in a radio network controller. The control apparatus 300 can be arranged to provide control on communications in the service area of the system. The control apparatus 300 comprises at least one memory 301, at least one data processing unit 302, 303

and an input/output interface 304. Via the interface the control apparatus can be coupled to a receiver and a transmitter of the base station. The receiver and/or the transmitter may be implemented as a radio front end or a remote radio head. For example the control apparatus 300 or processor 201 can be configured to execute an appropriate software code to provide the control functions.

To allow early deployment of NR, NR interworking with the existing LTE network has been studied. The initial deployment option for New Radio(NR) is expected to be a non-standalone (NSA) case, where the NR nodes provide services along with LTE to a user based on the existing LTE dual connectivity feature, which allows UEs to receive data simultaneously from different eNBs in order to boost UE performance. In this deployment option, the NR node will not have direct connectivity to the core network for signalling, but only provide user plane connectivity towards the UE. The UE is expected to be a multimode device with its radio resource control (RRC) and S1 layer being anchored at the LTE nodes, with some radio bearers possibly also being routed directly from the core network (CN) towards the NR gNB in a similar manner as secondary cell group (SCG) bearers with LTE DC (dual connectivity).

Figure 4 shows an example radio protocol architecture for LTE NR Interworking option for non-standalone deployments. Figure 4 shows an LTE eNB 402 and a NR gNB 404. A split bearer 406 is split at the packet data convergence protocol (PDCP) of the LTE eNB 402, such that the bearer is split between LTE eNB 402 and gNB 404. Deployment options for this situation have been referred to as options 3 and 3A in the 3GPP document RP-161266, as shown in Figures 5A and 5B. Figure 5B shows a 1A interface between the evolved packet core (EPC) and the NR gNB.

For non-standalone deployments of NR cells, the LTE-NR interworking architecture proposes to use a direct RRC connection between SgNB (secondary gNB) and UE through a signaling radio bearer mapped to NR-SCG (secondary cell group). This direct connection allows the SgNB to send the RRC messages directly to UE, at least for cases where the NR RRC configuration does not have any dependencies for LTE Radio resource management. This would allow independent development of NR related RRC procedures without impacting LTE specifications.

One architecture option proposes use of SCG Split bearer, which is a combination of SCG bearer and a split bearer: An SCG bearer is transmitted via NR SCG or LTE-MCG (master cell group) in a similar manner as a split bearer in LTE DC can be transmitted via LTE MCG or LTE SCG. This option increases the throughput of SCG split bearer and also has an advantage of reliability for the transmission over MCG cell which is expected to have better coverage performance. This option can also be extended for the SCG-signaling radio bearer

(SCG-SRB). With SCG-SRB configured as a split bearer, the NR RRC messages will also have RRC diversity gain.

With the use of SCG-SRB split bearer, the UE measurements and mobility across NR cells can be handled by SgNB without any impact to LTE eNB. Even radio link failures of SCG can be communicated to the SgNB transparently via the MeNB-part of SCG-SRB split bearer.

It is also proposed that in order to allow faster connectivity back to NR cells, SgNB maintains the SCG-SRB -split bearers even after release of SCG via RRC signaling (which is different from S-RLF (secondary radio link failure) handling where SCG release meant releasing the SeNB resources completely from the UE perspective). Under this assumption, the SgNB will continue to receive the NR measurements from the UE to find the next suitable NR cell to establish the SCG.

With use of SCG-SRB split bearer configuration for LTE-NR interworking the NR mobility /NR-SCG-Release/NR S-RLF events are directly handled by SgNB. The MeNB is informed only if there is resource re-allocation required during mobility or if the MeNB connection is affected by the SCG configuration action (e.g. due to RF retuning).

Existing LTE deployments will have LTE small-cells. The UE will establish dual connectivity with the small-cells whenever it is detected. When NR cells are deployed along with the existing LTE small-cells, it is possible that a UE moves out from an NR cell and will enter into LTE small cell coverage before entering into another NR cell. In such a case, the LTE-NR dual connectivity will have to be released and LTE-LTE dual connectivity needs to be established.

The awareness of NR-SCG status along with current condition of throughput is needed at LTE eNB when it processes the Inter frequency measurements for LTE-DC setup.

Therefore NR-SCG status is required at LTE eNB at the time of processing the LTE Inter frequency measurements for LTE-DC addition.

With small cell deployments, actual UE mobility can be tracked based on the small-cell to which it is currently connected. When the UE is in dual connectivity with NR cells, such tracking is possible based on mobility events between NR cells. If the EPC requires such tracking and activation /deactivation of some services for UE entering specific cells, the awareness of latest NR serving cell or report on when UE entering into specific cell/cell range is required. When NR layer mobility is completely abstracted from LTE node (assuming the key change is not mandatory for Intra-sgNB SCG change and sgNB can decide to change the S-KeNB (eNB key) in a flexibile manner), the cell change events needs to be known by MeNB and EPC for specific use cases.

Therefore with NR layer mobility directly handled by SgNB, for some use cases MeNB needs to know the latest SCG or UE entering into specific NR-cell areas.

The mechanism of direct SRB (signalling radio bearer) between UE and SgNB and handling of NR measurements and mobility by SgNB in LTE-NR dual connectivity is thus a new proposal for LTE-NR interworking. The present disclosure is discussed in this context.

Currently, existing measurement reporting allows eNB to specify when and what the UE reports according to existing radio conditions. The measurement reports may contain information on serving and neighbour cells, and can be requested to be indicated either periodically (i.e. always within certain intervals) or in an event-based manner, i.e. when the radio conditions fulfill a configured event (in which case the reports can be sent e.g. once or periodically until the event is no longer valid).

As will be discussed in more detail below, it is proposed that a UE can be requested to indicate a status of an NR link within existing LTE measurement reports. For example the UE can indicate a link activity status ((ACTIVE/INACTIVE) according to pre-determined/configured conditions. For example the status may be ACTIVE when data has been sent during the last n ms, otherwise INACTIVE. The status information may be sent along with other information on the link performance (e.g. throughput, measurement results, Qin/Qout status etc.) The UE may also indicate cell change events at SgNB, for example wUE enters/exits certain geographical area, tracking area or cell group.

There will now be discussed some examples for LTE –inter frequency handling when LTE-NR dual connectivity is configured.

Referring to Figure 6, at S1 the UE establishes dual connectivity between MeNB and SgNB (i.e. between an LTE base station and an NR base station). The dual connectivity configuration consists of the UE having some SCG Split bearers configured at SgNB. The SCG-SRB bearer is also configured with split bearer option.

At S2 the LTE MeNB configures LTE Inter-frequency measurements. In some examples this is with event based or periodic reporting, to enable mobility at LTE layer.

At S3 the UE leaves the NR cell coverage. However the NR-SgNB context is not released. Instead, the SgNB uses the MeNB-path of the configured SCG-Split bearers and also for SCG-SRB.

At S4 the UE reports LTE-Inter frequency measurements to the MeNB. Along with the measurements it also provides information comprising the current status of the NR link i.e. NR-SCG (e.g. whether it is active or inactive).

If the NR-SCG is not active, then the method proceeds to S5. On reception of LTE-Inter frequency measurements with NR-SCG status as INACTIVE, the MeNB can decide to release the NR-SCG. This may also comprise establishing LTE-LTE dual connectivity with the “best

cell" reported from the measurements. While releasing the NR-SCG, the SCG-SRB can still be kept active via the MeNB-path. This may allow the NR measurements handled by NR sgNB, thereby reducing the NR related measurement processing at LTE node.

If on the other hand the NR-SCG is active, then the method proceeds to S6. At S6 the UE reports NR-SCG status indicates ACTIVE. The UE may also report the throughput possible via NR-SCG along with this status.

The method then proceeds to S7. At S7 the LTE MeNB decides whether to establish the LTE-DC depending on the throughput status reported, and the loading condition of the target-cell derived from X2 loading status. If the throughput condition at NR-SCG is better than the throughput condition at the new call to which LTE-DC is to be established, then inter-frequency measurements are dropped and no action is taken. If the throughput condition estimate for the new cell is better the throughput condition at NR-SCG, the MeNB initiates release of NR-SCG and sets-up LTE-SCG.

To enable the NR-cell change to LTE-MeNB, the following sets out some changes that may be required in the SgNB-Addition procedure, and subsequent measurement configurations. Referring to Figure 7, at S1 the MeNB informs the SgNB during SgNB addition to configure reporting of NR mobility to MeNB. At S2, the SgNB configures the NR mobility reporting to UE as part of LTE-RRC Reconfiguration message. The reporting can indicate whether the cell-change event is to be reported as a separate RRC message, or the cell change information can be included in the RLC or MAC control elements when the UE sends the SCG-SRB payload via MeNB. The SgNB can also configure event-based reporting to MeNB such as a UE entering into specific regions. In this case the reporting may be an LTE-RRC message. The report may include additional radio environment information at the time of cell change, such as receive-level at new-cell and old-cell.

Even though the NR-Cell change event is known to SgNB and it can inform the same via Xx interface, the proposed mechanism allows the report to be extended to include additional information about the radio environment which is only possible if UE reports the same.

Some examples are now further explained with respect to Figures 8 and 9, which are signalling diagrams showing communication between a UE 802, an eNB 804 and a gNB 806. In these examples the UE is configurd with dual connectivity. An LTE base station acts as Master eNB and a NR base station acts as secondary gNB. Furthermore, there is a dedicated signaling bearer with diversity at SeNB for direct signaling with UE, in addition to the LTE RRC signaling from MeNB. NR layer measurements and mobility are handled between NR-RRC at UE and NR-RRC at SgNB.

The signalling diagram in Figure 8 shows a method where the master node (eNB 804) is configured to request reporting of status of NR Secondary cell group along with throughput condition from UE, whenever the Inter-Frequency measurements are sent to Master node. The status indicates whether the NR Secondary cell group is active or not, and if active the estimated throughput possible via the secondary cell group.

Referring to Figure 8, at S1 the UE 802 is shown in dual connectivity with eNB 804 and gNB 806.

At S2, the eNB 804 sends to UE 802 an inter-frequency measurement configuration. The eNB 804 also sends an NR link status report request.

At step S3 the UE 802 responds to the eNB 804. In response to the measurement configuration the UE sends inter-frequency measurement results. In response to the NR link status report request the UE sends NR-link status information. In some examples this includes information of whether the NR link is active or inactive. If the link is still active then further information provided may comprise NR-throughput status information, such as the estimated throughput possible via the gNB 806 (i.e. the secondary cell group).

The signalling diagram in Figure 9 shows a method at a secondary node (e.g. gNB) to configure the reporting of cell change events at NR layer to LTE-RRC. The configuration includes configuration of reporting i.e. whether to use direct LTE-RRC signaling or to use RLC/MAC layer control elements when the SCG-SRB message is sent via the LTE-path. The configuration may also include the triggering condition for entering or exiting some region in terms of tracking area or cell-groups. The configuration may also include additional reporting signal levels of old and new cells to assist the post-processing of the events for some self-optimisation functions.

Referring to Figure 9, at S1 the UE 802 is shown in dual connectivity with eNB 804 and gNB 806.

At S2, the gNB 806 sends to UE 802 a measurement configuration, for configuring measurement reporting at the UE.

If the UE is configured with direct LTE-RRC signalling reporting, then at S3 the UE reports new-cell ECGI (evolved cell global identifier) and receive-level measurements at the UE using the LTE-RRC messaging.

If the UE is configured with inband signalling reporting (e.g. using RLC/MAC layer control elements when the SCG-SRB message is sent via the LTE-path), then as shown at S4 the

UE reports cell change indicator and new cell ECGI and the receive-level measurements, using that reporting configuration.

The following description refers to the figures 10 to 13, which illustrate methods which may be performed according to embodiments. In these embodiments, the user equipment is in dual connectivity with a first base station and a second base station. The first base station is an LTE base station, whereas the second base station is a new radio base station.

Reference is made to figure 10, which shows a method which may be performed in the user equipment according to embodiments. In some embodiments, one or more of these method steps may be omitted.

At S1010, the user equipment receives a request from the first base station for link status information.

At S1020, in response to this request, the user equipment sends to the first base station, the requested link status information.

At S1030, the user equipment then establishes dual connectivity with the first base station and a third base station, which is also an LTE base station. The user equipment may perform this step in dependence on the link status information. The second base station is released from dual connectivity with the user equipment. However, the SCG-SRB between the user equipment and the second base station may be maintained.

Reference is made to figure 11, which shows a method which may be performed in the first base station according to embodiments. In some embodiments, one or more of these method steps may be omitted.

At S1110, the first base station sends a request for link status information to the user equipment.

At S1120, in response to this request, the first base station receives the requested link status information from the user equipment.

At S1130, the first base station initiates release of the user equipment from the cell of the second base station, and establishes dual connectivity for the user equipment with a third base station as well as the first base station. The first base station may perform this step in dependence on the received link status information. The third base station is also an LTE base station. The SCG-SRB between the user equipment and the second base station may be maintained.

Reference is made to figure 12, which shows a method which may be performed in the user equipment according to embodiments. In some embodiments, one or more of these method steps may be omitted.

At S1210, the user equipment receives a request from the second base station for the user equipment to send cell update information to the first base station

At S1220, in response to this request, the user equipment sends to the first base station, the requested cell update information

At S1230, the user equipment then establishes dual connectivity with the first base station and a third base station, which is also an LTE base station. The user equipment may perform this step in dependence on the cell update information. The second base station is released from the dual connectivity. However, the SCG-SRB between the user equipment and the second base station may be maintained.

Reference is made to figure 13, which shows a method which may be performed in the second base station according to embodiments. In some embodiments, one or more of these method steps may be omitted.

At S1310, the second base station sends a request to user equipment to send cell update information to the first base station

At S1320, the second base station is released from the user equipment and is no longer in dual connectivity with the user equipment. However, the SCG-SRB between the user equipment and the second base station may be maintained.

Maintaining the the SCG-SRB between the user equipment and the second base station, allows independent NR measurement processing by NR node when LTE-DC is active for further switch back to LTE-DC to LTE-NR.

Thus it may be considered that this disclosure of LTE-NR interworking builds upon LTE dual connectivity. The new radio related RRM activities such as mobility, reconfigurations etc. are, where possible, handled by NR node (gNB) to allow independent handling and also to have lower impact on LTE-RRC to handle the NR related radio aspects. For this purpose signaling SRB for NR-SCG may also be configured in addition to SRB at MeNB for LTE-RRC. To enable better interworking of mobility at LTE layer and NR layer some co-ordination may be implemented making tight coupling at LTE-RRC. Thus the proposed approach may allow independent working of NR-RRC with minimum information updates to other layers, and without necessarily requiring an LTE node to interpret NR related messages/parameters.

In general, the various embodiments may be implemented in hardware or special purpose circuits, software, logic or any combination thereof. Some aspects of the invention may be implemented in hardware, while other aspects may be implemented in firmware or software which may be executed by a controller, microprocessor or other computing device, although the invention is not limited thereto. While various aspects of the invention may be illustrated and described as block diagrams, flow charts, or using some other pictorial representation, it is well understood that these blocks, apparatus, systems, techniques or methods described herein may be implemented in, as non-limiting examples, hardware, software, firmware, special purpose circuits or logic, general purpose hardware or controller or other computing devices, or some combination thereof.

The embodiments of this invention may be implemented by computer software executable by a data processor of the mobile device, such as in the processor entity, or by hardware, or by a combination of software and hardware. Computer software or program, also called program product, including software routines, applets and/or macros, may be stored in any apparatus-readable data storage medium and they comprise program instructions to perform particular tasks. A computer program product may comprise one or more computer-executable components which, when the program is run, are configured to carry out embodiments. The one or more computer-executable components may be at least one software code or portions of it.

Further in this regard it should be noted that any blocks of the logic flow as in the Figures may represent program steps, or interconnected logic circuits, blocks and functions, or a combination of program steps and logic circuits, blocks and functions. The software may be stored on such physical media as memory chips, or memory blocks implemented within the processor, magnetic media such as hard disk or floppy disks, and optical media such as for example DVD and the data variants thereof, CD. The physical media is a non-transitory media.

The memory may be of any type suitable to the local technical environment and may be implemented using any suitable data storage technology, such as semiconductor based memory devices, magnetic memory devices and systems, optical memory devices and systems, fixed memory and removable memory. The data processors may be of any type suitable to the local technical environment, and may comprise one or more of general purpose computers, special purpose computers, microprocessors, digital signal processors (DSPs), application specific integrated circuits (ASIC), FPGA, gate level circuits and processors based on multi core processor architecture, as non-limiting examples.

Embodiments of the inventions may be practiced in various components such as integrated circuit modules. The design of integrated circuits is by and large a highly automated

process. Complex and powerful software tools are available for converting a logic level design into a semiconductor circuit design ready to be etched and formed on a semiconductor substrate.

The foregoing description has provided by way of non-limiting examples a full and informative description of the exemplary embodiment of this invention. However, various modifications and adaptations may become apparent to those skilled in the relevant arts in view of the foregoing description, when read in conjunction with the accompanying drawings and the appended claims. However, all such and similar modifications of the teachings of this invention will still fall within the scope of this invention as defined in the appended claims. Indeed there is a further embodiment comprising a combination of one or more embodiments with any of the other embodiments previously discussed.

Claims

1. A method comprising:

receiving, at a user equipment in dual connectivity with a first base station and a second base station, a request from the first base station for information of a link-status of the user equipment with the second base station, the first base station comprising a long-term evolution base station and the second base station comprising a new radio base station; and

in response to receiving the request, sending link-status information of the user equipment with the second base station to the first base station.

2. A method as set forth in claim 1, wherein the link-status information sent to the first base station comprises an indication of whether the link is active or inactive.

3. A method as set forth in claim 2, wherein when the link is active the user equipment provides to the first base station information of a throughput status of the link, in response to the request.

4. A method as set forth in claim According to some embodiments, the throughput status comprises an estimate of a data quantity capability of the link.

5. A method as set forth in any preceding claim, wherein the request comprises an inter-frequency measurement configuration, in response to which the user equipment provides an inter-frequency measurement report.

6. A method as set forth in any preceding claim, further comprising establishing dual connectivity with the first base station and a third base station, the third base station comprising a long-term evolution base station.

7. A method as set forth in claim 6, further comprising maintaining a signalling radio bearer with the second base station.

8. A method comprising:

sending, from a first base station to a user equipment in dual connectivity with the first base station and a second base station, a request for information of a link-status of the user equipment with the second base station, the first base station comprising a long-term evolution base station and the second base station comprising a new radio base station;

receiving at the first base station link-status information of the user equipment with the second base station.

9. A method according to claim 8, wherein the link-status information comprises an indication of whether the link is active or inactive.

10. A method according to claim 9, wherein when the link is active the method comprises receiving information of a throughput status of the link.

11. A method according to claim 9, wherein when the link is inactive the method comprises determining whether to release the link.

12. A method according to claim 11, wherein the request comprises an inter-frequency measurement configuration, and the determining whether to release the link is based upon an inter-frequency measurement report received from the user equipment.

13. A method according to any of claims 8 to 12, wherein the first base station comprises a master base station and the second base station comprises a secondary base station.

14. A method comprising:

receiving, at a user equipment in dual connectivity with a first base station and a second base station, a request from the second base station for the user equipment to send cell update information to the first base station, the first base station comprising a long-term evolution base station and the second base station comprising a new radio base station;

sending cell update information to the first base station.

15. A method according to claim 14, the cell update information comprising a cell change event of the user equipment from a previous cell to a new cell.

16. A method according to claim 14 or claim 15, wherein the request comprises reporting configuration information for the user equipment.

17. A method according to claim 16, wherein the reporting configuration information instructs the user equipment to report information using one of: radio resource control messaging; inband signalling.

18. A method as set forth in any of claims 14 to 17, further comprising establishing dual connectivity with the first base station and a third base station, the third base station comprising a long-term evolution base station.

19. A method as set forth in claim 18, further comprising maintaining a signalling radio bearer with the second base station.

20. A method comprising:

sending, to a user equipment in dual connectivity with a first base station and a second base station, a request from the second base station for the user equipment to send cell update information to the first base station, the first base station comprising a long-term evolution base station and the second base station comprising a new radio base station.

21. A method according to claim 20, wherein the request comprises reporting configuration information for the user equipment.

22. A method according to claim 21, wherein the configuration information instructs the user equipment to report information using one of: radio resource control messaging; inband signalling.

23. A method according to claim 22, wherein the radio resource control messaging comprises long-term evolution radio resource control messaging.

24. A method according to claim 22, wherein the inband signalling comprises use of radio link control/media access control layer control elements.

25. A method according to any of claims 21 to 24, the configuration information comprising trigger condition information, configured to trigger a cell change by the user equipment.

26. A method according to any of claim 20 to 25, the configuration information comprising information to cause the user equipment to provide signal quality level information of a previous cell and signal quality information of a new cell.

27. A computer program product for a computer, comprising software code portions for performing the steps of any of claims 1 to 26, when the program is run on the computer.

28. An apparatus comprising:

at least one processor and at least one memory including computer program code, the at least one memory and the computer program code configured to, with the at least one processor, cause the apparatus at least to:

receive, at a user equipment in dual connectivity with a first base station and a second base station, a request from the first base station for information of a link-status of the user equipment with the second base station, the first base station comprising a long-term evolution base station and the second base station comprising a new radio base station; and

in response to receiving the request, send link-status information of the user equipment with the second base station to the first base station.

29. An apparatus comprising:

at least one processor and at least one memory including computer program code, the at least one memory and the computer program code configured to, with the at least one processor, cause the apparatus at least to:

send, from a first base station to a user equipment in dual connectivity with the first base station and a second base station, a request for information of a link-status of the user equipment with the second base station, the first base station comprising a long-term evolution base station and the second base station comprising a new radio base station; and

receive at the first base station link-status information of the user equipment with the second base station.

30. An apparatus comprising:

at least one processor and at least one memory including computer program code, the at least one memory and the computer program code configured to, with the at least one processor, cause the apparatus at least to:

receive, at a user equipment in dual connectivity with a first base station and a second base station, a request from the second base station for the user equipment to send cell update information to the first base station, the first base station comprising a long-term evolution base station and the second base station comprising a new radio base station; and

send cell update information to the first base station.

31. An apparatus comprising:

at least one processor and at least one memory including computer program code, the at least one memory and the computer program code configured to, with the at least one

processor, cause the apparatus at least to:

send, to a user equipment in dual connectivity with a first base station and a second base station, a request from the second base station for the user equipment to send cell update information to the first base station, the first base station comprising a long-term evolution base station and the second base station comprising a new radio base station.

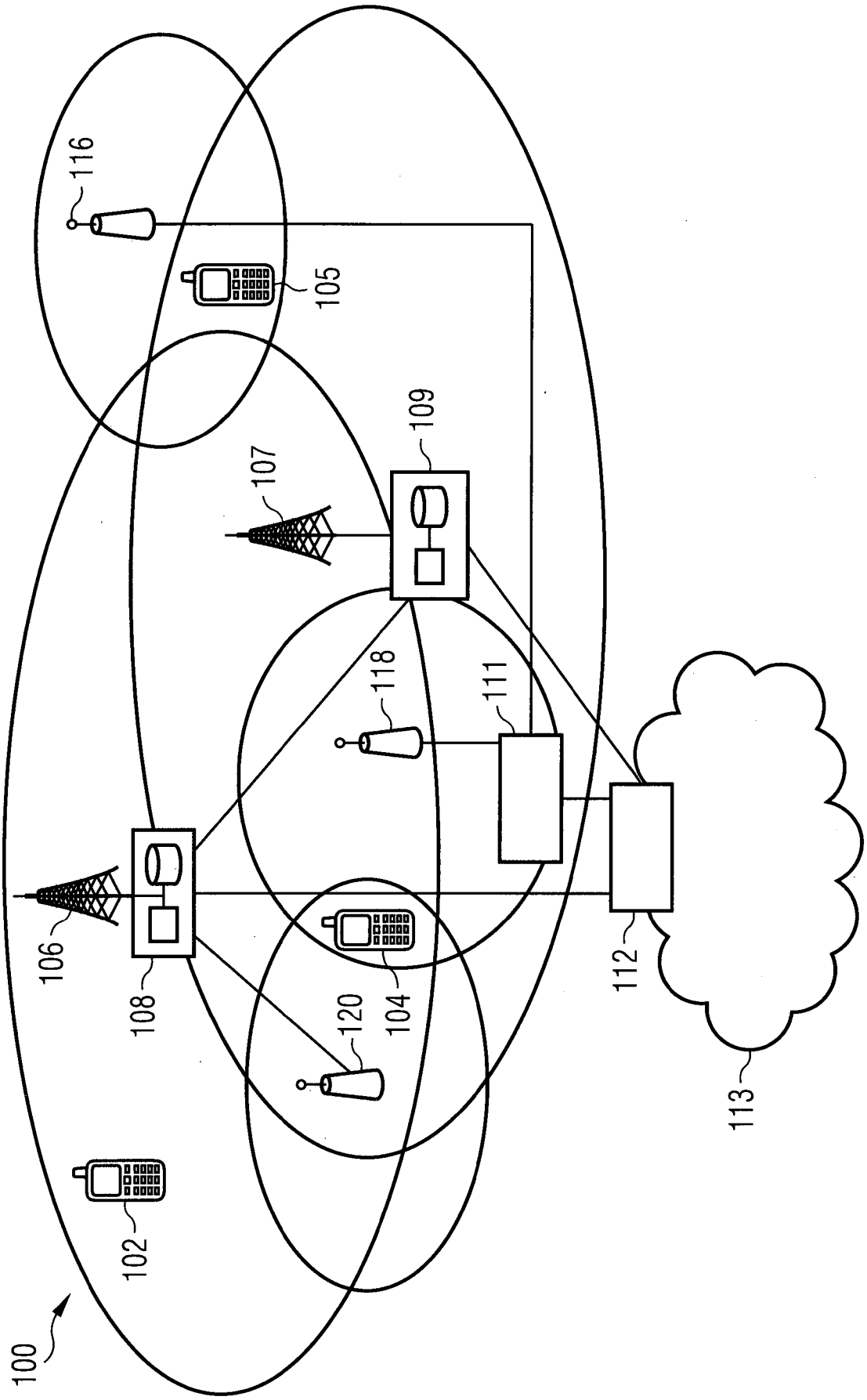

FIG 1

FIG 2

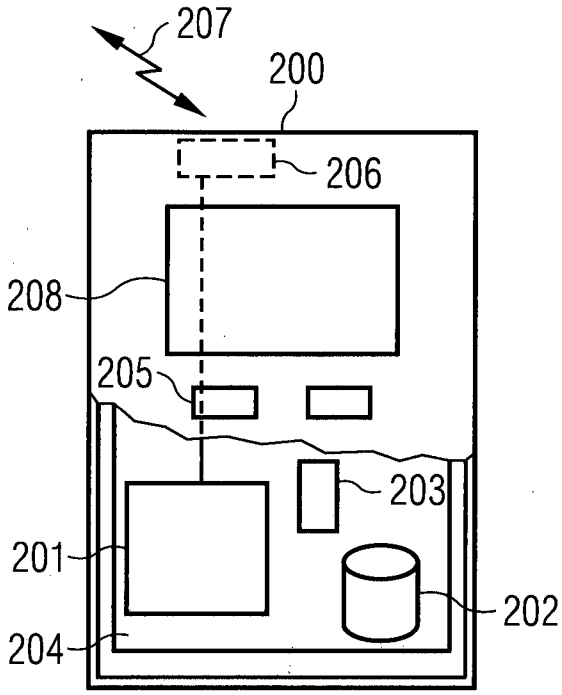

FIG 3

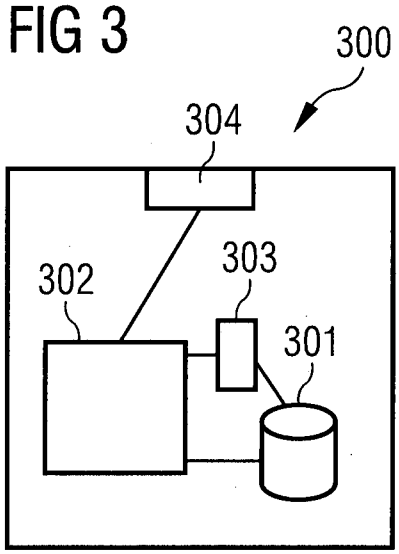

FIG 4

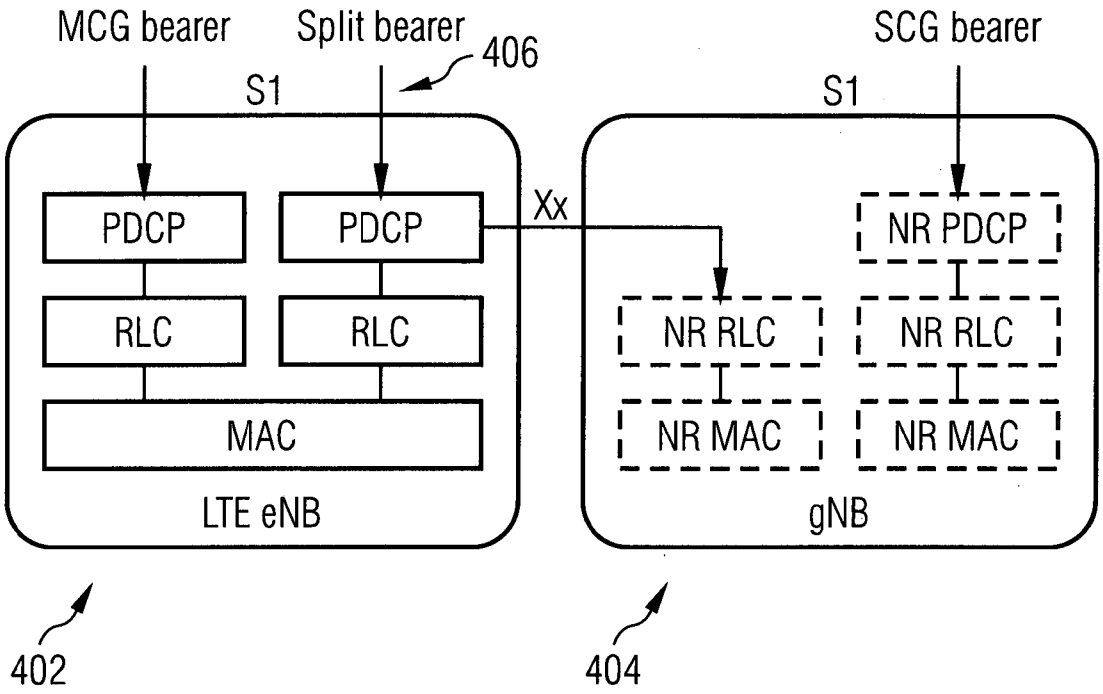

FIG 5A

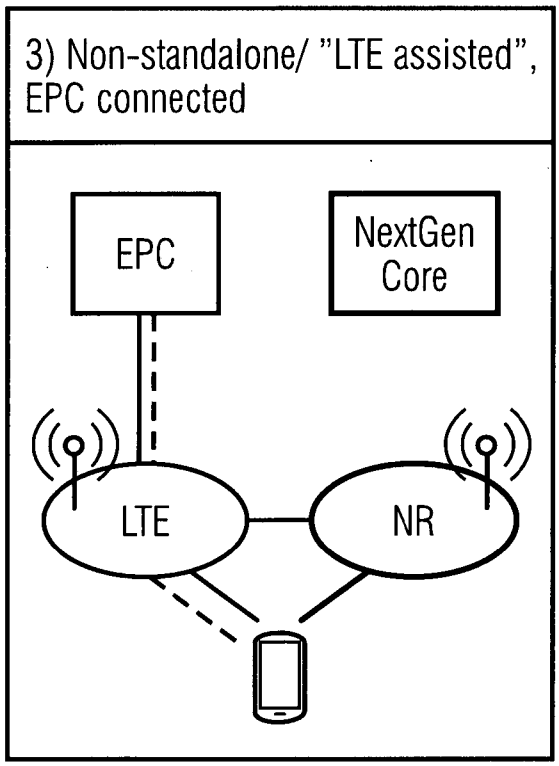

FIG 5B

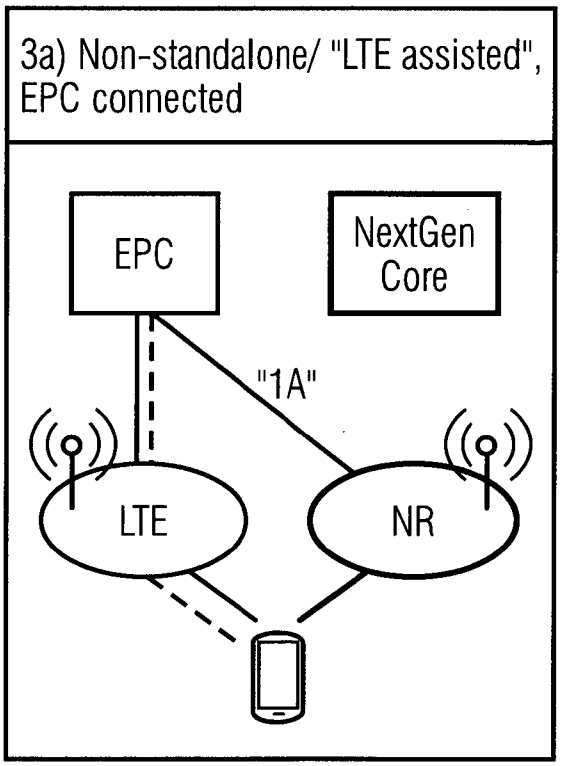

FIG 6

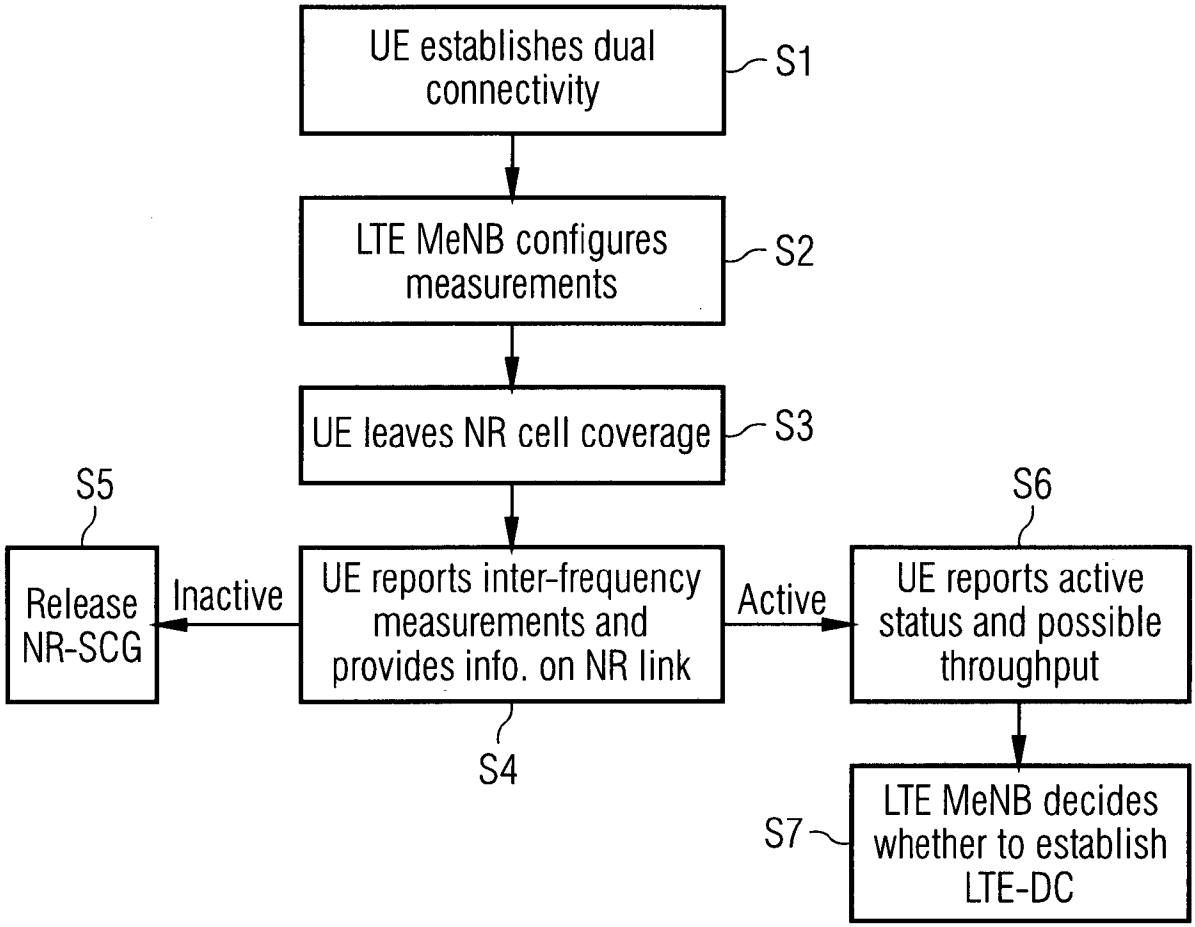
UE establishes dual connectivity
S1
LTE MeNB configures measurements
S2
UE leaves NR cell coverage
S3
S5
S6
Release NR-SCG
Inactive
UE reports inter-frequency measurements and provides info. on NR link
Active
UE reports active status and possible throughput
S4
S7
LTE MeNB decides whether to establish LTE-DC

FIG 7

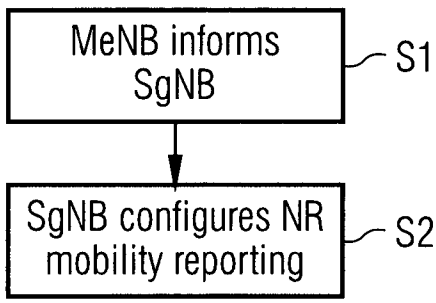
MeNB informs SgNB
S1
SgNB configures NR mobility reporting
S2

FIG 8

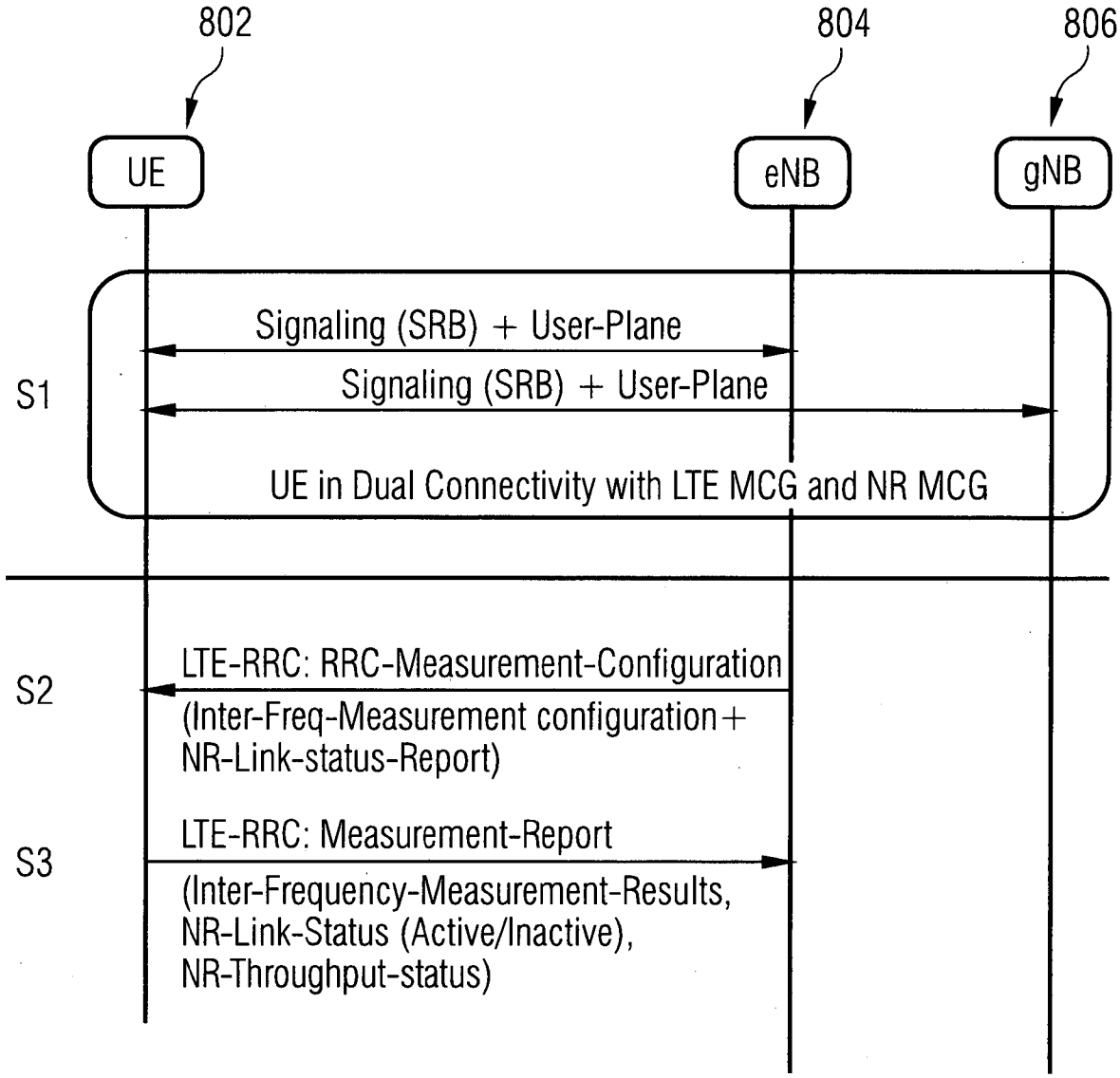
802
804
806
UE
eNB
gNB
S1
Signaling (SRB) + User-Plane
Signaling (SRB) + User-Plane
UE in Dual Connectivity with LTE MCG and NR MCG
S2
LTE-RRC: RRC-Measurement-Configuration
(Inter-Freq-Measurement configuration+
NR-Link-status-Report)
S3
LTE-RRC: Measurement-Report
(Inter-Frequency-Measurement-Results,
NR-Link-Status (Active/Inactive),
NR-Throughput-status)

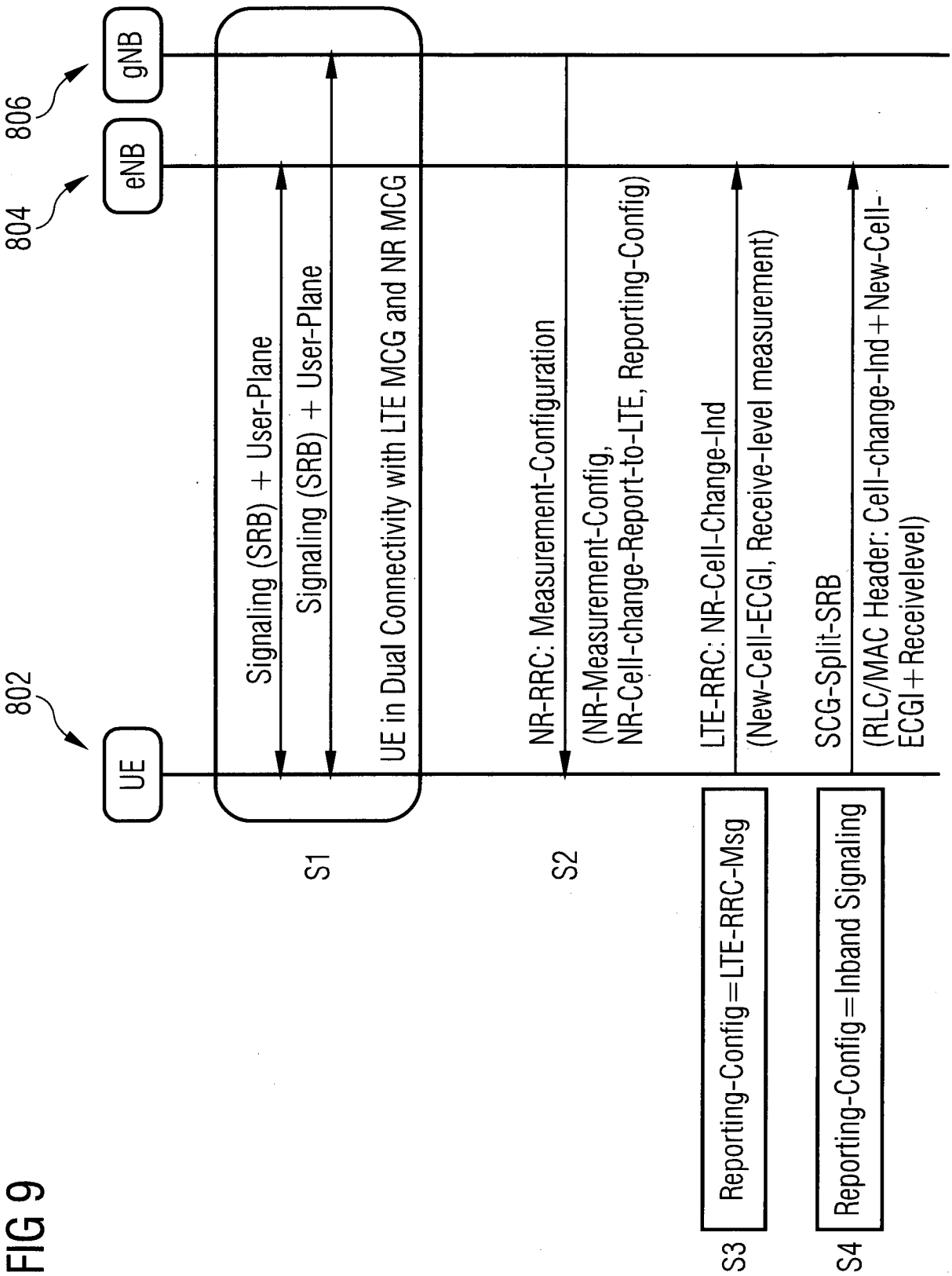
802
804
806
UE
eNB
gNB
Signaling (SRB) + User-Plane
Signaling (SRB) + User-Plane
UE in Dual Connectivity with LTE MCG and NR MCG
S1
NR-RRC: Measurement-Configuration
(NR-Measurement-Config,
NR-Cell-change-Report-to-LTE, Reporting-Config)
S2
LTE-RRC: NR-Cell-Change-Ind
(New-Cell-ECGI, Receive-level measurement)
S3
Reporting-Config=LTE-RRC-Msg
SCG-Split-SRB
(RLC/MAC Header: Cell-change-Ind+New-Cell-ECGI+Receivelevel)
S4
Reporting-Config=Inband Signaling

FIG 9

FIG 10

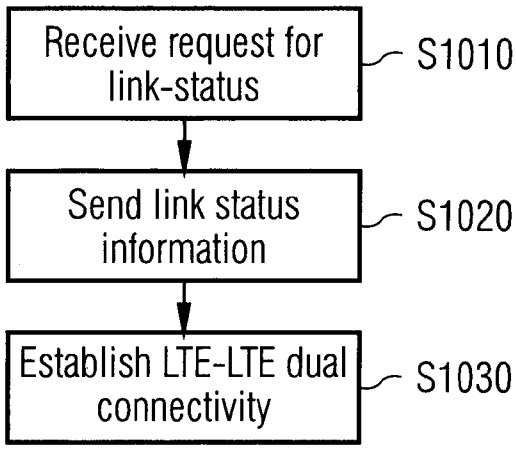

FIG 11

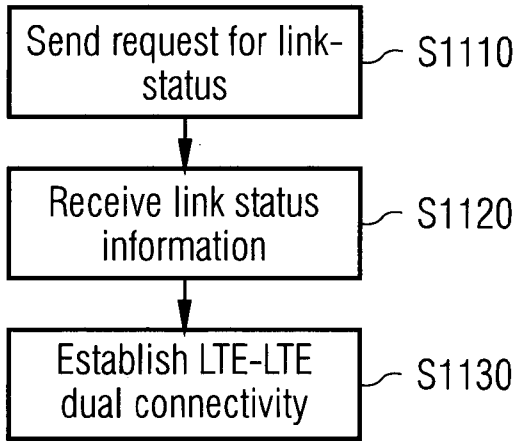

FIG 12

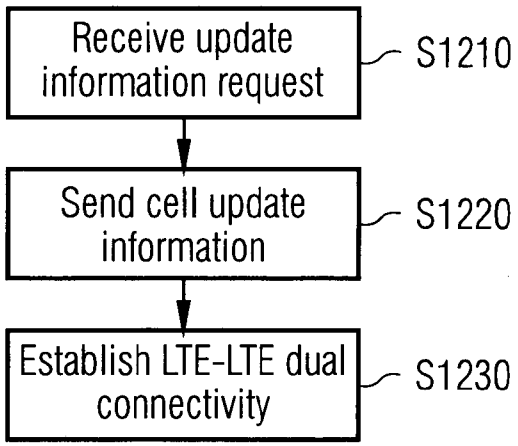

FIG 13

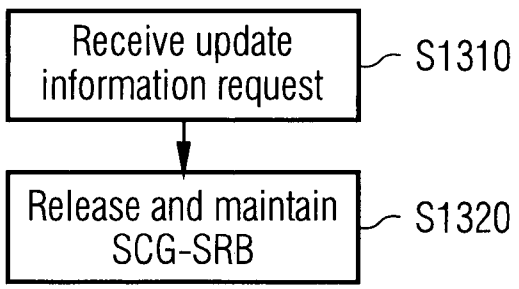

INTERNATIONAL SEARCH REPORT

International application No
PCT/EP2018/061351

A. CLASSIFICATION OF SUBJECT MATTER
INV. H04W76/27 H04W76/15
ADD.

According to International Patent Classification (IPC) or to both national classification and IPC

B. FIELDS SEARCHED

Minimum documentation searched (classification system followed by classification symbols)
H04W

Documentation searched other than minimum documentation to the extent that such documents are included in the fields searched

Electronic data base consulted during the international search (name of data base and, where practicable, search terms used)
EPO-Internal, WPI Data, COMPENDEX, INSPEC, IBM-TDB

C. DOCUMENTS CONSIDERED TO BE RELEVANT

Category*	Citation of document, with indication, where appropriate, of the relevant passages	Relevant to claim No.
X	WO 2015/085273 A1 (INTERDIGITAL PATENT HOLDINGS [US]) 11 June 2015 (2015-06-11) paragraphs [0006] - [0012], [0037] - [0039], [0073] - [0257], [0298] - [0308]; claims 1-25; figures 1A-E,3-5,9-11	1-31
X	WO 2016/208997 A1 (LG ELECTRONICS INC [KR]) 29 December 2016 (2016-12-29) paragraphs [0007] - [0011], [0056] - [0484]; figures 1-25	1-31

☐ Further documents are listed in the continuation of Box C.

☒ See patent family annex.

* Special categories of cited documents :

"A" document defining the general state of the art which is not considered to be of particular relevance

"E" earlier application or patent but published on or after the international filing date

"L" document which may throw doubts on priority claim(s) or which is cited to establish the publication date of another citation or other special reason (as specified)

"O" document referring to an oral disclosure, use, exhibition or other means

"P" document published prior to the international filing date but later than the priority date claimed

"T" later document published after the international filing date or priority date and not in conflict with the application but cited to understand the principle or theory underlying the invention

"X" document of particular relevance; the claimed invention cannot be considered novel or cannot be considered to involve an inventive step when the document is taken alone

"Y" document of particular relevance; the claimed invention cannot be considered to involve an inventive step when the document is combined with one or more other such documents, such combination being obvious to a person skilled in the art

"&" document member of the same patent family

Date of the actual completion of the international search	Date of mailing of the international search report
17 July 2018	24/07/2018

Name and mailing address of the ISA/	Authorized officer
European Patent Office, P.B. 5818 Patentlaan 2 NL - 2280 HV Rijswijk Tel. (+31-70) 340-2040, Fax: (+31-70) 340-3016	Binger, Bernard

1

INTERNATIONAL SEARCH REPORT

Information on patent family members

International application No
PCT/EP2018/061351

Patent document cited in search report	Publication date	Patent family member(s)	Publication date
WO 2015085273 A1	11-06-2015	EP 3078236 A1	12-10-2016
		JP 2016540441 A	22-12-2016
		US 2016309379 A1	20-10-2016
		WO 2015085273 A1	11-06-2015
WO 2016208997 A1	29-12-2016	US 2018184246 A1	28-06-2018
		WO 2016208997 A1	29-12-2016