June 8, 1965 E. J. GLENNER ETAL 3,188,423

CROSSPOINT SWITCHING ARRAYS

Filed July 27, 1961 2 Sheets-Sheet 1

FIG. 2

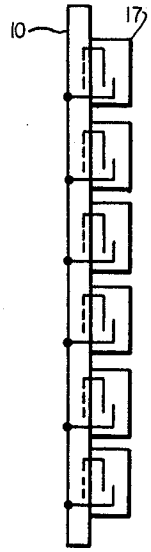

FIG. 1

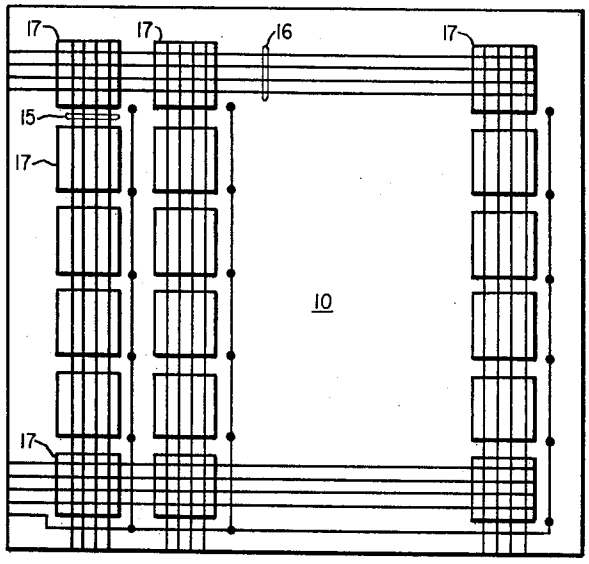

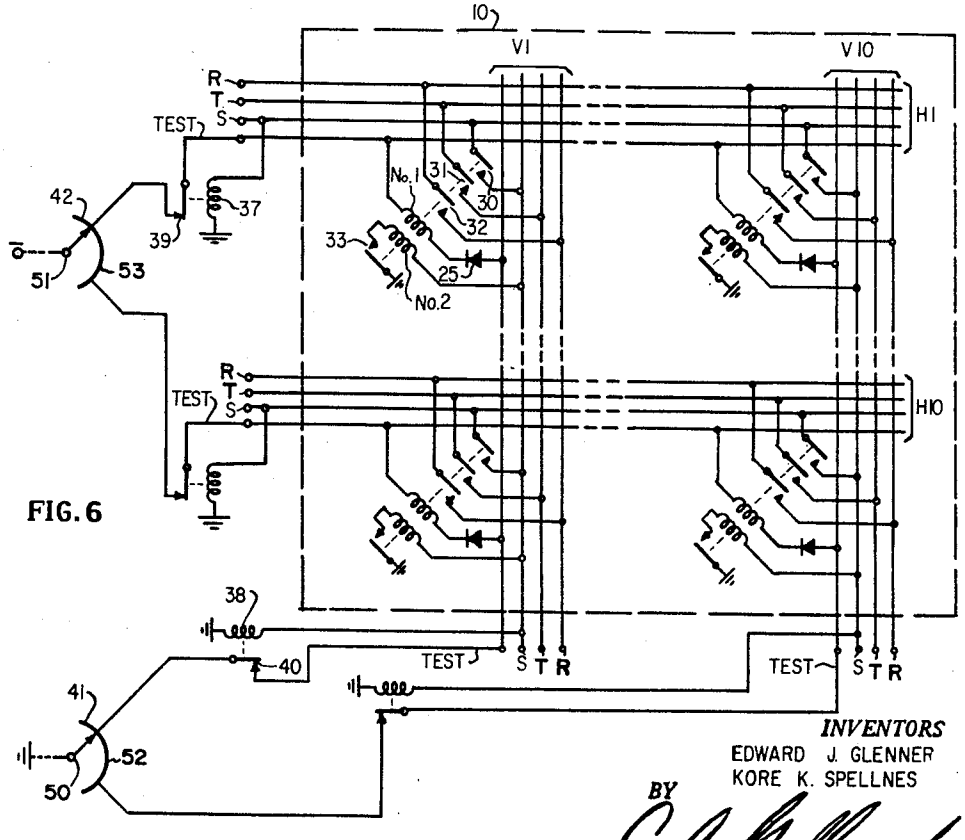

FIG. 6

INVENTORS
EDWARD J. GLENNER
KORE K. SPELLNES

BY

ATTY

June 8, 1965 E. J. GLENNER ETAL 3,188,423

CROSSPOINT SWITCHING ARRAYS

Filed July 27. 1961 2 Sheets-Sheet 2

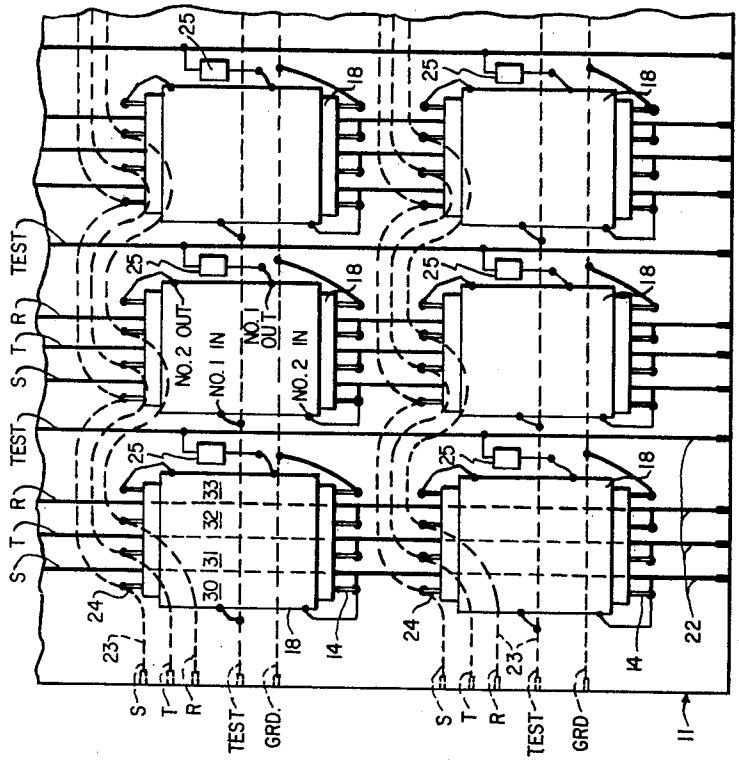

FIG. 3

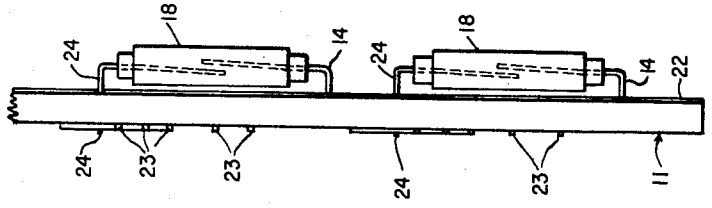

FIG. 4

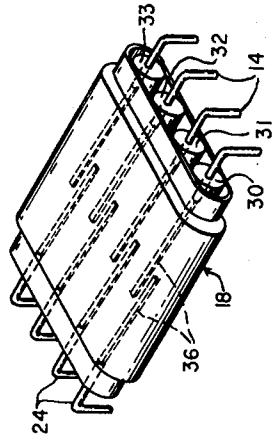

FIG. 5

INVENTORS
EDWARD J. GLENNER
KORE K. SPELLNES

BY C. A. Gulbrandsen
ATTY.

United States Patent Office 3,188,423 Patented June 8, 1965

3,188,423

CROSSPOINT SWITCHING ARRAYS

Edward J. Glenner, Skokie, and Kore K. Spellnes, Glen Ellyn, Ill., assignors to Automatic Electric Laboratories, Inc., Northlake, Ill., a corporation of Delaware

Filed July 27, 1961, Ser. No. 127,237
3 Claims. (Cl. 200—87)

This invention relates to switching arrangements, and more particularly to crosspoint switching arrays of the type which use reed relays as the switching component.

In the reed relay matrices of the prior art the various switch capsules were supported in their center portion by a frame structure which also carried the coils. The reeds of these capsules extended from the two opposite sides of the frame structure and were individually and manually soldered to wires that provided the required outside connections to the reed switches.

It is an object of the invention to provide a reed relay matrix which is greatly simplified, both with respect to mounting and to connecting, as compared with the prior art reed relay matrix assemblies.

According to the principal feature of the invention this is accomplished by mounting the reed relays to a printed circuit board matrix at the crosspoints thereof, with the vertical and horizontal conductors printed on this matrix in an insulated relation to each other.

Another feature of the invention provides an arrangement wherein the vertical and horizontal printed conductors lie in a pattern which eliminates the possibility of overlap.

Other objects and features of the invention will become more clearly understood from a perusal of the following detailed description taken in conjunction with the drawings of which:

FIG. 1 is a partially schematic view showing a plan view of a matrix according to the invention.

FIG. 2 is a side view of the matrix shown in FIG. 1.

FIG. 3 is a plan view of an embodiment of a matrix according to the invention, showing how one set of the printed conductors may be laid out in a serpentine pattern.

FIG. 4 is an end view of the matrix shown in FIG. 3.

FIG. 5 is a perspective view of a relay for use, for example, in the embodiment of FIGS. 3 and 4, showing the reeds contained within the capsules.

FIG. 6 is a schematic diagram showing a typical circuit in which the matrix according to the invention may be used.

FIGS. 1 and 2 illustrate in partially schematic form, a matrix according to the invention. As shown in these figures, the relays 17 are reed relays arranged in rows and columns on one side of the circuit board 10. Shown in these figures are six relays per column and ten per row, however, it is to be understood that this is shown merely by way of example and that the function of the matrix is not altered by changing this ratio.

Sets of conductors 15 and 16 are printed on the circuit board by any of the well-known techniques and they are referred to herein as vertical and horizontal conductors respectively. The relays 17 are mounted generally adjacent the crosspoints of conductors 15 and 16.

Circuit board 10 is preferably rectangular-shaped and made of an insulating material such as a plastic. The board serves a two fold purpose: first, as a mounting board for the reed relays and secondly, as a support for the printed conductors. The thickness as well as the overall dimensions of this board may be chosen so that the board may be mounted into a typical printed circuit board receptacle and so that it may be stacked side by side with other similar boards. The side by side stacking is beneficial when a multitude of these boards with their

relays mounted thereto are placed in a relatively large switching system.

The matrix shown in FIGS. 3 and 4 is generally similar to that illustrated in FIGS. 1 and 2. In FIGS. 3 and 4 the circuit board is designated as 11, the sets of printed vertical conductors as 22, the sets of printed horizontal conductors as 23, and the reed relays as 18.

FIG. 5 shows a representative reed relay 18 which comprises a set of four switch capsules 30, 31, 32 and 33, for example. Each capsule contains a pair of cooperating reeds 36 which are preferably made of a magnetic material. Surrounding these four capsules is an energizing coil which is made up of two windings; a number 1 winding and a number 2 winding, as symbolically shown in FIG. 6. Winding 1 serves as a pull and test winding and winding 2 as a hold winding. Typically, one end of each reed extends within the capsule and the other end of each reed extends externally of the capsule. The ends extending within the capsule contain the contacts and, thus, are in an overlapping relationship. The ends extending externally of the capsule are connected to terminals 14 and 24 respectively. These terminals comprise that portion of the relay assembly that is inserted into the circuit board and that makes connection with the conductors. According to the embodiment shown in FIG. 5 there are four terminals extending from each of the two ends of the relay. Furthermore, the terminals are arranged along a common plane and are L-shaped in form. One leg of each terminal is fastened to a reed and the other leg of the terminal is connected either to a horizontal or vertical conductor depending upon the end of the relay on which the terminal is mounted. As viewed in FIG. 3 terminals 24 are connected to the sets of horizontal conductors 23 and terminals 14 are connected to the sets of vertical conductors 22.

FIGS. 3, 4 and 6 show in detail the connection of relays 18 to a particular circuit environment. As illustrated in these figures, the conductors of the aforementioned horizontal set 23 which are individually denoted T, R, S and Test, are shown making contact with terminals 14 which are secured to one end of relay 18, and the conductors of the aforementioned vertical set 22, which are individually denoted T, R, S, and Test, are shown making contact with terminals 24 secured at the opposite end of the relay. Connected in series with the vertical and horizontal Test leads is the number 1 winding of the coil and diode 25. Connected in series with the S lead is the number 2 winding which terminates at ground.

More particularly, one reed of switch 30 is connected to the horizontal conductor denoted as an S lead and the other reed thereof connected to its corresponding vertical S lead. One reed of switch 31 is connected to the horizontal T lead and the other reed connected to the vertical T lead. Likewise, one reed of switch 32 is connected to the horizontal R lead and the other reed connected to the vertical R lead. Furthermore, one end of winding 1 is connected to the horizontal Test lead and the other end connected to diode 25 which is in turn connected to the vertical Test lead. Switch 33 is connected between the vertical S lead and ground.

In connection with FIGS. 3 and 4 attention is called to the way in which the horizontal conductors are connected to the corresponding relay terminals in a simple manner and without undesirable crossings—in spite of the fact that these relay terminals are horizontally aligned. This is accomplished by using for the conductors 23 a substantially serpentine pattern which is generally horizontally orientated.

For a better understanding of the switching arrangement the operation thereof will be described with particular reference to FIG. 6. For this purpose additional circuit elements are shown in FIG. 6 which may be con-

sidered to be a part of the marker circuit of a crosspoint switching system. These elements are: vertical selector switch 41, which includes bank contact 52 and wiper or marker 50 connected to ground potential; and a horizontal selector switch 42 which includes bank contact 53 and marker 51 connected to —48 volt potential.

The number 1 winding is energized when markers 50 and 51 seize or mark the appropriate Test leads which may also be referred to as "pull" leads. This energizing circuit extends from ground at the wiper of vertical selector switch 41 by way of a bank contact of this switch, contact 40, vertical Test lead, diode 25, winding 1 of the selected crosspoint relay, which in this instance is the relay shown in the upper left hand corner of the matrix FIG. 6, horizontal test lead, through contact 39, through leads of the bank contact, the wiper, to battery. The diodes such as 25 serve to minimize marking of undesired Test leads through feedback connections including the operating windings of two other reed relays of the matrix in series.

The electromagnetic force exerted by the energized winding of the reed relay in question closes the four reed switches 30, 31, 32 and 33 at the crosspoints of the corresponding horizontal and vertical T, R, S and Test leads. Reed switch 33 serves as a locking contact for the crosspoint relay and reed switches 30, 31 and 32 serve to establish a crosspoint connection for the S, R, and T leads.

The number 2 winding to the relays is energized upon providing battery to the S lead. This is accomplished by any circuitry (not shown) which would make up the environment to the present switching arrangement. For example the circuitry could be other stages in the switching train. Consequently, an explanation and a showing of details of such circuitry is not deemed necessary for an understanding of the present case. It is sufficient to say that when battery is thus connected to the S lead a circuit is closed to the holding winding 2 of the crosspoint relay by way of its holding contact 33 so that this relay will remain operated independently of its operating winding 1. Also, in response to the connection of battery to the S lead, and in parallel with the aforementioned circuit to the hold winding of a crosspoint relay, another obvious circuit is closed to the winding of the horizontal cut-off relay 37 and yet another circuit through the winding of a vertical cut-off relay 38 so that the above-traced operating circuit is interrupted, at contact 39 and 40 respectively. The opening of these three contacts indicates to the marker the busy condition of the corresponding horizontal and vertical leads.

At the termination of the connection, the battery is removed again from the S lead causing the crosspoint relay as well as cut-off relays 37 and 38 to restore.

The present invention has been described in detail. However, it is to be understood that a number of variations and modifications in the arrangement as well as the structure can be made without departing from the spirit and scope of the invention as hereinafter claimed.

What is claimed is:

1. A crosspoint matrix comprising: a board of insulating material; sets of printed conductors carried by said board, certain sets of said conductors lying in a substantially straight-line pattern which is oriented in a vertical direction on one side of said board, and other sets of said conductors lying in a substantially serpentine pattern which is oriented in a horizontal direction on the opposite side of said board; pairs of terminals connected to a conductor of said straight line pattern and a conductor of said serpentine pattern respectively; and a plurality of reed relays parallel to said board and arranged in rows and columns on said board, each of said relays having a coil and at least one reed switch operated in response to the energization of said coil and connected between one of said pairs of terminals.

2. A crosspoint matrix comprising:

a flat support board of insulating material;

sets of printed coordinate conductors of said matrix carried by said board and arranged in parallel configuration;

certain ones of said sets positioned on said support board so that each conductor thereof extends in a horizontal direction and others of said sets positioned on said support board so that each conductor thereof extends in a vertical direction and in a spaced and insulated relationship with respect to said horizontal sets;

pairs of terminals inserted into said support board and connected to one of said horizontal conductors and one of said vertical conductors respectively; and a plurality of reed relays positioned on one side of said board and having each a coil with two ends, a pair of contacts which are activated in response to the energization of said coil, one end of said coil being connected to a corresponding conductor of a vertical set and the other end being connected to a corresponding conductor of a horizontal set, and said pair of contacts being connected to a corresponding pair of said terminals.

3. A crosspoint matrix comprising:

a flat support board of insulating material;

sets of printed coordinate conductors of said matrix carried by said board and arranged in parallel configuration;

certain ones of said sets positioned on said support board so that each conductor thereof extends in a horizontal direction and others of said sets positioned on said support board so that each conductor thereof extends in a vertical direction and in a spaced and insulated relationship with respect to said horizontal sets;

and a plurality of relays located on one side only of said board adjacent the respective areas where the projections of said vertical sets and horizontal sets intersect;

each relay having at least one winding with two ends and a pair of contacts actuated in response to the energization of said winding, one end of said winding being connected to corresponding conductor at a vertical set and the other end being connected to corresponding conductor of a horizontal set, and one of said contacts being connected to a corresponding conductor of a vertical set and the other being connected to a corresponding conductor of a horizontal set.

References Cited by the Examiner

UNITED STATES PATENTS

2,889,424	6/59	Glore et al.	200—87
3,030,451	4/62	Jacobson	200—87
3,031,550	4/62	Morrison	200—87
3,038,976	6/62	Koda	200—87

OTHER REFERENCES

Electronics, "Stress Board and Component Miniaturization," pp. 208 and 209, March 10, 1961.

BERNARD A. GILHEANY, *Primary Examiner.*

JOHN F. BURNS, *Examiner.*