C. L. PERRY & M. A. WHITING.

HOISTING EQUIPMENT.

APPLICATION FILED MAR. 5, 1915.

1,188,202.

Patented June 20, 1916.

2 SHEETS—SHEET 1.

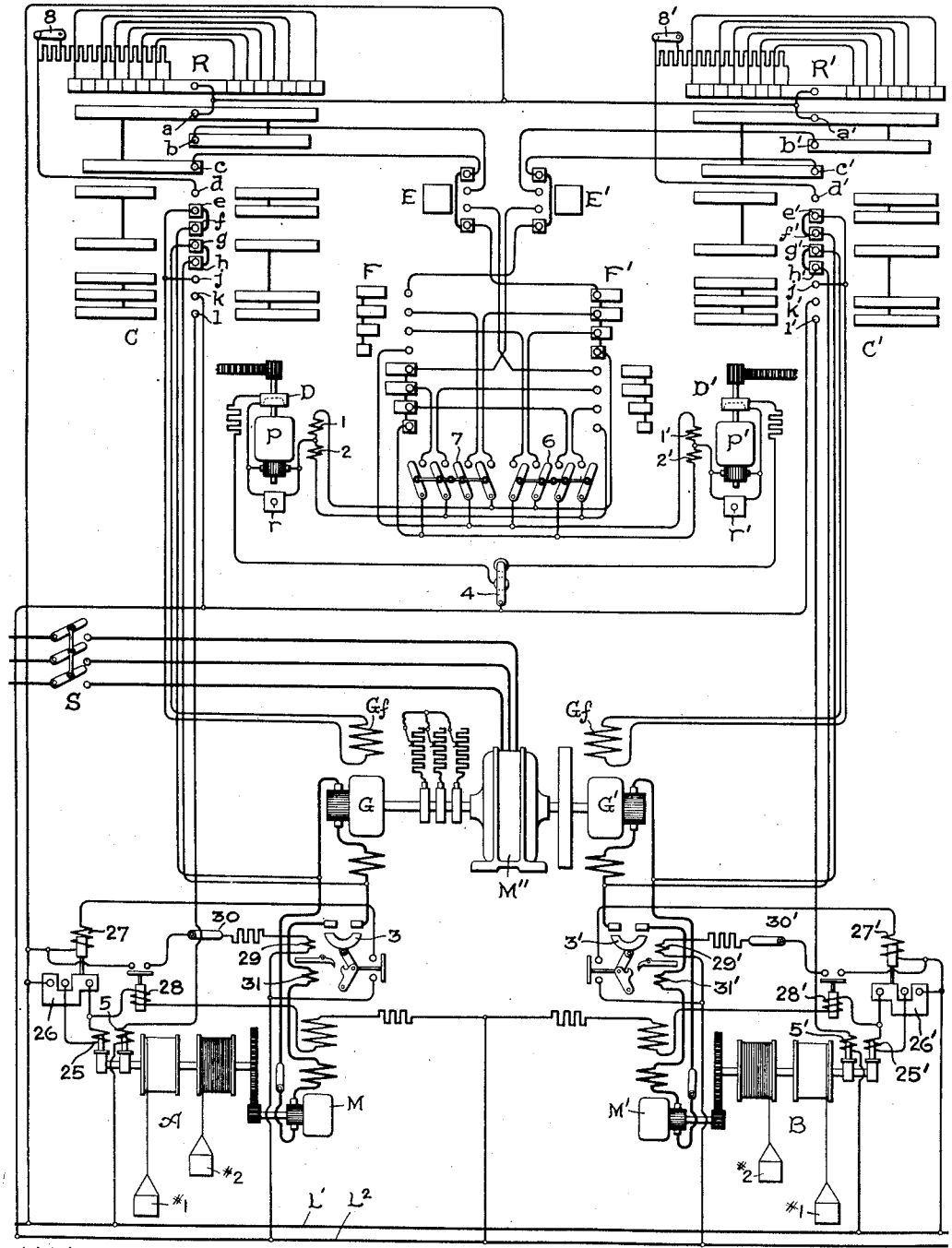

Witnesses:

Helen Oxford

Margaret E. Hoolley

Fig. 1.

Inventors:
Charles L. Perry,
Max A. Whiting,
by Albert G. Davis
Their Attorney.

C. L. PERRY & M. A. WHITING.

HOISTING EQUIPMENT.

APPLICATION FILED MAR. 5, 1915.

1,188,202.

Patented June 20, 1916.

2 SHEETS—SHEET 2.

Fig. 2.

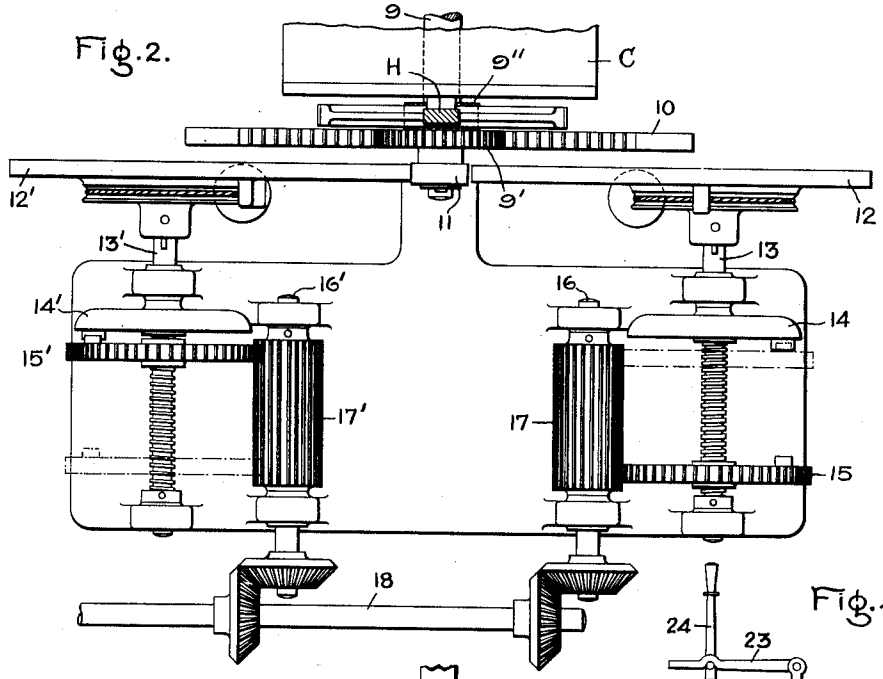

Fig. 4.

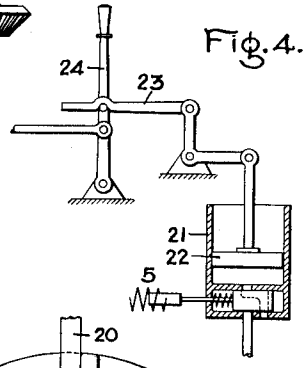

Fig. 3.

Witnesses:

Helen A. Ford

Margaret E. Stoolley

Inventors:

Charles L. Perry,

Max A. Whiting,

Albert G. Davis

Their Attorney

UNITED STATES PATENT OFFICE.

CHARLES L. PERRY AND MAX A. WHITING, OF SCHENECTADY, NEW YORK, ASSIGNORS TO GENERAL ELECTRIC COMPANY, A CORPORATION OF NEW YORK.

HOISTING EQUIPMENT.

1,188,202. Specification of Letters Patent. Patented June 20, 1916.

Application filed March 5, 1915. Serial No. 12,290.

To all whom it may concern:

Be it known that we, CHARLES L. PERRY and MAX A. WHITING, citizens of the United States, residing at Schenectady, county of Schenectady, State of New York, have invented certain new and useful Improvements in Hoisting Equipment, of which the following is a specification.

This invention relates to the control of electric hoists and has for its object the provision of means for controlling the operation of two electric hoists whereby the hoist motors may be started, accelerated, retarded and stopped automatically in such a manner that the hoists make trips alternately in a predetermined cycle.

The invention further provides means whereby the number of cycles for a given time may be varied, or the automatic operation may be interrupted and one or both hoists controlled by hand in the usual way. Such a system of control is particularly desirable in mines where economy in operation is essential and where continuous hoisting from one level is required for considerable periods.

The hoist equipments which it is our aim to interlock and control automatically, are of a common type comprising two hoists each provided with two winding drums which wind in opposite directions, each hoist being driven by an electric motor. The motors receive current from two generators which may be driven by a single induction motor, the combined load being equalized by a fly-wheel and slip regulator, the speed of the motors being controlled by regulating the fields of the generators.

The apparatus which we preferably use for automatically controlling the hoist motors through the generator fields, comprises for each hoist equipment, a drum-controller provided with segments for operating the hoist motor in the forward and reverse directions, a pilot motor for turning the drum controller from "off" to full speed position, mechanical means for returning the controller to "off" position, switching devices for controlling the connections of each pilot motor, and service and emergency brakes with means for operating them.

By means of our invention the two hoists, which, for convenience will be referred to as hoists A and B, may be operated in a predetermined cycle whereby the motor of hoist A will accelerate, run, retard and stop, making a one-way trip hoisting one of its skips and lowering the other. At a suitable point in its trip, hoist A actuates a limit switch which opens the circuit of its pilot-motor and as it approaches the limit of its movement it actuates the controlling means for starting hoist B. While hoist A is at rest for loading or dumping, hoist B motor accelerates, runs, retards and stops, making a one-way trip, hoisting its first skip. At a suitable point in its trip hoist B actuates a limit switch which opens the circuit of its pilot motor and as it approaches the limit of its movement actuates the controlling means for hoist A which makes an opposite trip, hoisting its second skip, while hoist B is at rest for loading or dumping. Hoist A again at a point in this latter trip actuates a switch which open-circuits its pilot motor and as it finishes the trip actuates the controlling means of hoist B which makes a trip in the reverse direction, hoisting its second skip. This completes a cycle and the operation proceeds in this manner.

Our invention will be better understood by referring to the accompanying drawings in which—

Figure 1, shows the invention in diagrammatic form; Figs. 2 and 3 show in detail the cams for periodically actuating the main controllers; and Fig. 4 shows the means for interlocking the automatic and manually controlled brake mechanisms.

Referring to Fig. 1, the two hoists are shown at A and B each driven by a motor M and M′ receiving current from the generators G and G′ respectively, the two generators being driven by the induction motor M″. The combined load on the generators is equalized by a fly wheel and a slip-regulator. An exciter, (not shown) connected to the generators delivers current to bus-bars L′ and L^2 as a source of current for the control equipment.

The controllers C and C′, each provided with two sets of segments, control the operation and direction of rotation of the hoist-motors by reversing the connections of the generator fields. The speed of the hoist motors is controlled by the rheostats R and R′, associated with the controllers C and C′, by varying the strength of the generator

fields. For automatic operation the controllers C and C′ are operated by pilot motors P and P′ respectively, the pilot motors being connected through a train of gears to the controller shafts by magnetic clutches D and D′. The pilot motors shown have divided series fields 1—2 and 1′—2′, the portions 1 and 1′ for operation in one direction and the portions 2 and 2′ for reverse operation and the speed of the pilot motors may be regulated by rheostats r and r'. The connections to the pilot motors P and P′ and their respective magnetic clutches D and D′ are controlled through the limit switches E—E′ and F—F′.

It will be seen, by referring to Fig. 1, that in the "off" position of controller C the field Gf of the generator G is differentially connected across its armature at fingers e, f, g, h of the controller. This connection has the effect of passing a small counter E. M. F. through the generator field Gf thus reducing the residual magnetism of the generator field to a lower value than would otherwise occur and this assists in controlling the hoists more precisely.

Preparatory to starting the automatic operation of the hoist equipment the main switch S is closed connecting the induction motor M″ to its source of supply; the circuit breakers 3 and 3′ are operated to close the hoist motor circuits and switch 4 is then closed, as shown, to connect the pilot motors P—P′ to exciter bus bar L^2. Then with the connections as shown in the diagram and with the #1 skip of each hoist at its lower position, an energizing circuit exists from the exciter bus bars L′ to controller C through finger a and finger c and their coöperating segments, through limit switch E, thence to the upper set of segments of switch F′ to series field 1 of pilot motor P, through its magnetic clutch D, thence to disconnecting switch 4 and finally to exciter bus bar L^2; the energizing of magnetic clutch D connects the pilot motor P (through a train of gears) to its controller C, and the pilot motor P being energized, turns controller C to start generator G and therefore the hoist motor. The field Gf of the generator G is then connected across bus bars L′ and L^2 through the controller C and its associated rheostat R and as the controller C is turned to full speed running position the resistance of rheostat R is gradually cut out of circuit to accelerate the motor of hoist A. During this operation the circuit of the generator field Gf will be from bus bar L′ to rheostat R through its resistance to contact finger d of controller C, from finger d to finger g through their coöperating segments, through field Gf through fingers j and k and their coöperating segments to bus bar L^2.

As the controller C moves away from "off" position it also connects controller fingers k and l through their segments and thus energizes the coil of magnet valve 5 which releases the service air brake of hoist A in a manner described later, so that the brake is fully released at approximately the instant when hoist A motor has developed enough torque to start the hoist. It will be seen that the releasing of the hoist brake can be timed by varying the length of the segments of controller fingers k and l. When the pilot motor has thus turned controller C to full speed position, the pilot motor circuit is interrupted at finger c on controller C, and this will stop the pilot motor and unclutch it from the controller, the hoist continuing to run at full speed. When the trip of the hoist is nearly completed, a set of cams (Figs. 2 and 3), geared to the hoist, causes controller C to move gradually toward the "off" position thereby cutting in the resistance in rheostat R and retarding the hoist motor. These cams are so shaped as to cause the resistance to be cut out in such a manner that the hoist motor is retarded at approximately a uniform rate. As controller C is returned to the "off" position it breaks contacts again at fingers k and l, deënergizing the coil of magnet 5 which causes the brakes to be applied to stop the hoist motor.

As soon as the controller C is moved back toward the "off" position it would close the energizing circuit of the pilot motor unless otherwise prevented as it again makes contact at finger c, which contact was opened when controller C reached the full speed position, at the end of the period of acceleration. In order that the pilot motor shall not thus be again energized and oppose the action of the cams mentioned above, in turning the controller to the "off" position, the limit switch E through which the pilot motor is connected, is arranged to be automatically operated by the hoist at a suitable point in its travel and after the pilot-motor circuit is deënergized in the full speed position of controller C. When limit switch E is operated by the hoist A, it open-circuits the forward running connections of its pilot motor and closes contacts in the reversing connections, but the pilot motor is not energized as the reversing circuit is open at the lower contacts of switch F′.

Just before skip #1 of hoist A finishes its trip the hoist closes the upper contacts of switch F and energizes pilot motor P′ of controller C′ which causes hoist B to operate in a similar manner to make a trip hoisting its skip #1. The circuit of pilot motor P′ is then from bus bar L′ to controller C′ through contact finger a', and contact finger c' and their coöperating segments, to limit switch E′, through the upper contacts of switch F, series field 1′ of pilot motor P′, through its magnetic clutch D′

and through line switch 4 to bus bar L^2. This trip of hoist B is followed in succession by a reverse trip of hoist A and a reverse trip of hoist B hoisting their respective #2 skips and thus complete one automatic cycle comprising a trip each way of each hoist.

If it is desired at any time to increase the number of automatic cycles per given time this may be done by closing the four pole switch 6 which transfers the pilot motor circuits to other segments of switches F and F'. By this means the pilot motors of the two controllers may be energized earlier in the operating cycles of their respective hoists, thereby causing a greater overlapping of operations of the two hoists. Similarly by closing the four pole switch 7 the pilot motors may be operated still earlier, which gives a still greater degree of overlapping of the trips, and therefore, a still greater number of cycles for a given time. To decrease the number of cycles for a given time, the four pole switches 6 and 7 are opened as for the normal cycle so that there is but slight overlapping of trips of the two hoists, then the switches 8 and 8' which are normally closed, are opened to increase the resistance permanently in the fields of the generators G and G', which will give a resultant slower speed for the hoist motors, and therefore, a slower rope speed for each hoist.

The arrangement and operation of the cams referred to above and illustrated in Figs. 2 and 3 will now be described. Two cams and means for operating them from the hoist-drum shafts are provided for each of the controllers C and C'. Referring to Figs. 2 and 3—the shaft 9 of the controller C is provided with a pinion 9' which meshes with a rack 10 and is also provided with a pinion 9'' which meshes with a segmental gear on the hand control lever H. At the middle point of the rack 10 is a pin carrying a roller 11 arranged to ride on the surfaces of the cams 12 and 12' to reciprocate the rack and turn the controller drum. Cam 12 returns the controller to "off" position from the full speed forward position and cam 12' returns the controller to "off" position from full speed reverse position. The cams 12 and 12' are rigidly mounted on the shafts 13 and 13' respectively, on which are also rigidly mounted the clutch members 14 and 14'. The shafts 13 and 13' are provided throughout a greater part of their length with a screw thread or worm and traveling gears 15 and 15' are mounted so as to progress along the threaded portions of the shafts when rotated. The traveling gears have clutch blocks which at certain periods in the operation engage with the clutch members 14 and 14'. Other shafts 16 and 16' are arranged parallel to worm shafts 13 and 13' respectively, and mounted on these shafts are the long pinions 17 and 17' which mesh with and drive the traveling gears 15 and 15'. The shafts 16 and 16' are geared to and driven by the shaft 18 which is connected through gearing to the hoist drum shaft.

At the start of the automatic operation as has been described, pilot motor P turn · controller C from "off" to the full speed position, at which time pilot motor P · de-energized and unclutched from the c ntroller C. This operation of the con roller moves the rack 10 until, in the full speed position of the controller, the roller 11 carried by the rack 10 arrives adjacent to the smaller radius of the cam 12, as indicated by dotted lines in Fig. 3.

When the hoist A starts to operate, the gear 15, which is then at the outer end of the worm shaft 13, starts to rotate being driven by the hoist drum shaft through the shaft 18 and the pinion 17 and travels along the shaft 13 until near the end of the trip of the hoist. The gear 15 then engages with the clutch member 14 and turns the cam 12 in the direction indicated by the arrow. This movement of the cam returns the rack 10 and the controller C gradually to the "off" position as the roller 11 on the rack, rides on the surface of the cam. This action of the cam cuts in the resistance of rheostat R so as to gradually retard the motor. As the controller reaches "off" position the motor of hoist A is entirely deënergized and the brakes are applied. As the hoist A drums revolve during the acceleration of its motor and controller C rotates and forces rack 10 and roller 11 to the position at the extreme right, indicated by dotted lines in Fig. 3, gear 15' moves back toward its dotted position, (Fig. 2), being driven by pinion 17'. As it moves back, cam 12' follows it, being pulled by the weight 19' which is attached to a sheave portion on the cam 12'. The cam is brought to rest in the dotted position (Fig. 3) by the stop 20' ready to receive the roller 11 when the controller C is turned to reverse the hoist motor. As hoist A completes its trip and comes to rest, controller C' is turned by its pilot motor and hoist B operates to hoist its first skip as hereinbefore described, then the pilot motor of controller C is started to turn controller C in the opposite direction to full speed position, when cam 12' is actuated to return controller C again to its "off" position.

The cams and the mechanism for operating them as described above, provide means which, being driven directly from the hoist and acting directly upon the controllers, prevents any possibility of over-winding of the hoists or operation of the hoist motors beyond the desired limits.

The hoist brakes as shown, are released by air, set by gravity and controlled either manually with the usual control lever, or automatically through the magnet valve 5, Fig. 1. For the purpose of controlling the hoist brakes automatically we provide for each hoist brake equipment a pilot air cylinder 21 (Fig. 4) in which operates a piston 22 connected through its piston rod and suitable bell cranks to a link 23 which can be engaged with or disengaged from the manual brake control lever 24.

The operation of the piston is controlled by the magnet valve 5, the electrical connections of which are shown in Fig. 1, and the energizing and deënergizing of which cause the hoist brake control lever 24 to be moved back and forth so that the automatic setting and releasing of the brakes is accomplished in essentially the same manner as if the control lever was moved from full set to full release position by hand.

When desired to operate by hand control the pilot air cylinder of each brake can be unlinked by disconnecting the link 23 from the manual control lever 24. The pilot air piston and links will then move idly to and fro as the magnet valve 5 is energized and deënergized.

The method by which the hoist brake is applied in emergency differs in some respects from the methods ordinarily used, but is equally applicable to hoists which are not arranged for automatic repetition of a hoisting cycle. Referring to Fig. 1 the emergency operation of the brakes of hoist A is effected through magnet valve 25 and similarly in hoist B by magnet valve 25′, the electrical connections of which are controlled through the electrically controlled switches 26 and 26′ whose operating coils 27 and 27′ are energized by circuits across the bus-bars L′ and L², through the auxiliary contacts of the circuit breakers 3 and 3′.

In the drawing, since the circuit breakers 3 and 3′ are open, the switches 26 and 26′ are shown in the position in which the magnet valves 25 and 25′ are deënergized and the emergency brakes applied. When the circuit breakers 3 and 3′ are closed under normal operating conditions, the coils of magnet valves 25 and 25′ are energized to release the brakes, through the fields of the hoist motors and through the coils of the field relays 28 and 28′. An emergency application of the hoist brakes is made under the same conditions as commonly provided for in a direct current hoist, viz: failure of the motor fields which deënergize the field relay 28 or 28′ and opens the circuit of the no-voltage trip coil 29 or 29′ on the circuit breaker 3 or 3′, failure of exciter voltage which deënergizes coil 27 or 27′ of the switch 26 or 26′, failure of A. C. power, overwinding of the hoist drums, opening of the hand operated emergency switch 30 or 30′ on the operator's platform, or by excessive overload which will cause the circuit breaker 3 or 3′ to be opened by the overload trip coil 31 or 31′.

In accordance with the provisions of the patent statues, we have described the principle of operation of our invention, together with the apparatus which we now consider to represent the best embodiment thereof, but it will be obvious to those skilled in the art that the invention may be embodied in many forms differing from that which is diagrammatically illustrated, and accordingly we do not limit ourselves to the particular construction and arrangement of parts shown and described, but aim in the appended claims to cover all modifications which are within the scope of our invention.

What we claim as new and desire to secure by Letters Patent of the United States, is:—

1. A control system for electric hoists comprising in combination two electric motors each of which operates a hoist, automatic starting and stopping means for each motor, and connections whereby the starting means for each motor is automatically set into operation when the hoist driven by the other motor approaches the limit of its movement.

2. A control system for a plurality of electric hoists comprising in combination a motor for operating each hoist, automatic starting and stopping means for each motor, and means operated by each hoist as it approaches the limit of its movement to automatically set in operation the starting means of another hoist motor whereby the hoists are operated in a predetermined automatic cycle.

3. A control system for a plurality of electric hoists comprising in combination a motor for operating each hoist, automatic starting and stopping means for each motor, means operated by each hoist as it approaches the limit of its movement to automatically set in operation the starting means of another hoist motor whereby the hoists are operated in a predetermined automatic cycle, and means for varying the number of automatic cycles per given period of time.

4. A system of control for an electric hoist motor comprising in combination a controller, a pilot motor for operating the controller, a magnetic clutch for clutching the pilot motor to the controller, a switch for establishing connections whereby the magnetic clutch and the pilot motor are energized and the pilot motor caused to advance the controller drum from the "off" position to the position for full speed of the hoist motor, a second switch automatically opened to deënergize the magnetic clutch and stop the pilot motor, and means associated with

the hoist which acts to return the controller to the "off" position to gradually retard and stop the hoist motor.

5. A system of control for an electric hoist comprising in combination a hoist motor, a controller for the hoist motor, a pilot motor for turning the controller from "off" position to full speed position to accelerate the hoist motor at a uniform rate, and mechanical means operated by the hoist and acting directly on the controller to return the controller from full speed position to "off" position and thereby retard the hoist motor at a substantially uniform rate.

6. A system of control for an electric hoist comprising in combination a hoist motor, a controller for the hoist motor, a pilot motor for turning the controller from "off" to full speed position to accelerate the hoist motor at a uniform rate, and cams operated from the hoist shaft so shaped as to retard the hoist motor at a substantially uniform rate.

7. A system of control for an electric hoist comprising in combination a hoist motor, a controller for operating the hoist motor in forward and reverse directions, a pilot motor, a magnetic clutch for clutching the pilot motor to the controller, an automatic switch for establishing connections whereby the magnetic clutch and the pilot motor are energized and the pilot motor caused to advance the controller from the "off" position to the position for full speed of the hoist motor, a second switch automatically opened to deënergize the magnetic clutch and stop the pilot motor, and means associated with the hoist which acts to return the controller to the "off" position to gradually retard and stop the hoist motor, both of said switches having contacts arranged to reverse the pilot motor to operate the controller in the opposite direction in a similar manner for lowering the hoist.

8. A system of control for an electric motor comprising in combination a controller, a pilot motor for turning the controller from "off" position to full speed position to accelerate the motor at a uniform rate, and automatically operated mechanical means acting directly on the controller for returning the controller from full speed position to "off" position to retard the motor at a substantially uniform rate.

In witness whereof, we have hereunto set our hands this 4th day of March, 1915.

CHARLES L. PERRY.
MAX A. WHITING.

Witnesses:
BENJAMIN B. HULL,
HELEN ORFORD.