(No Model.)

C. C. McCLOSKEY, Jr.

GRATE FOR FIRE PLACES.

No. 342,115. Patented May 18, 1886.

Fig. 1.

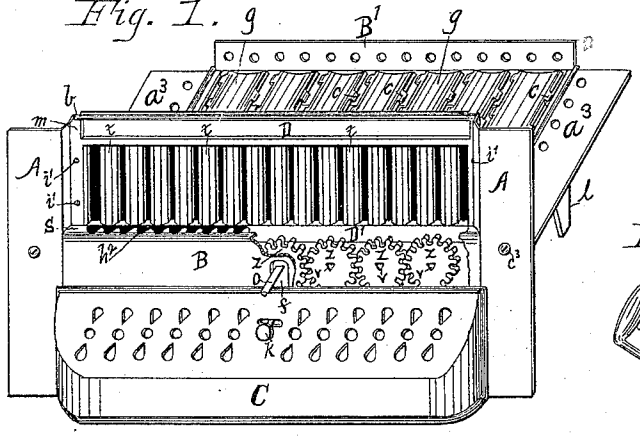

Fig. 7.



Fig. 2.

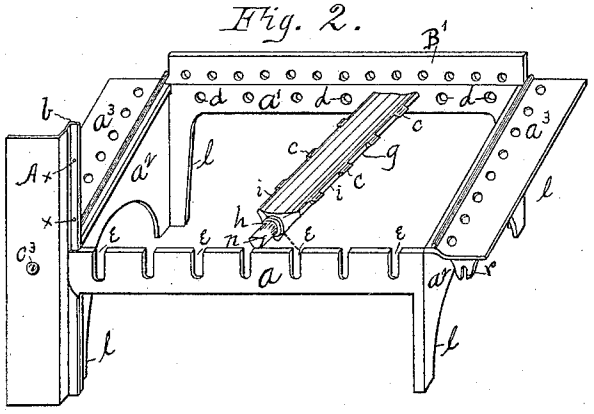

Fig. 6.

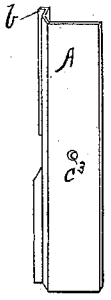

Fig. 3.

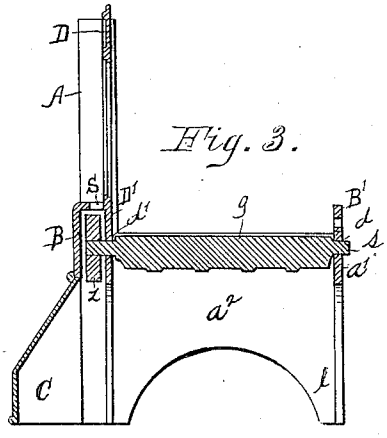

Fig. 4.

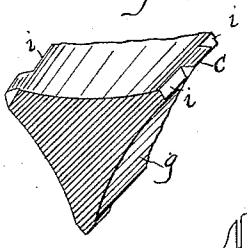

Fig. 5.

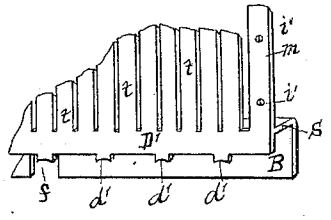

WITNESSES:

W. H. Wheeler

Jno G. Doyle

INVENTOR:

Charles C. McCloskey Jr

per

Roscoe B. Wheeler

Atty

N. PETERS, Photo-Lithographer, Washington, D. C.

UNITED STATES PATENT OFFICE.

CHARLES C. McCLOSKEY, JR., OF DETROIT, MICHIGAN.

GRATE FOR FIRE-PLACES.

SPECIFICATION forming part of Letters Patent No. 342,115, dated May 18, 1886.

Application filed June 12, 1885. Serial No. 168,455. (No model.)

To all whom it may concern:

Be it known that I, CHARLES C. McCLOSKEY, Jr., a citizen of the United States, residing at Detroit, in the county of Wayne and State of Michigan, have invented certain new and useful Improvements in Grates for Fire-Places; and I do declare the following to be a full, clear, and exact description of the invention, such as will enable others skilled in the art to which it appertains to make and use the same, reference being had to the accompanying drawings, and to the letters and figures of reference marked thereon, which form a part of this specification.

My present invention relates to improvements in grates for fire-places; and it consists in the general arrangement of parts as hereinafter set forth, and pointed out in the claims.

The object of my invention is to construct a cheap and durable grate, one that may be readily taken apart for repairs without interfering with the brick-work or any of the permanent fixtures of a fire-place.

In the drawings forming a part of this specification, Figure 1 is an isometrical view having a portion of the hood broken away to show the gear-wheels of grate-bars. Fig. 2 is an isometrical view of the frame, showing manner of inserting the grate-bars. Fig. 3 is a cross-section in elevation of Fig. 1. Fig. 4 is an enlarged section of a grate-bar. Fig. 5 is a rear view of the grate front and hood having parts broken away. Figs. 6 and 7 are enlarged details.

The frame consists of the parts a a' a^2 a^2 a^3 a^3 and legs l, which are cast in one piece, all of which are old. The front a of the frame is provided with a series of slots or grate-bar bearings, e. (See Fig. 2.) The grate-bars g (in cross-section) are of the form of an equilateral triangle, the faces being slightly concaved. (See Fig. 4.) The edges of the bars are cut out at i, the intervals forming clinker rakers or projections c. The rear ends of the grate-bars are provided with journals s, which have a bearing in the holes d of the plate a'. (See Figs. 2 and 3.) The front ends of the grate-bars are provided with journals h, which lie in the slots e of the front plate. The outer ends of said journals diverge from a round to an equilateral triangular form, (in cross-section,) as shown at n of Fig. 2. Fitted loosely onto said ends is a series of gear-wheels, z, having equilateral triangular holes v through them. Said gear-wheels engage with each other, as shown in Fig. 1. The central bar is provided with the arm o, to which the crank-handle H is applied to revolve said grate-bar, as in removing the refuse from the burning fuel.

The grate-front consists of the horizontal bars D D′, united by the vertical bars t, in which the dark lines indicate openings. (See Fig. 1.) B is a hood, joined at the ends by the horizontal arms S, which extend outward at right angles to the vertical bars t, joining the end bars, m. (See Figs. 1 and 5.) Said hood along the front is insulated from the bar D′, as shown by dark shading h^2 of Fig. 1.

It will be observed that when the grate-front is in position the hood B passes over the series of wheels z, and by said hood the wheels are prevented from working off the ends of the grate-bars g, (see Figs. 1 and 3,) and by forming the opening h^2 along the front I obtain an air-passage between said hood and the grate-front, whereby if the hood be nickle-plated it may retain its luster without coloring by heat, as would be the case without the air-passage to keep the hood cool. I attach to the frame the vertical fronts A A by means of a bolt passing through the holes c^3, which engage with the prong r upon the extension a^3. The fronts A A are provided with a flange, b, having holes x x. (See Fig. 2.) The end bars, m, of the grate-front have corresponding holes, i' i', (see Figs. 1 and 5,) and by bolts passing through said holes the grate-front is secured in position, as shown in Fig. 1.

The bar D′ of the grate-front is provided with a series of depending lugs, d'. (See Fig. 5.) Said lugs (when the grate-front is in position) pass within the slots e of the bar a, their ends fitting upon the journals h of the grate-bars, (see Fig. 3,) thereby preventing said grate-bars from lifting as they are revolved. C represents the common draft-front, having knob k, for operating the draft-slide.

The side extensions, a^3, are provided with a series of holes along the inner edge. The fire-bricks are laid upon said extensions, and when building a wide fire-pot the bricks are placed

back from the series of holes, when said holes will allow the ashes accumulating to fall through, thus preventing the burning out of the frame.

I place upon the rear bar of the frame the perforated plate B′, which strengthens the frame and elevates the back, the fire-brick being placed along its upper edge. The slot *f* of the hood receives the arm *o* of the central grate-bar. (See Fig. 1.)

It will be observed from the foregoing construction should a grate-bar burn out or become broken it may be readily taken out by removing the bolts attaching the grate-front to the uprights A A, when the front and hood may be readily taken out, as shown in Figs. 2 and 5, when the grate-bars, wanting repair, may be raised at the front out of the slot or slots *e*, as shown in Fig. 2, when, drawing forward, the grate-bar will be removed. The wheel *z* may be taken off and placed upon the new grate-bar to be inserted, which is accomplished by placing the journal *s* of the grate-bar in one of the holes *d* of the frame and dropping the journal *h* into the slot *e*. The grate-front being then replaced, the work is done.

Having thus fully set forth my present invention, what I claim as new, and desire to secure by Letters Patent, is—

1. In a grate for fire-places, the combination of the supporting-frame, the series of revolving grate-bars, the uprights bolted to said frame, the open grate-front having the hood formed integral with said front, the series of gear-wheels detachably mounted on said grate-bars and housed within said hood, as and for the purposes specified.

2. In a grate for fire-places, the combination of the frame, the series of revolving grate-bars journaled thereon, the vertical uprights A A, the open grate-front, its hood B, formed integrally therewith, being insulated from said front, the series of gear-wheels mounted on said grate-bars and housed within said hood, as and for the purposes set forth.

3. In a grate for fire-places, the combination of the frame consisting of the parts *a a′ a² a² a³ a³*, formed integral of a series of grate-bars pivoted within said frame, the uprights attached thereto, of the open grate-front, its hood attached thereto by the arms S, the series of lugs *d′*, adapted to pass within the series of slots *e* of the bar *a*, and series of gear-wheels housed within the hood, substantially as specified.

In testimony whereof I affix my signature in presence of two witnesses.

CHARLES C. McCLOSKEY, Jr.

Witnesses:

R. B. Wheeler,

Wm. H. Doyle.