United States Patent [19]

Harris, Sr. et al.

[11] **3,809,298**

[45] **May 7, 1974**

[54] **SYRINGE**

[75] Inventors: **Rano J. Harris, Sr.; Rano J. Harris, Jr.**, both of Baton Rouge, La.

[73] Assignee: **Precision Sampling Corporation,** Baton Rouge, La.

[22] Filed: **July 18, 1973**

[21] Appl. No.: **380,461**

[52] **U.S. Cl.** ..... **222/386,** 128/218 P, 239/331

[51] **Int. Cl.** **A61m 5/24**

[58] **Field of Search** ..... 239/329, 331; 222/386; 128/218 P, 218 C

[56] **References Cited**

UNITED STATES PATENTS

3,348,546	10/1967	Roberts et al.	222/386 X
3,583,399	6/1971	Ritsky	128/218 P X
3,677,448	7/1972	Harris et al.	128/218 C X

Primary Examiner—M. Henson Wood, Jr.

Assistant Examiner—Michael Y. Mar

[57] **ABSTRACT**

A liquid syringe, particularly a microsyringe, of a type suitable for separating a trapped gas from a liquid, and for dispensing small, preselected, accurately measured quantities of the liquid specimen into a media, e.g., a G.C. or mass spectrograph. The syringe is characterized by a barrel, a tubular needle mounted on the forward end of the barrel and a reciprocable plunger mounted on the opposite end of the barrel. The bore through the needle and barrel are communicated one with the other, and the bore of the barrel is provided with an opening of cross-section larger than the cross-section of the bore forward of the enlarged opening. The enlarged opening permits separation of gas from a liquid specimen. By withdrawal of the forward end of the plunger rearwardly into this opening, gas enters into the enlarged opening, and on forward movement of the plunger the liquid is separated forward of the plunger tip and gas is transmitted rearwardly through the annulus between the plunger and inside wall of the barrel rearwardly of the enlarged opening.

9 Claims, 5 Drawing Figures

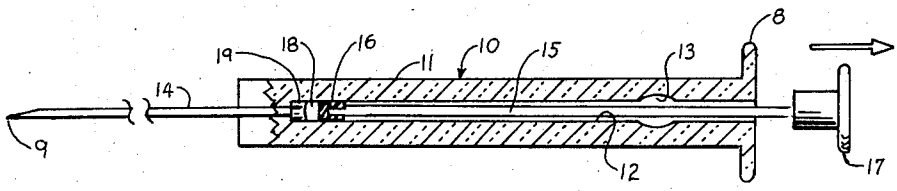

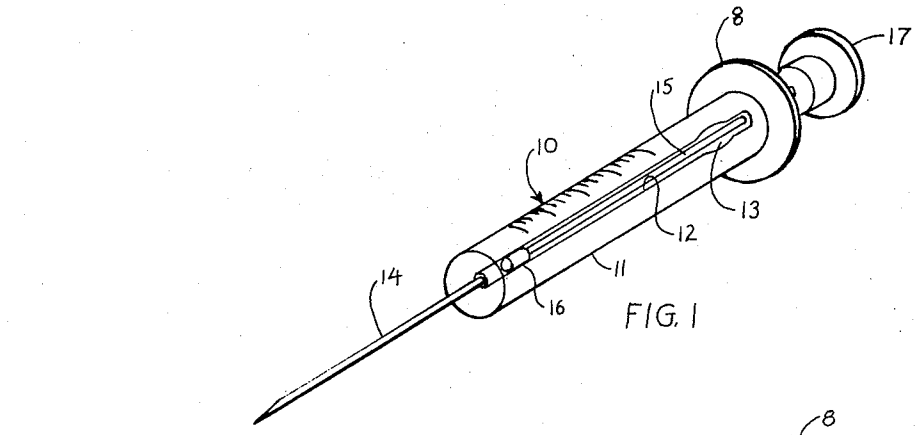

FIG. 1

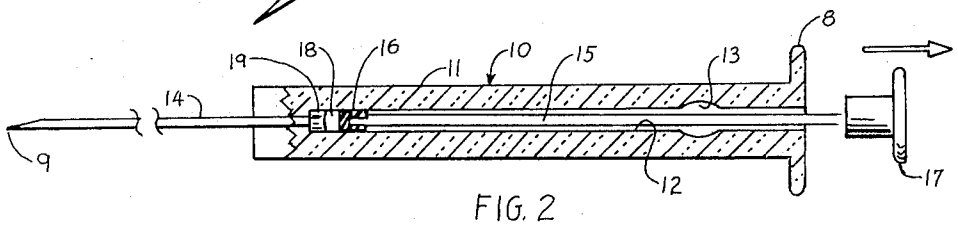

FIG. 2

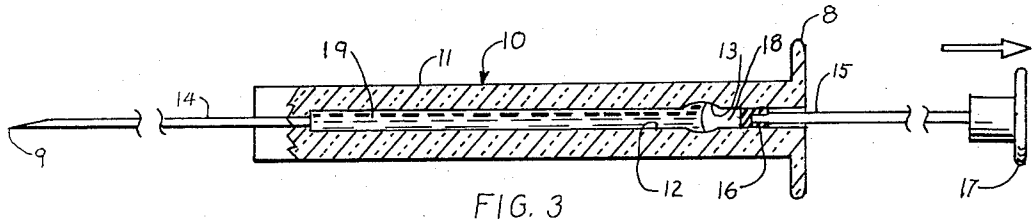

FIG. 3

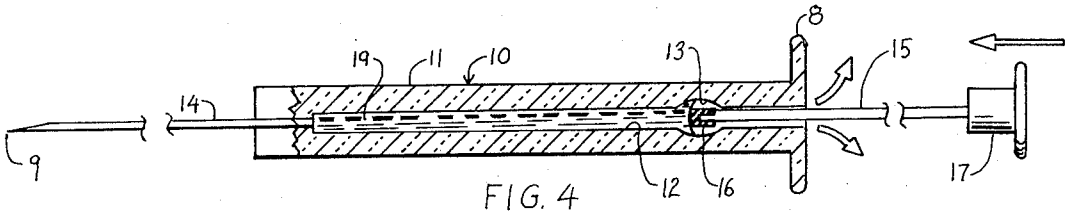

FIG. 4

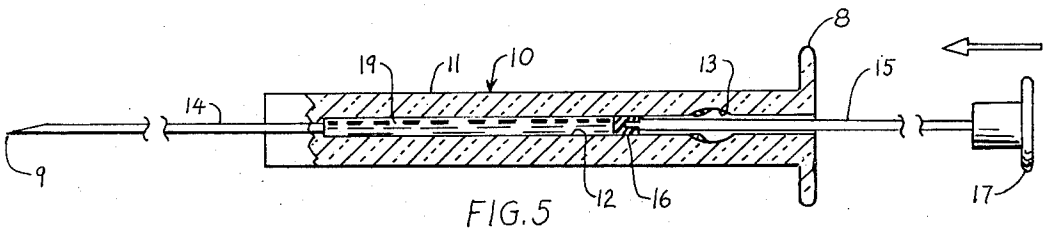

FIG. 5

SYRINGE

It has long been a desideratum in the art to provide a syringe, particularly a microsyringe, from which a trapped gas, e.g., air, can be readily, and conveniently, expelled after having been filled with a liquid. Prior art liquid syringes thus suffer the disadvantage that the plunger generally has to be repeatedly reciprocated while the dispensing end of the needle thereof is maintained below the surface of the liquid specimen being sampled to purge the needle and barrel of an occluded bubble, or bubbles, e.g., air. The penalty for failure to effectively eliminate the air results in error in the measurement of the actual volume of liquid sample intended for injection, which source of error can be particularly significant in high precision microsyringes of the type used for injection of very small and infinitesimal quantities of accurately measured liquid specimens into a media, e.g., modern analytical instruments such as a mass spectrometer, gas chromatograph, and the like. The necessity for continued reciprocation of the plunger in attempts to eliminate gas bubbles, in handling some types of liquid specimens, also creates emulsions. It also occasions increased plunger wear, and sometimes causes plunger damage and abrasion.

It is accordingly, a primary objective of the present invention to obviate these disadvantages and provide a new and improved syringe, particularly a microsyringe, capable of manual or automated use.

A specific object of the invention is to provide a syringe of such character which is particularly useful for the injection of liquid specimens on the order of only about 0.01 to about 5 microliters, or fractional parts thereof.

A further object is to provide a syringe of the kind characterized which is of simple construction, providing a device which can be readily manufactured, is easy to use, and is conveniently disassembled for cleaning and maintenance.

These objects, and others, are provided by the novel apparatus of the present invention characterized as a liquid syringe, particularly a microsyringe, wherein is included the usual barrel, a cannula or needle mounted or positioned in the forward end of the barrel, and a reciprocable plunger mounted in the rearward end of the barrel. The barrel and needle are each formed by an enclosing wall, defining in each member an axial opening or bore, and the bore of the needle and barrel are communicated one with the other. The bore of the barrel is provided with an enlarged open section toward the rearward portion thereof, through which the forward end of the plunger travels, the portion of the bore forward of the said enlarged open section being of substantially uniform diameter. The outside diameter of the forward end of the plunger is substantially equal to the inside diameter of the bore of the barrel (but smaller than said enlarged open section) within which the rod or piston is reciprocably mounted, or substantially equal to the inside diameter of both the barrel and needle within which the rod or piston is reciprocably mounted, wherein the path of travel of the plunger includes both the bores of the needle and barrel. In a preferred form, the forward end of the plunger is capped by a seal of external diameter approximating the inside diameter of the barrel or the inside diameter of both the barrel and needle. In either form, the only path for significant ingress and egress of liquid into or from the barrel is via an opening at the dispensing end of the needle caused by positive movement of the plunger.

These and other salient features and advantages of the invention are further and more fully described by the following description which makes reference to the attached drawings.

Referring to the drawings:

FIG. 1 is a perspective view of a preferred type of liquid syringe embodying the present invention, and

FIGS. 2 through 5, showing the syringe of FIG. 1 in partial section, depict graphically a series of views describing the filling of the syringe with a liquid specimen, elimination of trapped air, and discharge of an accurately measured quantity of the liquid specimen.

Referring to FIG. 1 there is illustrated, in perspective, a syringe 10 which includes a barrel 11 (of transparent character) formed by a side wall which completely encloses a central axial opening or bore 12. The external portion of the barrel 11, if desired, is suitably scribed with indicia marks indicating volumetric measurements. The rearward portion of the axial opening or bore 12, it will be observed, is provided with an enlarged open portion or segment 13, the bore 12 forward of enlarged segment 13 being of substantially uniform diameter. The forward end of the barrel 11 is provided with a cannula or hollow needle 14, open at the forward or dispensing end 9, the axial opening therethrough of which is communicated with the bore 12 of barrel 11. The rearward end of the barrel 11 is flanged, or provided with a flange 8, and a plunger 15 is reciprocably mounted within bore 12. The forward end of the plunger 15 is provided with a resilient cap or seal 16, preferably of a type described by application Ser. No. 66,136, filed Aug. 21, 1970, the outside diameter of which approximates the inside diameter of the bore 12 forward of the enlarged opening 13. The rearward end of plunger 15, for convenience, is provided with a thumb button 17.

The nature and function of the enlarged segment 13 of bore 12 in eliminating a trapped air bubble is described by reference to the series of views depicted by reference to FIGS. 2 through 5. Referring first to FIG. 2, the dispensing, or open, end 9 of hollow needle 14 is immersed in a source of liquid (not shown) and retraction of plunger 15 (or movement of the plunger in the direction shown by the open arrow) is begun. As plunger 15 moves rearward, liquid passes through the opening at the dispensing end 9 of needle 14 and into the axial opening or bore of the needle, with a small amount of air, and begins to fill the forward end of bore 12. Thus, it will be observed, as depicted in FIG. 1, that an air bubble 18 is trapped forward of plunger seal 16, or between liquid 19 and plunger seal 16. The trapped bubble is eliminated by the technique described by reference to FIGS. 3 through 5.

Referring to FIG. 3, plunger 15 is now further retracted, or withdrawn, until the forward end of said plunger 15, or seal 16, has passed rearwardly of the enlarged opening 13 whereon the air bubble enters into said enlarged opening 13. At this time, as described by reference to FIG. 4, the plunger 15 is pushed forwardly into the enlarged opening 13 at which time the air is displaced through the annulus between the bore rearward of the seal 16 and inside wall of the rearward segment of bore 12. On continued forward movement of plunger 15, the seal 16 enters into the bore 12 forward of the enlarged opening 13, such that only liquid is lo-

cated forward of the forward end of seal **16.** A small residuum of liquid may remain within the enlarged opening **16** which itself creates no error in that only the liquid forward of plunger seal **16** is measured and injected. The cycle can be repeated ad infinitum.

It is apparent that various modifications and changes can be made without departing the spirit and scope of the present invention. The syringe is constructed of materials substantially inert or nonreactive to the chemical or corrosive action of the liquid specimens to be measured and dispensed. The barrel of the syringe is normally constructed of glass, but can be constructed of a plastic or plastic-like material. The needle and plunger are normally constructed of metal. The seal is constructed of a resilient material, generally a self-lubricated type of plastic, and preferably polytetrafluoroethylene (e.g., Teflon).

The enlarged opening within the bore must be of greater inside diameter than the inside diameter of the bore forward of the said enlarged opening, and larger than the external diameter of the forward end of the plunger. Generally, the inside diameter of the enlarged opening (at the location of the largest part of the cross-section) ranges from about 1.25 to about 2, and preferably from about 1.3 to about 1.75 times the inside diameter of the bore forward of the enlarged opening, on the other hand, is generally somewhat greater than the length of the plunger seal, where a seal is employed. Generally, however, the length of the enlarged opening ranges no greater than about 1.5 to 2 times the length of the seal.

It is apparent that various changes, such as in the absolute or relative dimensions of the parts, materials used, and the like, can be made without departing the spirit and scope of the invention.

Having described the invention, what is claimed is:

1. A syringe for use in separating trapped gas from liquid, and for dispensing small, pre-selected, accurately measured quantities of the liquid specimen into a media such as an analytical instrument, comprising the combination of

a barrel formed by an enclosing side wall defining a central bore, the bore being of substantially uniform cross-section forward of an opening of enlarged cross-section within the bore located rearwardly within the barrel,

a hollow needle mounted on the front end of the barrel, the bore of which is in open communication with the bore through the barrel,

a plunger reciprocably mounted within the bore from the rearward end of the barrel, the forward end of the plunger being traversible through the enlarged opening within the bore, and within the bore of the barrel forward of the enlarged opening itself,

whereby gas trapped within a liquid to be dispersed can be separated from the liquid, and a liquid specimen isolated from the gas for measurement and ejection by withdrawal of the forward end of the plunger into the enlarged opening within the bore of the barrel, whereupon by forward movement of the plunger the gas is extruded through the annulus between the plunger and inside wall of the barrel rearwardly of the enlarged opening, and the liquid trapped for measurement and ejection by forward movement of the plunger.

2. The syringe of claim **1** wherein the enlarged opening within the bore of the barrel is of cross-section ranging from about 1.25 to about 2 times that of the bore forward of said enlarged opening.

3. The syringe of claim **2** wherein the diameter of the enlarged opening ranges from about 1.3 to about 1.75 times the inside diameter of the bore forward of the enlarged opening.

4. The syringe of claim **1** wherein the forward end of the plunger is capped with a seal, and the enlarged opening is of greater length than the length of the seal.

5. The syringe of claim **4** wherein the enlarged opening is from about 1.5 to 2 times the length of the seal.

6. The syringe of claim **5** wherein the seal is constituted of plastic.

7. The syringe of claim **5** wherein the seal is constituted of Teflon.

8. The syringe of claim **1** wherein the barrel is constituted of a transparent material, and scribed with indicia marks representative of the volumetric capacity of the barrel.

9. The syringe of claim **8** wherein the volumetric capacity ranges from about 0.01 to about 5 microliters.

* * * * *