A. D. KING.

COLLAPSIBLE DRUM.

APPLICATION FILED FEB. 14, 1916.

1,214,171.

Patented Jan. 30, 1917.

2 SHEETS—SHEET 1.

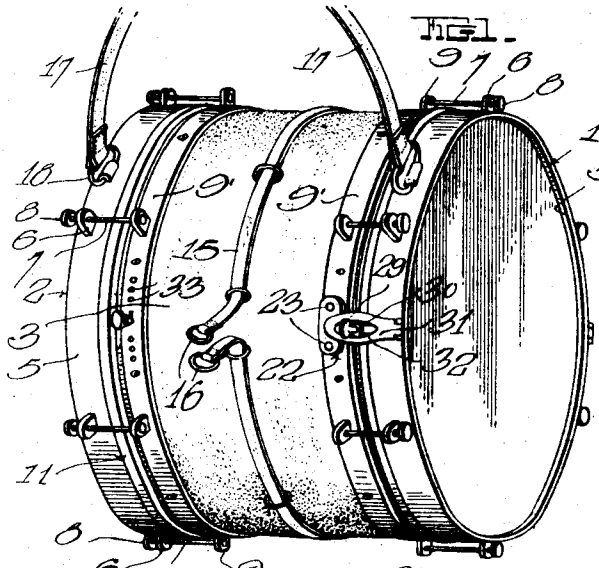

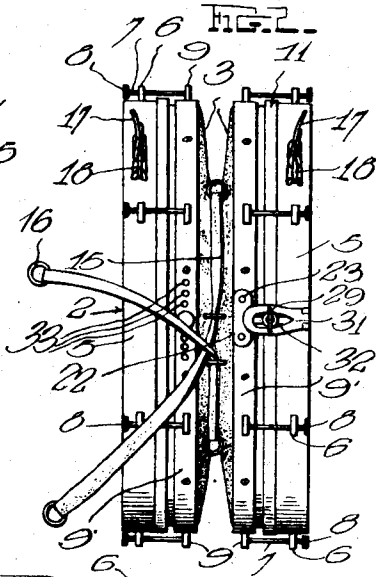

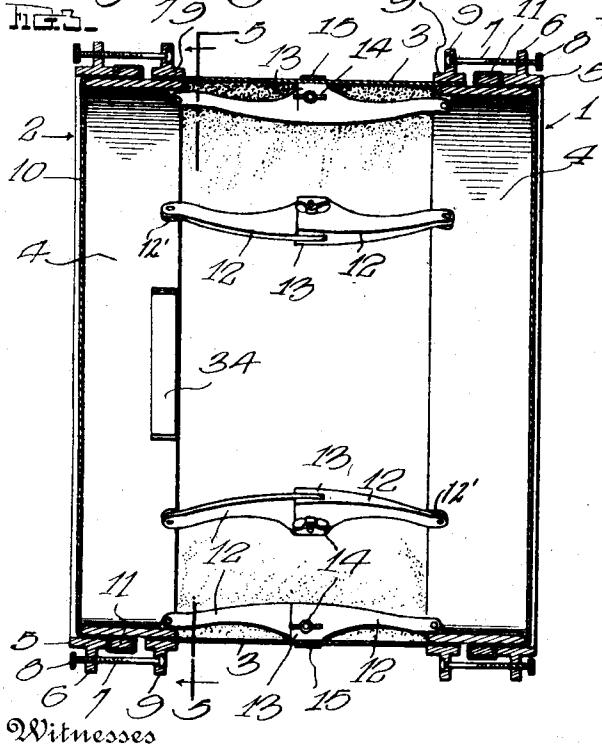

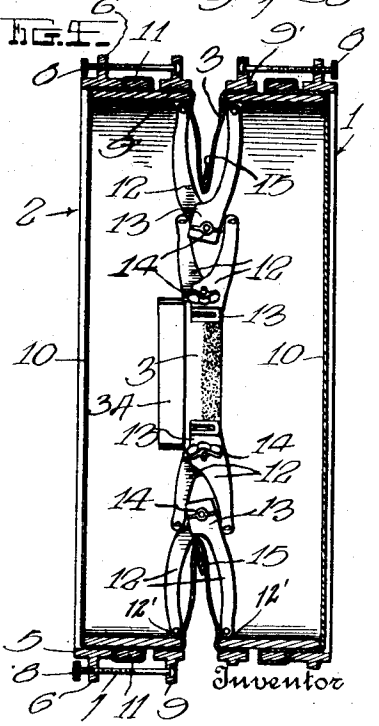

Witnesses
H. Woodard

Inventor
A. D. King
by H. B. Williamson & Co
Attorneys

THE NORRIS PETERS CO., PHOTO-LITHO., WASHINGTON, D. C.

A. D. KING.

COLLAPSIBLE DRUM.

APPLICATION FILED FEB. 14, 1916.

1,214,171.

Patented Jan. 30, 1917.

2 SHEETS—SHEET 2.

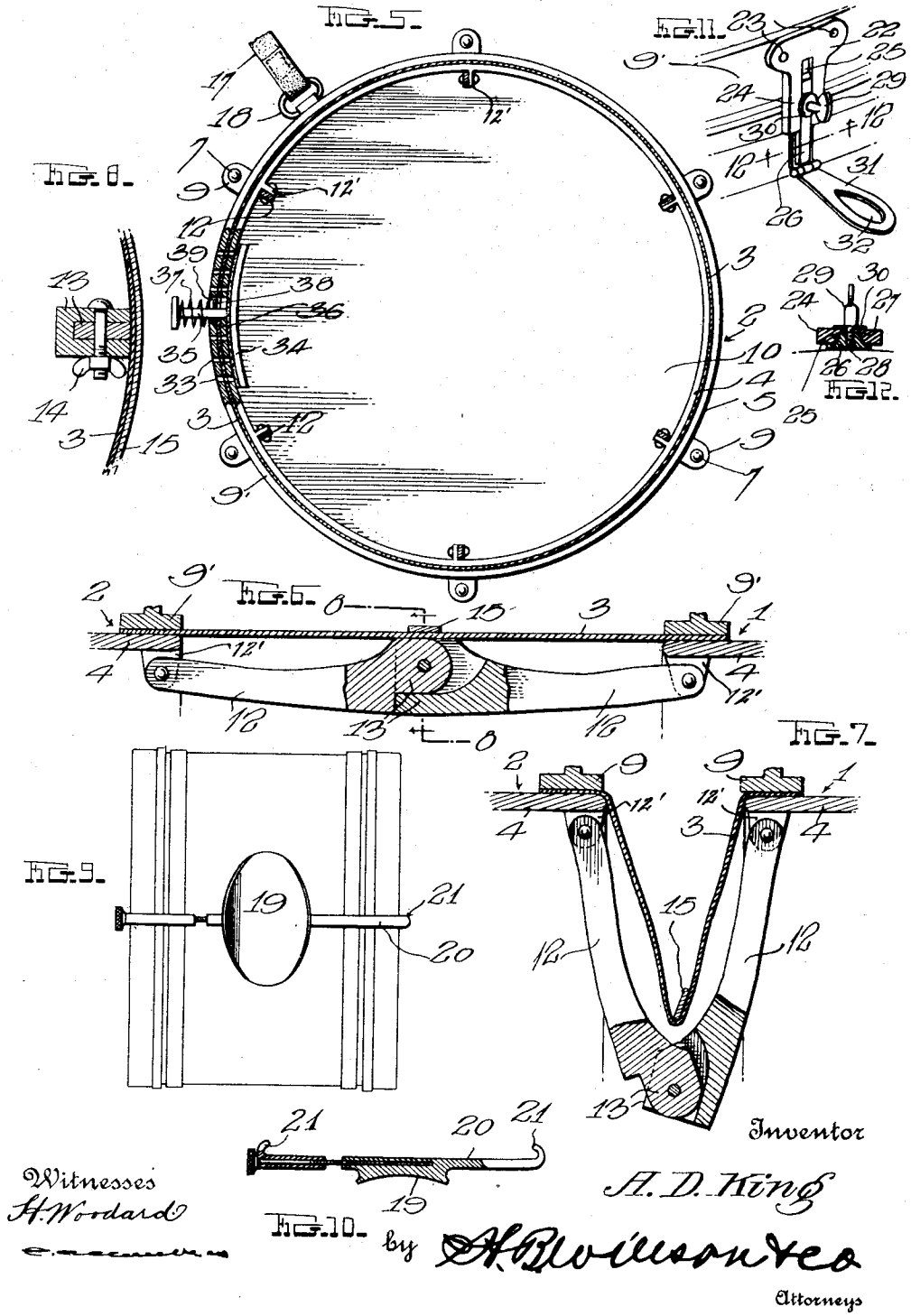

Witnesses
H. Woodard

Inventor
A. D. King
by H. B. Williamson
Attorneys

THE NORRIS PETERS CO., PHOTO-LITHO., WASHINGTON, D. C.

UNITED STATES PATENT OFFICE.

AM DEE KING, OF NEW ALBANY, INDIANA.

COLLAPSIBLE DRUM.

1,214,171. Specification of Letters Patent. Patented Jan. 30, 1917.

Application filed February 14, 1916. Serial No. 78,202.

To all whom it may concern:

Be it known that I, AM DEE KING, a citizen of the United States, residing at New Albany, in the county of Floyd and State of Indiana, have invented certain new and useful Improvements in Collapsible Drums; and I do declare the following to be a full, clear, and exact description of the invention, such as will enable others skilled in the art to which it appertains to make and use the same.

This invention relates to improvements in musical instruments and more particularly to drums, and has for its principal object to provide a drum which can be readily collapsed so that it will occupy considerably less space than when the parts are in operative position.

An additional object of the invention is to provide an improved device for readily causing the two parts of the drum to collapse.

With these and other objects in view, my invention resides in the novel features of construction, combination, and arrangement of parts which will hereinafter be more particularly described and shown in the drawings wherein:

Figure 1 is a perspective view of a drum employing my improved details of construction; Fig. 2 is a side elevation of the drum in partially collapsed position; Fig. 3 is a central vertical longitudinal section; Fig. 4 is a similar view showing the drum in collapsed position; Fig. 5 is a vertical transverse section taken on the plane of the line 5—5 of Fig. 3; Fig. 6 is an enlarged detail side elevation of one of the sectional ribs showing the specific construction thereof; Fig. 7 is a similar view showing the rib partly folded; Fig. 8 is a detail transverse section taken on the line 8—8 of Fig. 6; Fig. 9 is a diagrammatic view of a drum showing my improved breast and stomach plate applied thereto; Fig. 10 is a longitudinal section showing the construction of the attaching means of the breast plate; Fig. 11 is a detail perspective view of the foot member which aids in opening the collapsed heads of the drum; and Fig. 12 is a detail transverse section on the line 12—12 of Fig. 11.

As is usual in devices of this character, my improved drum is formed of a pair of heads 1 and 2 which are connected by a collapsible body 3 of flexible material. Each of the heads comprise a hoop-like shell 4 upon which the head hoop 5 is adapted to slide. The head hoop has a plurality of studs 6 projecting outwardly therefrom which are provided with threaded apertures for the reception of threaded rods 7. One end of the rods 7 is provided with thumb pieces 8, while the opposite ends are secured in studs 9 which project outwardly from a hoop 9′ secured to the shell 4. While these rods are held in said studs 9, they are also adapted to rotate therein to permit the head hoop to be tightened in order that the skin 10 can be made taut. The edges of the skin 10 are attached to the flesh hoop 11 with which the head hoop is adapted to coact to tighten said skin. By this arrangement, the skin on both of the heads of the drum may be readily tightened whenever desired, merely by rotating the tightening rods 7 in the proper direction, and thus drawing the head hoop inwardly.

The inner edges of the shells 4 have inwardly extending lugs 12′ to which two-part ribs 12 are hingedly connected by an ordinary form of rule joint in order that the heads 1 and 2 may be spaced apart in their operative position or readily collapsed. These ribs 12 are disposed within the collapsible body formed by the flexible material 3 as indicated in Figs. 1 and 2. They are provided with heads 13 which are adapted to be pivotally connected as shown in the several figures of the drawings by means of screws passing through apertures therein, said screws being provided with wing nuts 14 in order that the tension may be varied. The heads 13 are so arranged that when the parts of the ribs are disposed in substantially longitudinal alinement, the ribs will be maintained in this position until forcibly pressed inwardly. In other words, the heads 1 and 2 will be effectively spaced apart until the user of the drum desires to collapse the same.

A band or strap 15 extends around the collapsible body of flexible material 3 substantially over the heads 13 of the two-part ribs as shown in Fig. 3. The ends of this strap are provided with rings 16 to facilitate the use of the same. When the user of the drum desires to close or collapse the same, he pulls on the free ends of the strap or band 15 by the rings 16, thus decreasing the diameter of the body and forcing the heads 13 of the ribs 12 inwardly. After the

ribs have been forced inwardly to a certain extent, the two heads of the drum may be readily pressed together without further movement of the strap or band 15.

A shoulder strap 17 is connected by its opposite ends to rings 18 on the opposite shells of the drum. In addition to the shoulder strap, a breast plate 19 is provided when the user of the drum desires to carry the same in parades or the like. This breast plate has laterally extending arms 20 provided with inturned fingers 21 which engage the head hoops 5. When the shoulder strap is in position on the user, this plate 19 will bear against the breast and stomach and relieve the person of considerable strain.

When it is necessary to open the drum, the two heads 1 and 2 are pulled apart until the ribs 12 spring into the position shown in Fig. 3, where they will be held in this position until forcibly pushed inwardly. To aid in pulling the heads of the drum apart I provide at diametrically opposite points on one head, the foot members, one of which is shown in Fig. 11. Each of these foot pieces comprises a substantially T-shaped member 22 which is secured to one of the hoops 9′ by the rivets 23 which extend through the arms of said member. The shank 24 of the member 22 is slotted as shown at 25 to adjustably receive the slide 26. The walls of the slot 25 are inclined and receive the inclined edges of the rib 27 which forms a portion of said slide 26, the same being provided with a threaded aperture to receive the threaded end 28 of a set screw 29 for clamping said slide to the shank of the T-shaped member. As shown in Fig. 12, when the set screw 29 is tightened, the member is clamped between said slide and the washer 30, thus securing said slide in adjusted position.

One end of the slide 26 has hingedly connected thereto an outwardly extending arm 31 having an opening 32 for a purpose to appear. When the arms of each of the foot devices are extended outwardly as shown in Fig. 11, they are positioned to aid in opening the drum. The operator places his feet on these arms 32, grasps the upper head of the drum and pulls upwardly on the same, thus separating the two parts to their operative position. After the drum has been opened, the arms 31 are no longer needed, therefore they are folded upon the members 22, the set screw 29 being received in the openings 32. When said arms have been so disposed, the set screws 29 are rotated to bring the heads thereof transversely of the openings 32, thus retaining said arms in their inoperative position, as will be readily understood from examination of the figures.

In closing the drum it is necessary to provide means through which the air therein may be expelled, and in opening the same it is necessary to admit air. For accomplishing this purpose I provide one of the shells 4 and one of the hoops 9′ with alined openings 33 which can be closed by the valve 34 as clearly shown in Fig. 5. This valve is controlled by a stem 35 which extends through an opening 36 in said shell and hoop. The stem is provided with a head between which and the hoop 9′ a spring 37 is interposed, said spring normally holding the valve in closed position. When, however, it is necessary to open the same, the stem is forced inwardly against the tension of the spring and rotated slightly to shift a lug 38 carried by said stem out of alinement with a slot 39 in which the same normally travels. It will be seen that this lug contacts with the shell 4 when the stem is rotated in its projected position, thus allowing air to readily enter or leave the interior of the drum through the openings 33.

From the foregoing description of the construction and operation of my improved collapsible drum, it will be seen that I have invented a musical instrument which will be of great advantage to those who find it necessary to carry large bass drums about with them.

While I have described my invention with considerable minuteness of detail, it is obvious that many changes can be made in the form and proportion of the several parts without sacrificing any of the principles of the invention as set forth in the following claims.

I claim:

1. In a device of the class described, a pair of drum heads, a collapsible body of flexible material therebetween, and ribs connecting said drum heads to space the same apart, said ribs being disposed within said flexible body.

2. In a device of the class described, a pair of drum heads, a collapsible body of flexible material therebetween, and foldable ribs connecting said drum heads to permit the drum heads to be moved toward each other.

3. In a device of the class described, a pair of drum heads, a plurality of two-part ribs pivoted together intermediate their ends and to said drum heads, said ribs being foldable inwardly to permit the two drum heads to come together, and a collapsible body of flexible material between said heads.

4. In a device of the class described, a pair of drum heads, a collapsible body therebetween, and a flexible band surrounding the intermediate portions of said body to collapse said body when tightened.

5. In a device of the class described, a pair of drum heads, foldable ribs connecting said heads, a collapsible body of flexible material between said heads and surrounding said ribs, and a flexible band around said ribs, said band causing said ribs and body to fold when tightened to collapse the drum.

6. In a device of the class described, a pair of drum heads each comprising a hoop having a skin covering the same, lugs extending from said hoops, ribs pivotally connected by their opposite ends to said lugs; said ribs being connected intermediate their ends by rule joints, a collapsible body of flexible material between said heads and surrounding said ribs, and a band around said body to collapse the same when tightened.

7. In a device of the class described, a pair of drum heads each comprising a hoop having a skin covering the same, lugs extending from said hoops, ribs pivotally connected by their opposite ends to said lugs, said ribs being connected intermediate their ends by rule joints, set screws through said joints to adjust the tension thereof, a collapsible body of flexible material between said heads and surrounding said ribs, and a band around said body to collapse the same when tightened.

8. In a device of the class described, a pair of drum heads, a collapsible body of flexible material therebetween, and a foot member secured to one head to aid in pulling said heads to an open position.

9. In a device of the class described, a pair of drum heads, a collapsible body of flexible material therebetween, and a foldable arm secured to one of said heads to aid the operator to open the collapsed drum.

10. In a device of the class described, a pair of drum heads, a collapsible body of flexible material therebetween, and a vertically adjustable folding arm secured to one of said heads to aid in opening the drum from its collapsed position.

11. In a device of the class described, a pair of drum heads, a collapsible body of flexible material therebetween, a slotted member secured to one of said heads, a slide adjustable in the slot in said member, and an outwardly extending arm secured to said slide.

12. In a device of the class described, a pair of drum heads, a collapsible body of flexible material therebetween, a slotted member secured to one of said heads, a slide adjustable in the slot in said member, an outwardly extending arm connected to said slide, said arm folding upon said member when not in use, and means for holding the arm in folded position.

13. In a device of the class described, a pair of drum heads, a collapsible body of flexible material therebetween, said body being adapted to collapse to bring the heads together, a slotted member secured to one of said heads, a slide adjustable in the slot in said member, a set screw carried by the slide for holding the same in adjusted position, and an outwardly extending arm connected to said slide, said arm folding upon said member when not in use, said arm also having an opening therein to receive said set screw when in folded position, to hold the arm in inoperative position.

14. In a device of the class described, a pair of drum heads, one having an air opening therein, said head also having a slot therein, a valve for closing said opening, a stem on said valve extending through said slot, a lug on said stem normally disposed in said slot to prevent rotation of the valve, said lug holding said valve in open position when moved out of said slot, a collapsible body between said drum heads, and ribs connecting said heads.

In testimony whereof I have hereunto set my hand in presence of two subscribing witnesses.

AM DEE KING.

Witnesses:
JOHN N. LOUIS,
ROBERT W. MORRIS.

Copies of this patent may be obtained for five cents each, by addressing the "Commissioner of Patents, Washington, D. C."