US 20020002378A1

(19) **United States**

(12) **Patent Application Publication** (10) **Pub. No.: US 2002/0002378 A1**

Messerly (43) **Pub. Date: Jan. 3, 2002**

(54) **BLADES WITH FUNCTIONAL BALANCE ASYMMETRIES FOR USE WITH ULTRASONIC SURGICAL INSTRUMENTS**

(76) Inventor: **Jeffrey D. Messerly**, Cincinnati, OH (US)

Correspondence Address:
AUDLEY A. CIAMPORCERO JR.
JOHNSON & JOHNSON
ONE JOHNSON & JOHNSON PLAZA
NEW BRUNSWICK, NJ 08933-7003 (US)

(21) Appl. No.: **09/825,652**

(22) Filed: **Apr. 4, 2001**

Related U.S. Application Data

(62) Division of application No. 09/412,257, filed on Oct. 5, 1999.

Publication Classification

(51) **Int. Cl.**[7] **A61B 17/32**; A61B 17/28

(52) **U.S. Cl.** **606/169**; 606/205

(57) **ABSTRACT**

Disclosed is an ultrasonic surgical instrument that combines end-effector geometry to best affect the multiple functions of a shears-type configuration. The shape of the blade is characterized by a radiused cut offset by some distance to form a curved geometry. The cut creates a curved surface with multiple asymmetries causing multiple imbalances within the blade. Inbalance due to the curve of the instrument is corrected by a non-functional asymmetry proximal to the functional asymmetry. Imbalance due to the asymmetric cross-section of the blade is corrected by the appropriate selection of the volume and location of material removed from a functional asymmetry. The shape of the blade in one embodiment of the present invention is characterized by two radiused cuts offset by some distance to form a curved and potentially tapered geometry. These two cuts create curved surfaces including a concave surface and a convex surface. The length of the radiused cuts affects, in part, the acoustic balancing of the transverse motion induced by the curved shape.

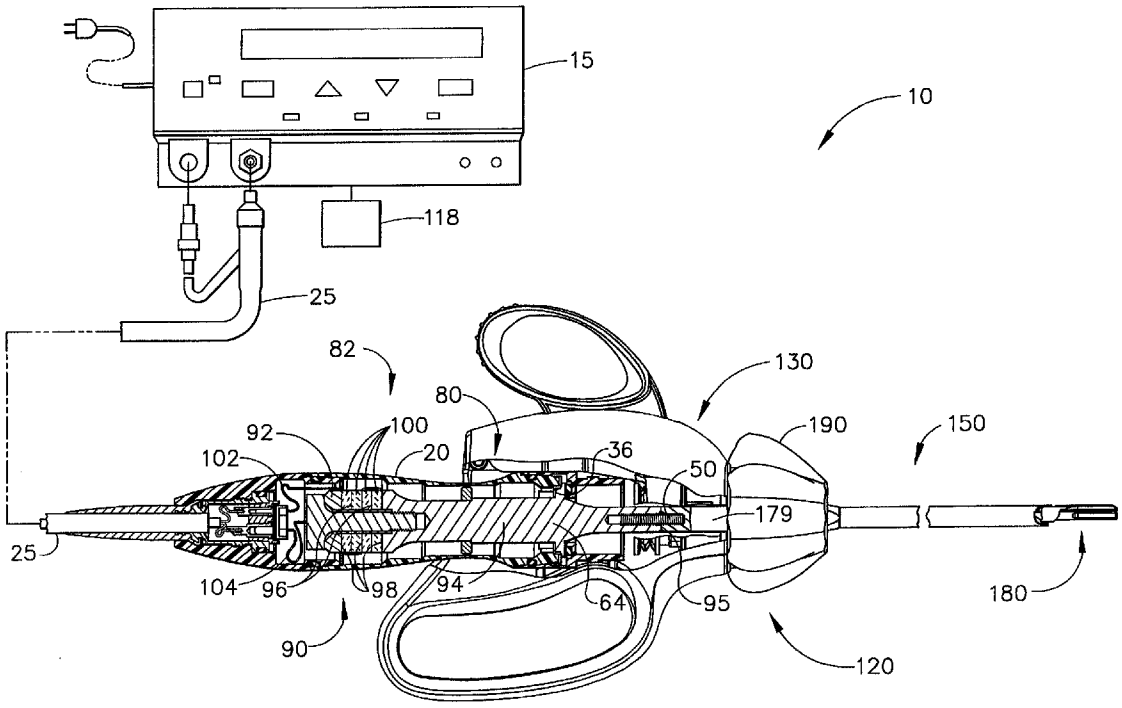

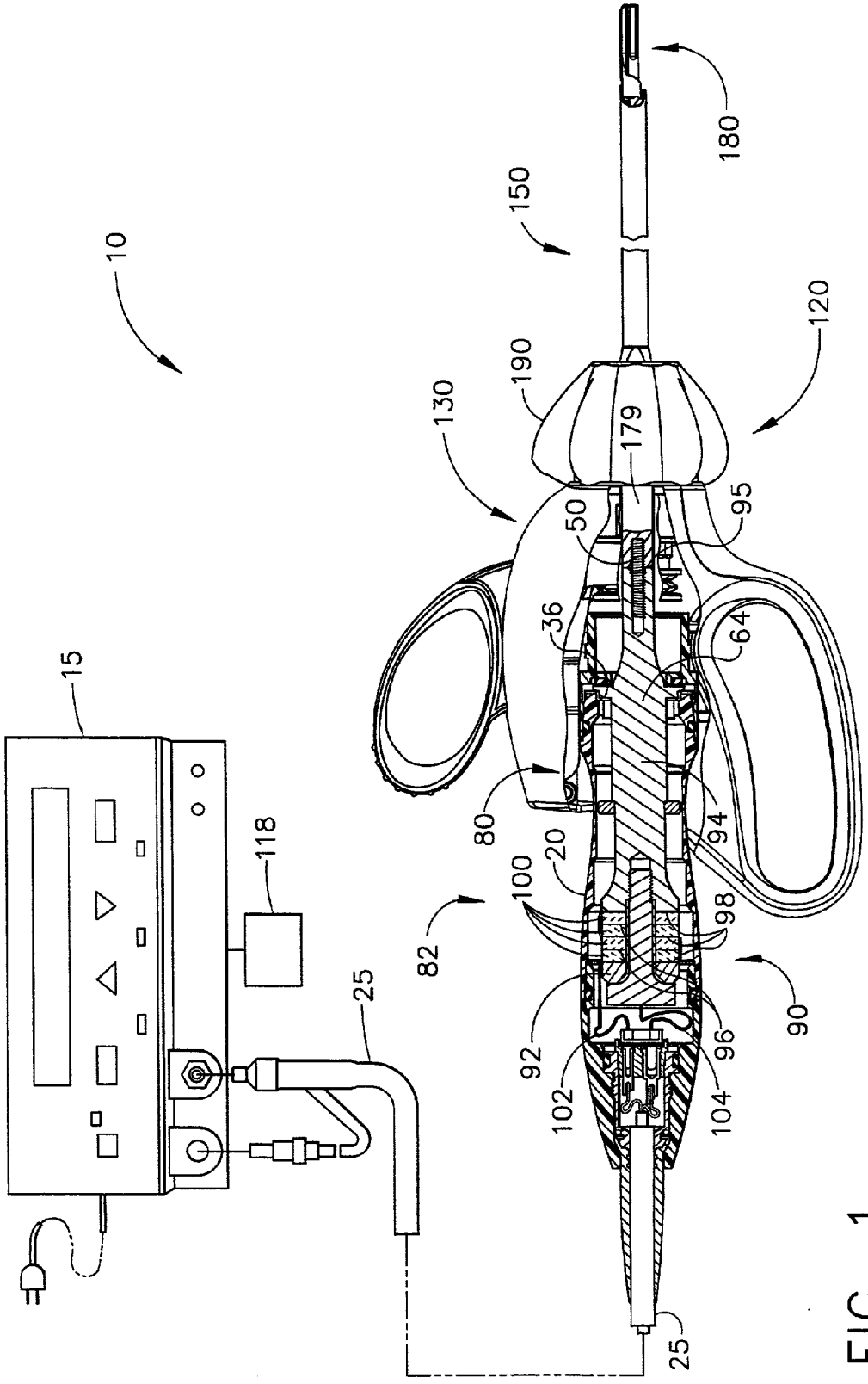
10
15
118
25
150
180
120
190
130
179
50
95
36
64
80
94
20
100
82
98
92
96
90
102
104
25

FIG. 1

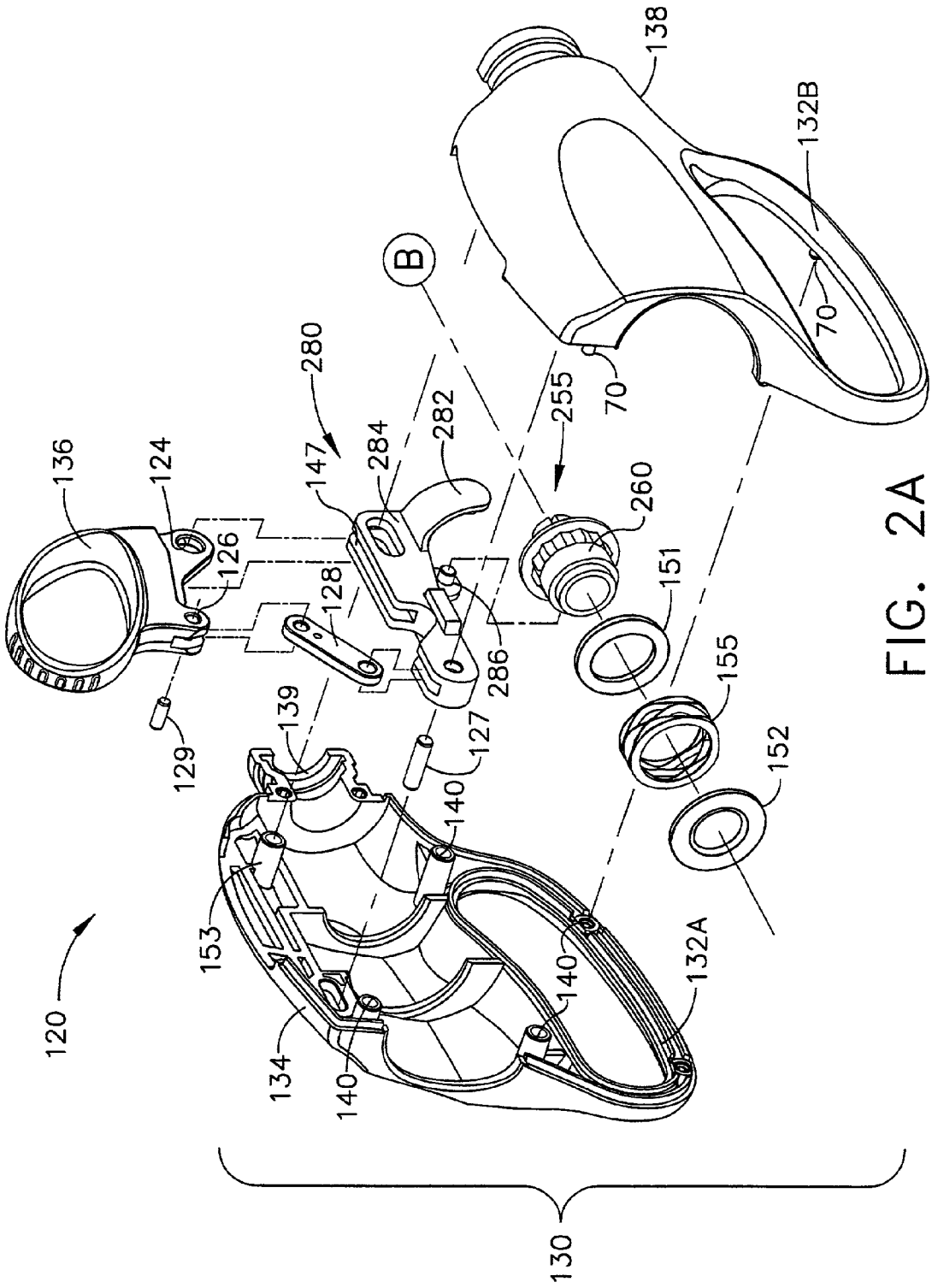
138
132B
70
70
B
280
255
282
284
147
136
124
126
128
260
151
155
152
286
127
139
129
140
153
134
140
140
132A
120
130

FIG. 2A

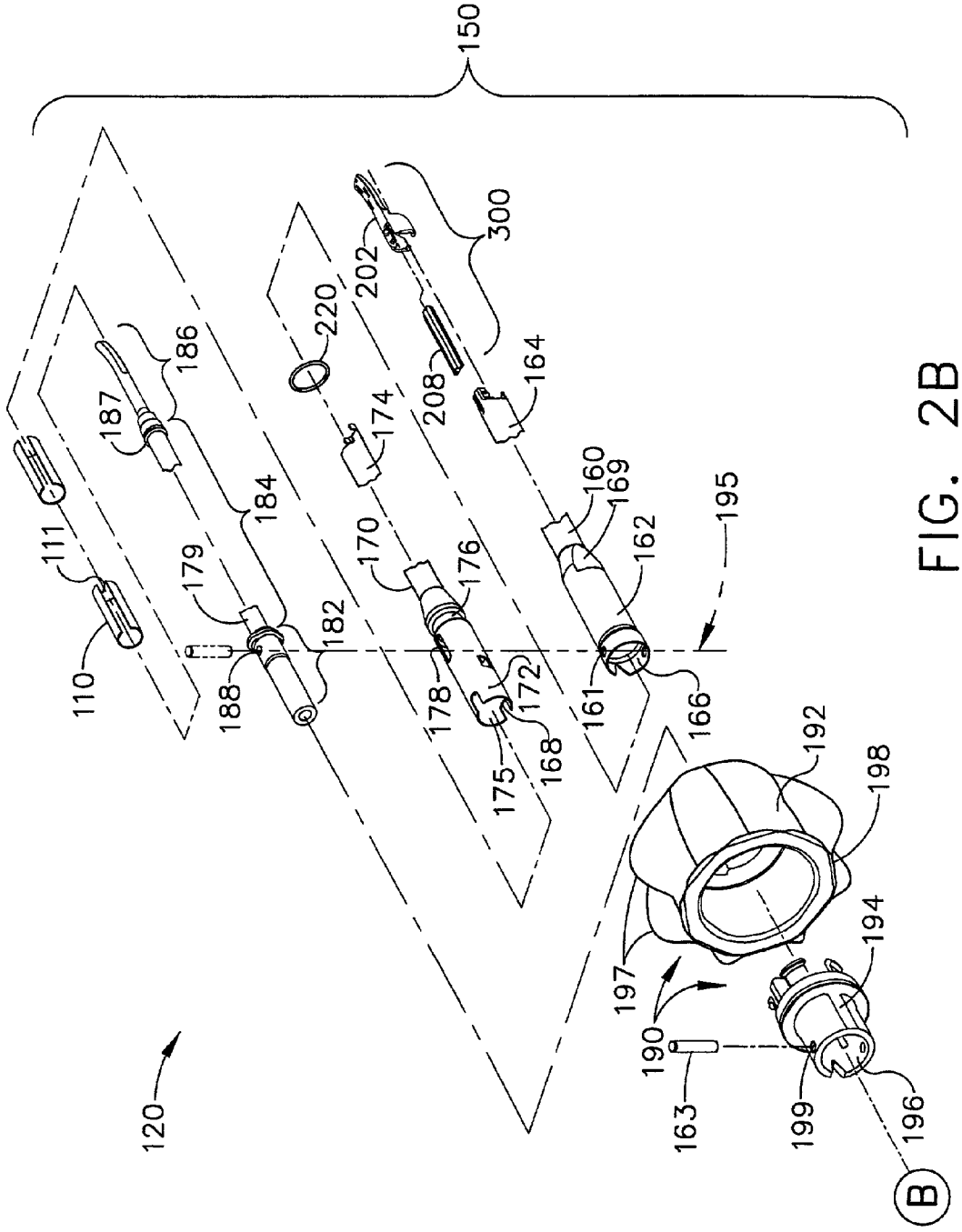
150
300
202
220
208
164
186
187
174
184
160
169
162
195
111
179
170
176
182
110
188
178
172
161
166
175
168
192
198
197
194
190
163
199
196
120
B

FIG. 2B

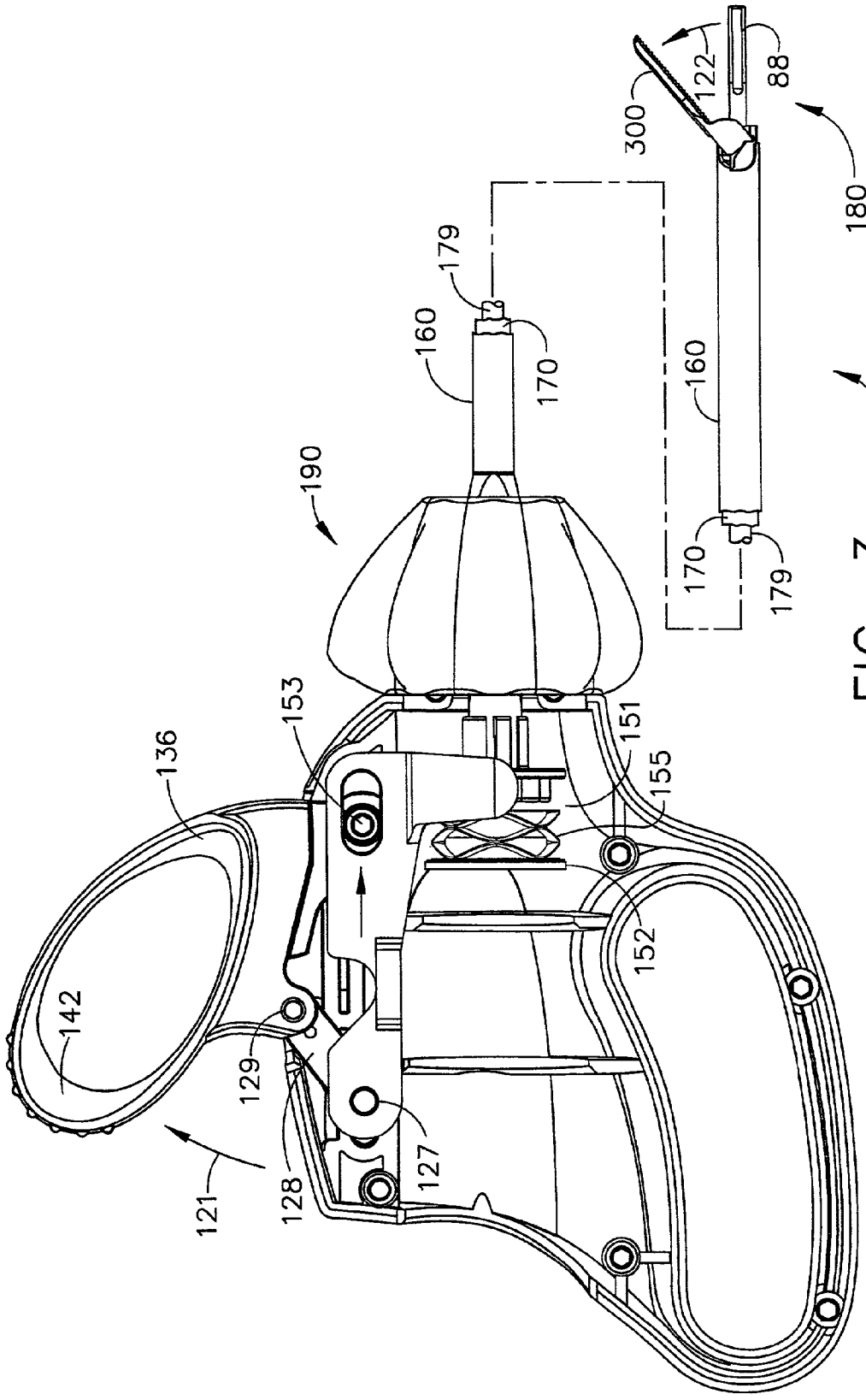
300
122
88
180
179
160
170
190
160
150
170
179
153
151
136
155
152
142
129
127
128
121

FIG. 3

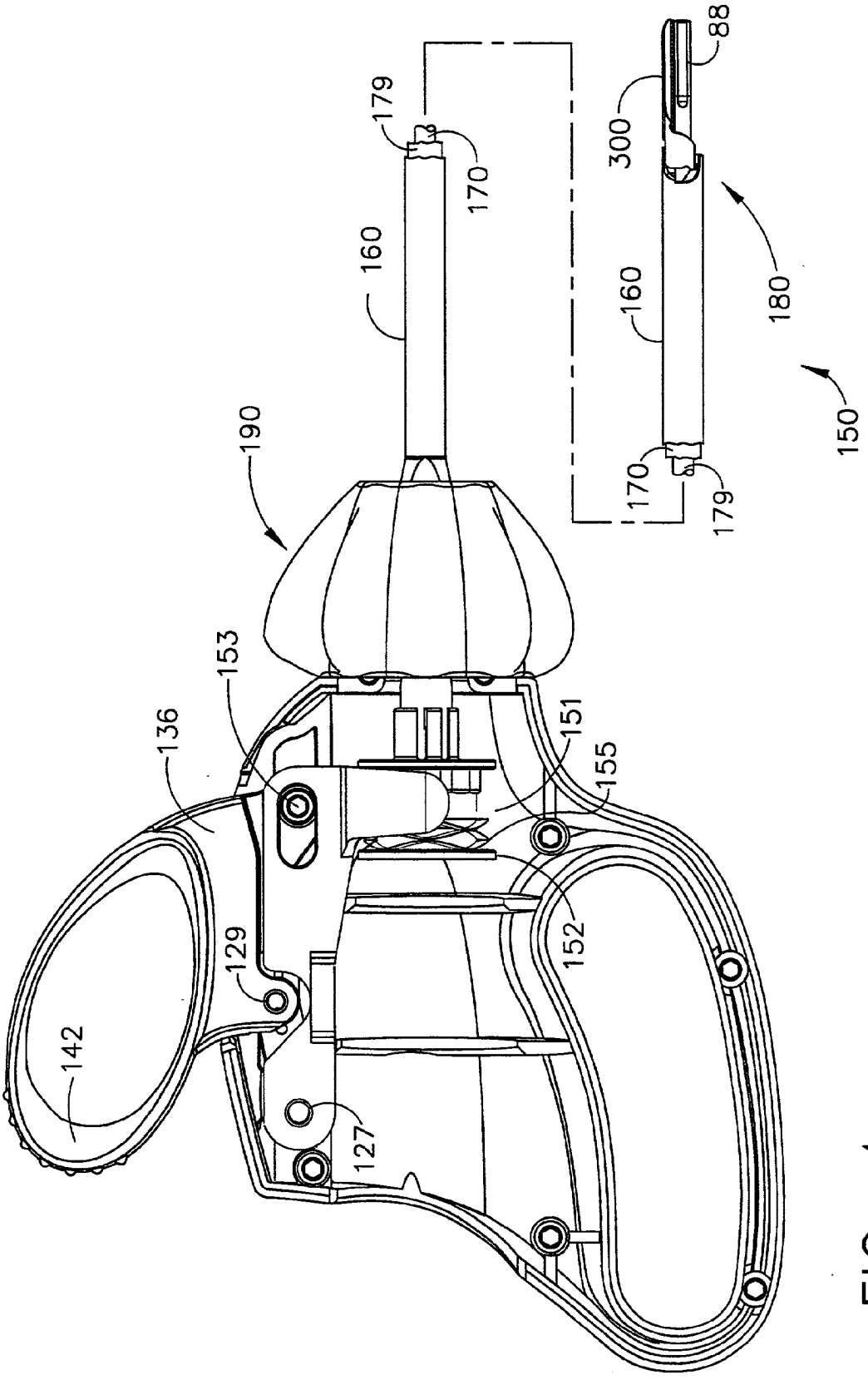

FIG. 4

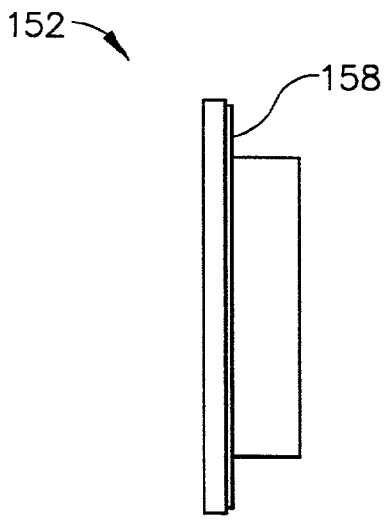

FIG. 5

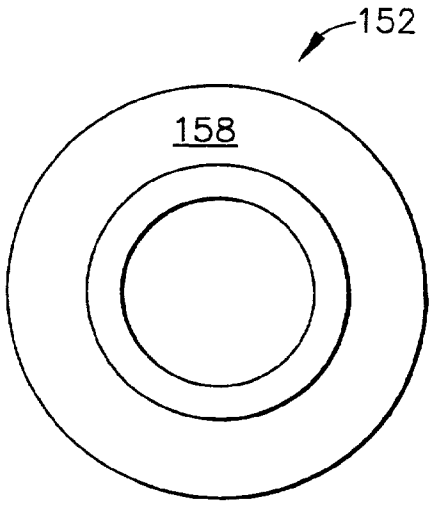

FIG. 6

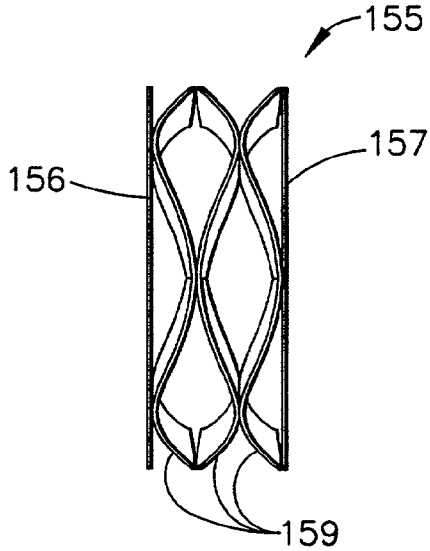

FIG. 7

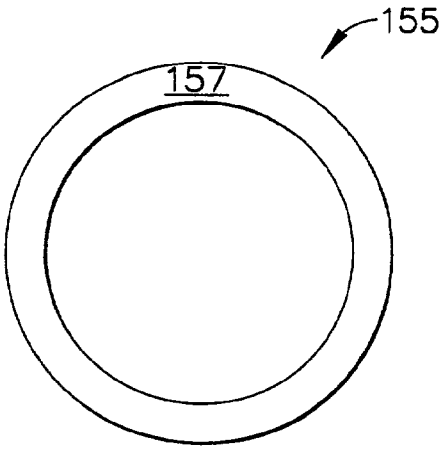

FIG. 8

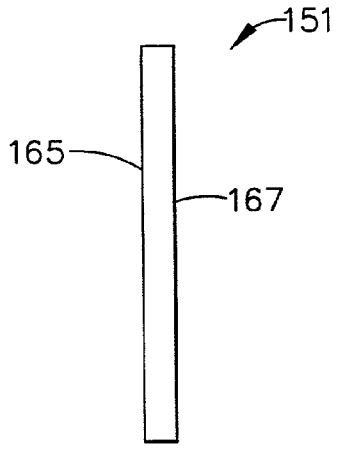

FIG. 9

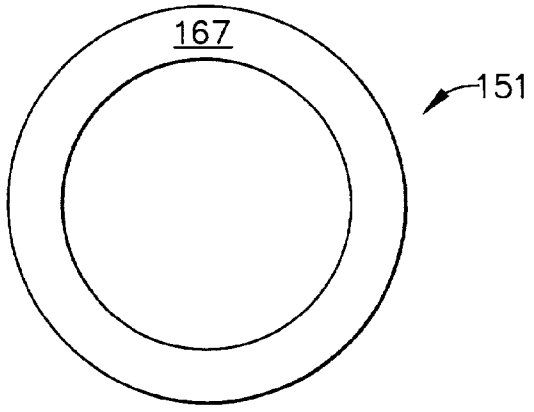

FIG. 10

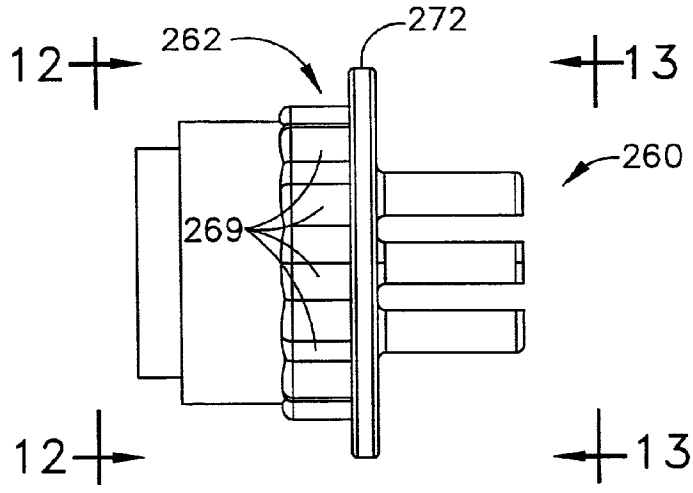

FIG. 11

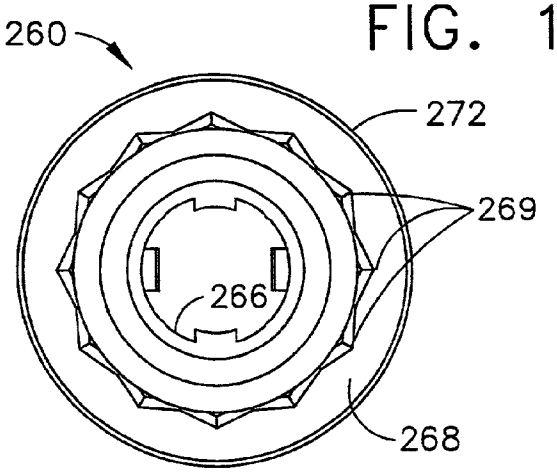

FIG. 12

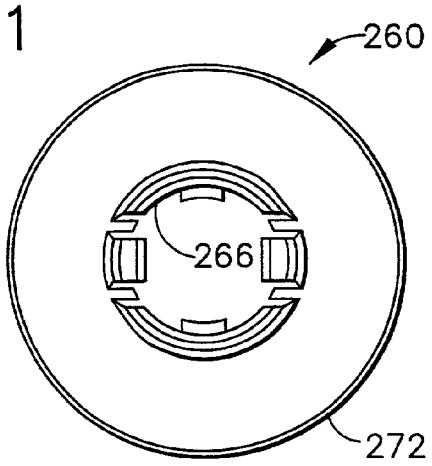

FIG. 13

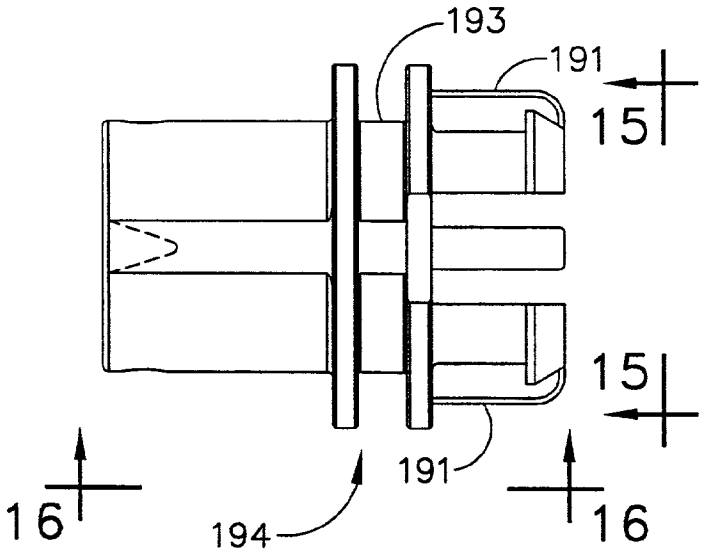

FIG. 14

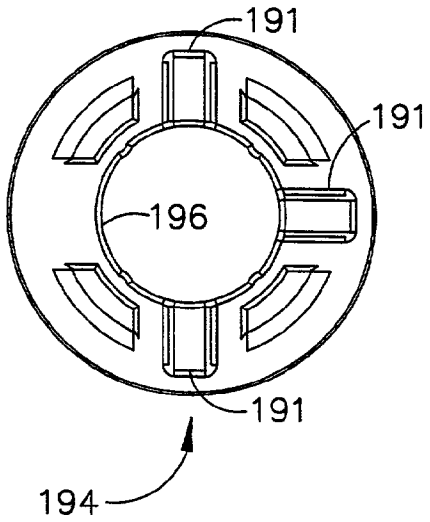

FIG. 15

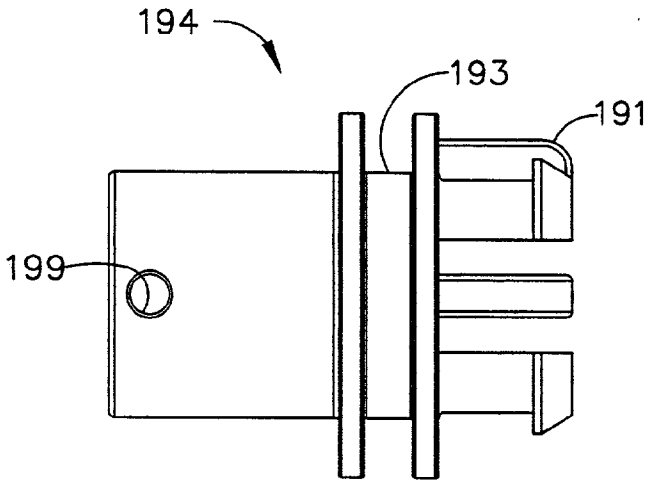

FIG. 16

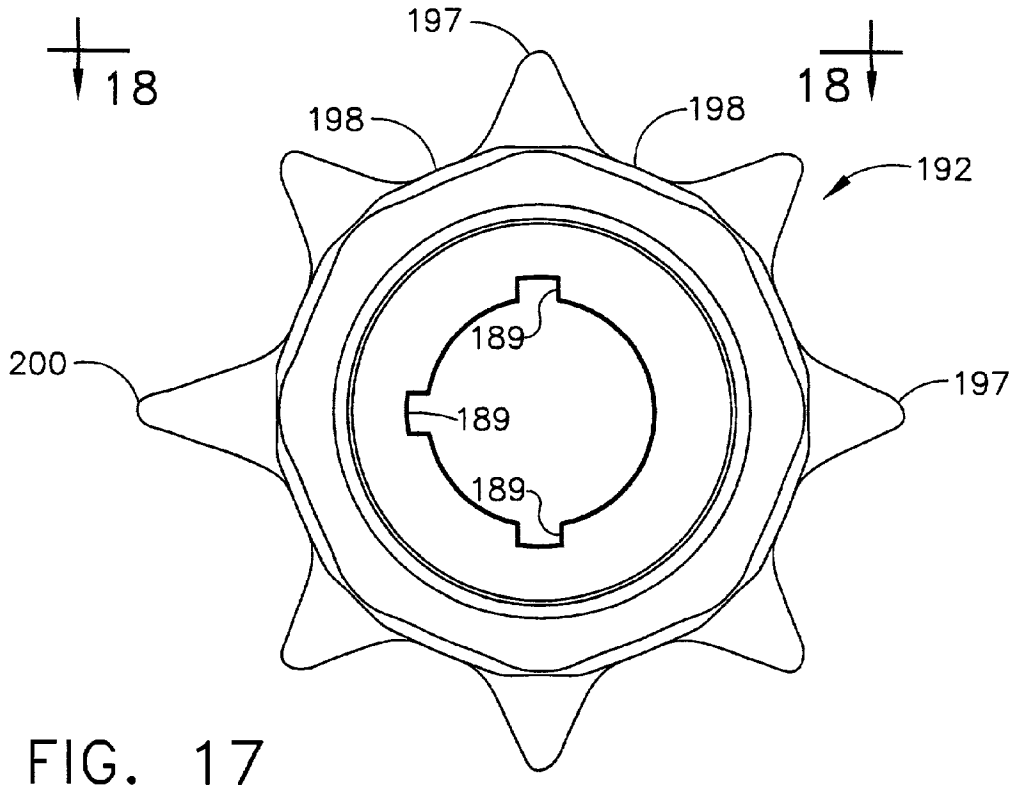

FIG. 17

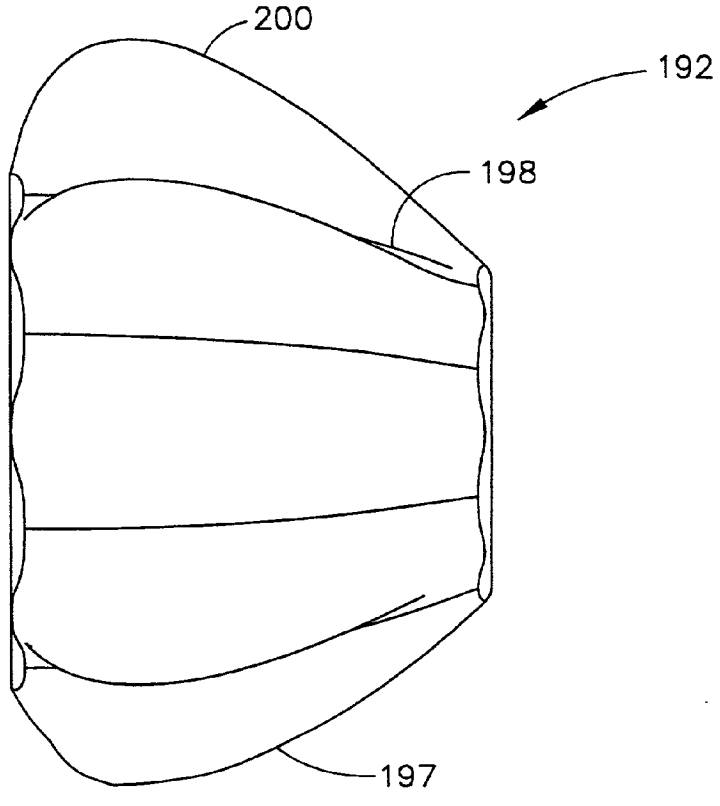

FIG. 18

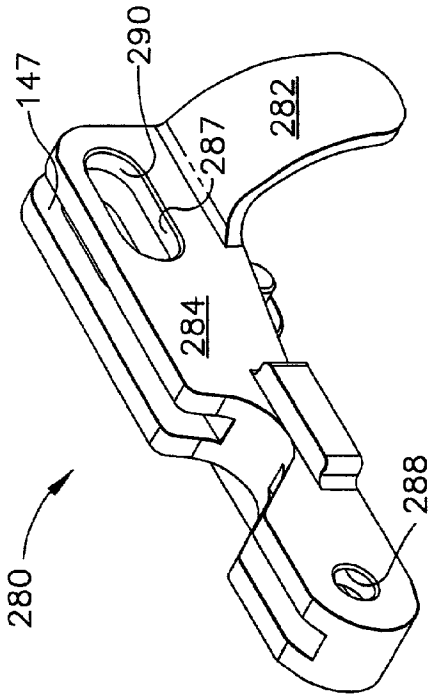

FIG. 22

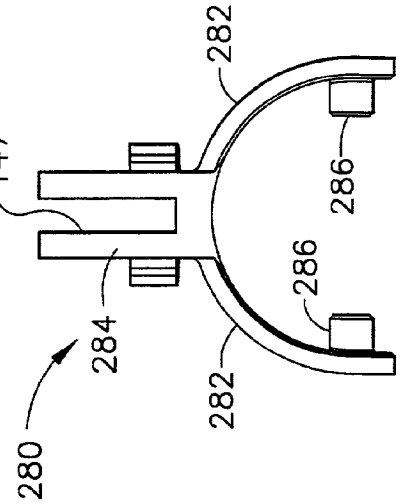

FIG. 21

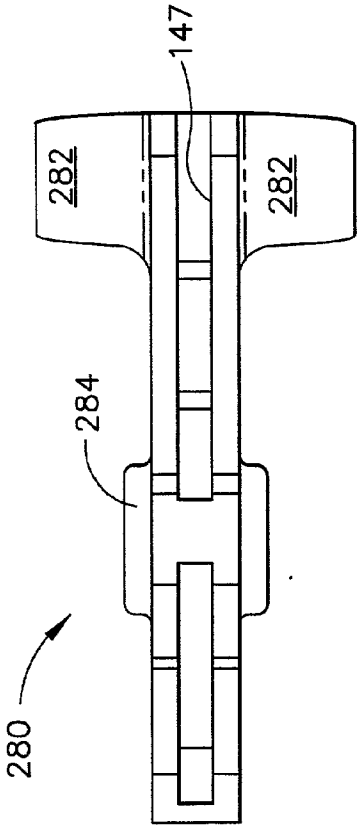

FIG. 19

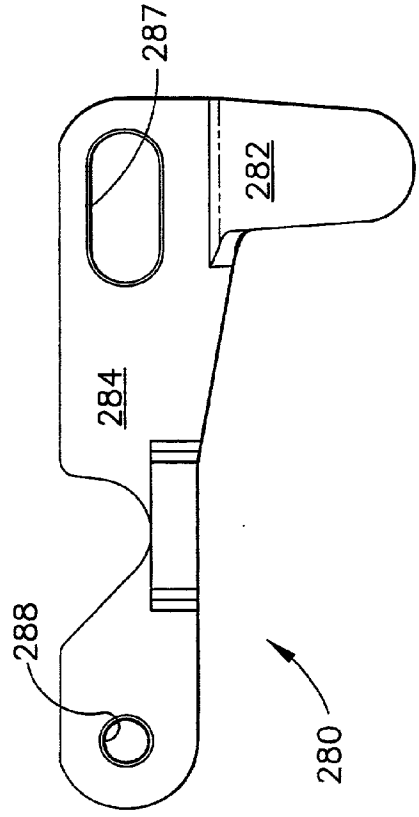

FIG. 20

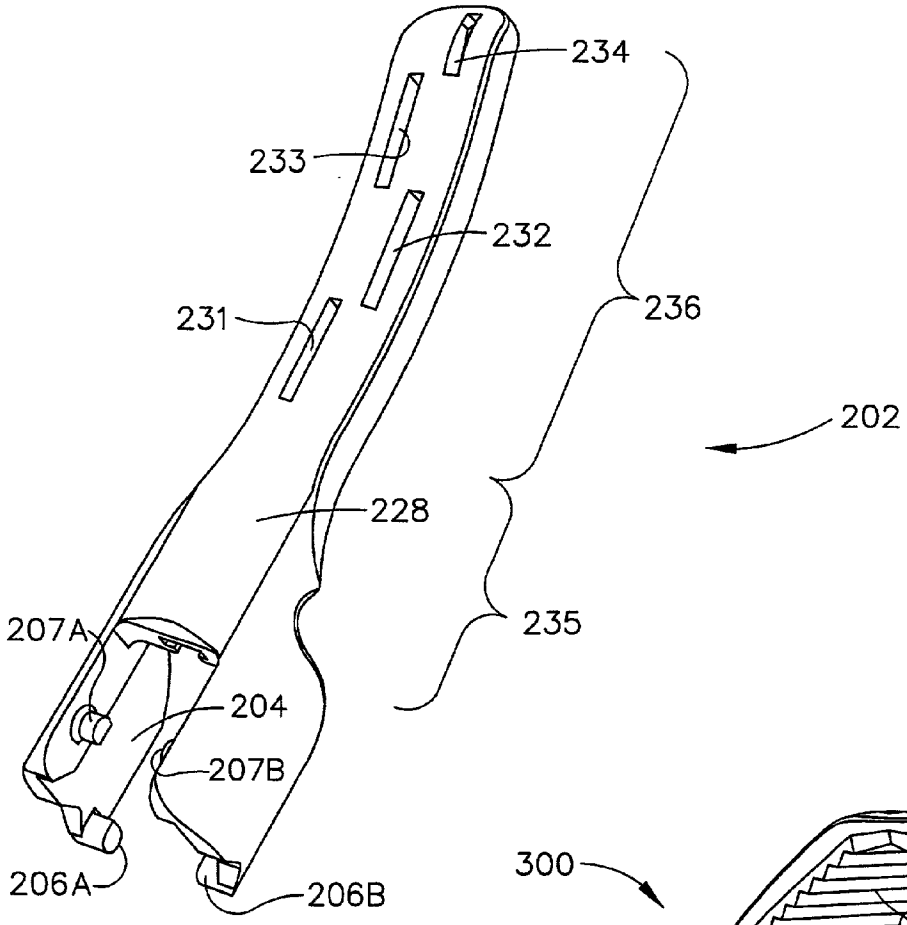
234
233
232
231
236
202
228
235
207A
204
207B
206A
206B

FIG. 24

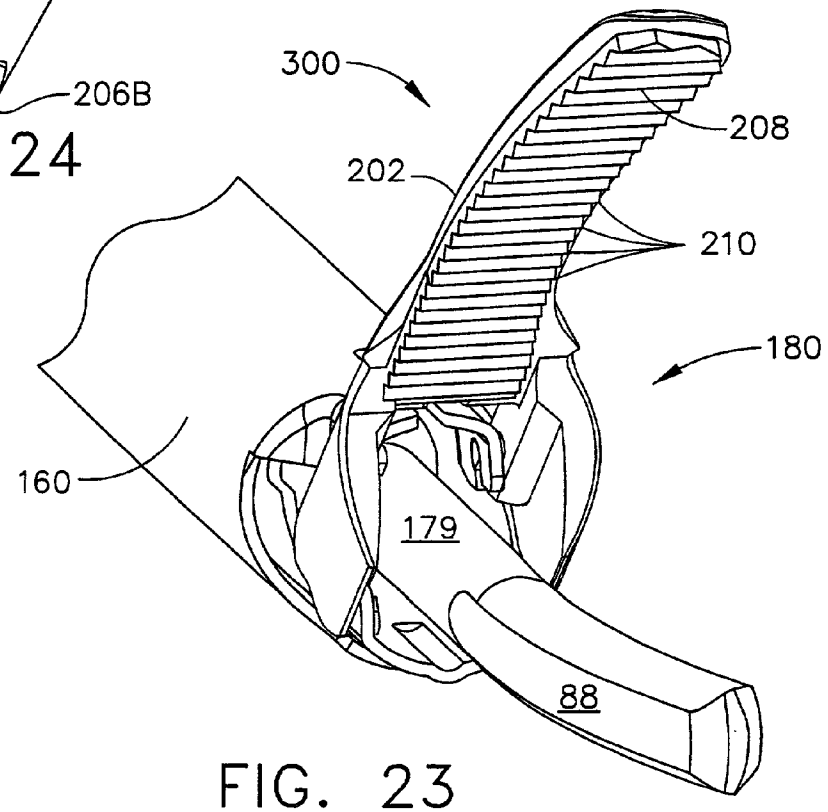
300
208
202
210
180
160
179
88

FIG. 23

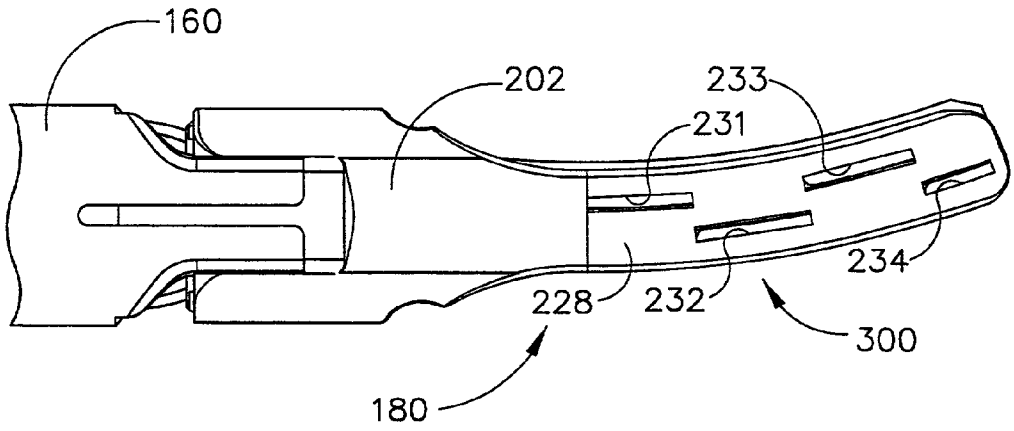
160
202
233
231
234
228
232
300
180

FIG. 25

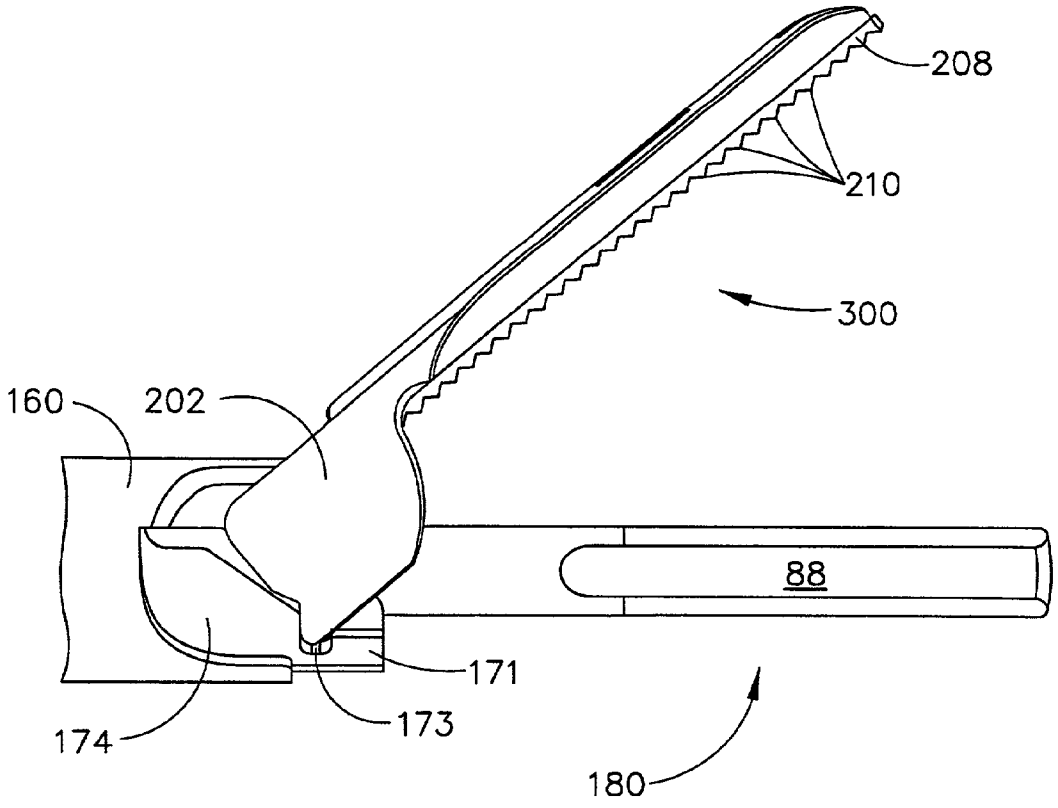
208
210
300
160
202
88
171
173
174
180

FIG. 26

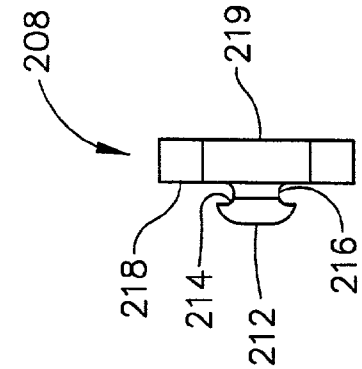

FIG. 29

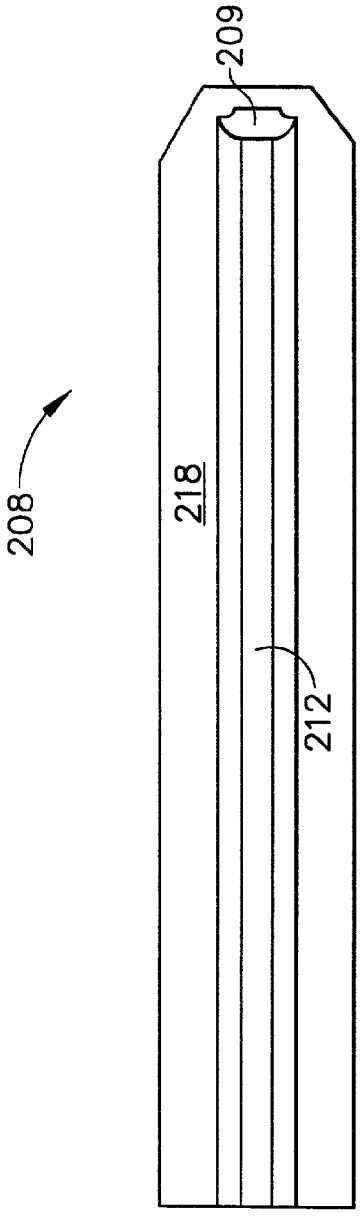

FIG. 27

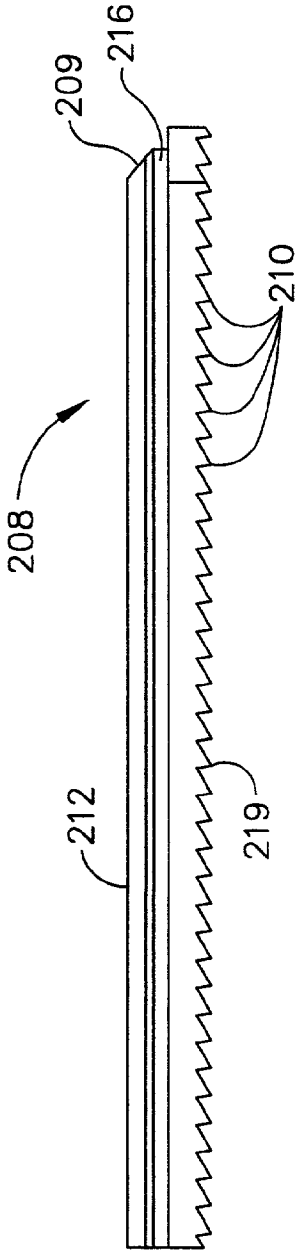

FIG. 28

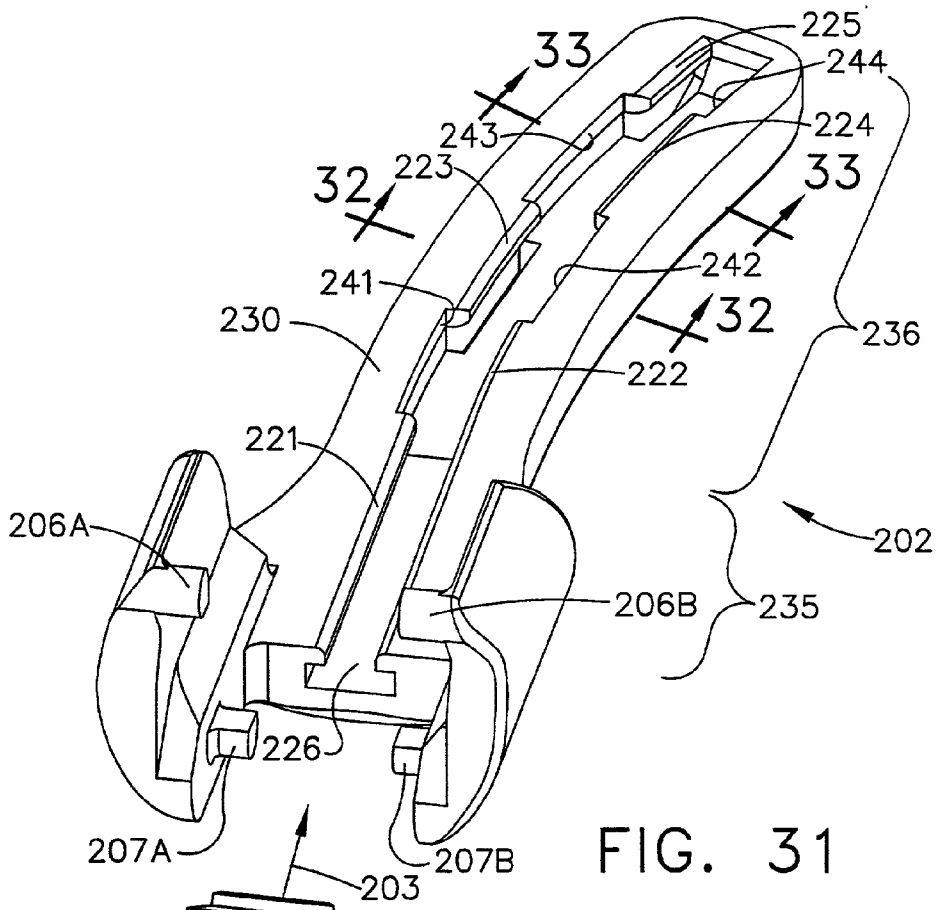
225
33
244
243
224
32
223
33
241
242
230
32
236
222
221
206A
202
206B
235
226
207A
207B
203

FIG. 31

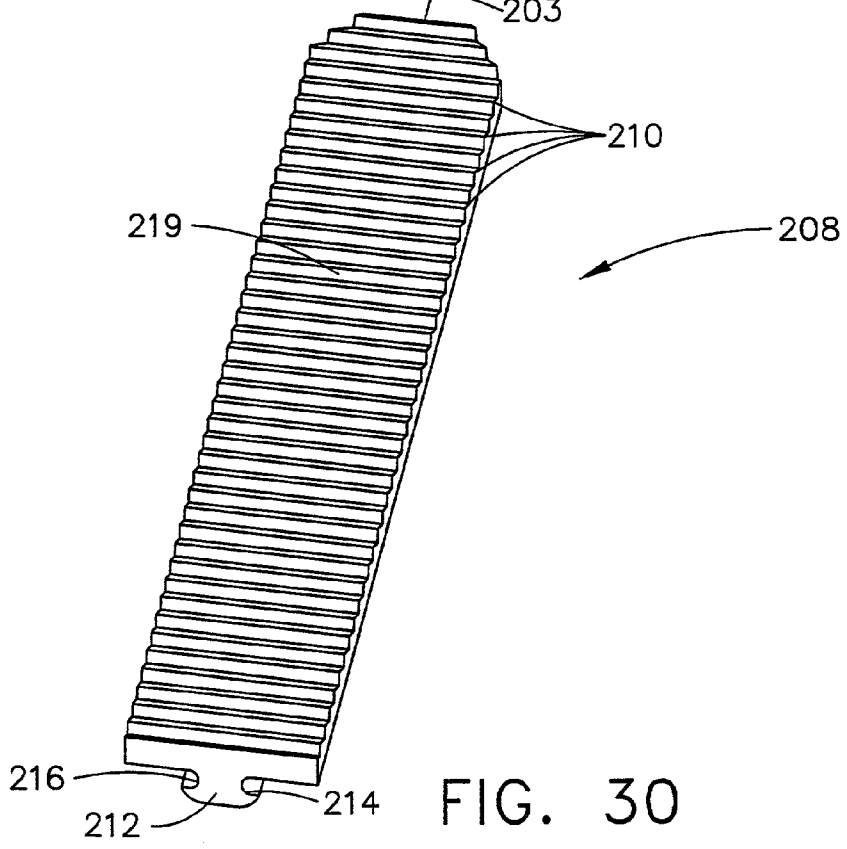
210
219
208
216
214
212

FIG. 30

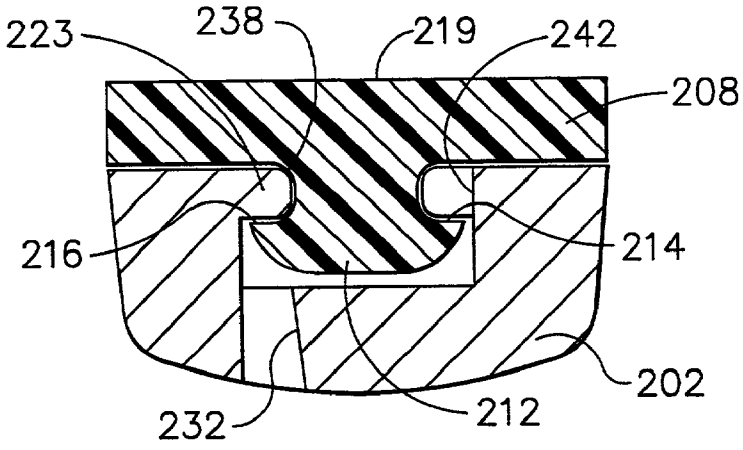
223
238
219
242
208
216
214
202
232
212

FIG. 32

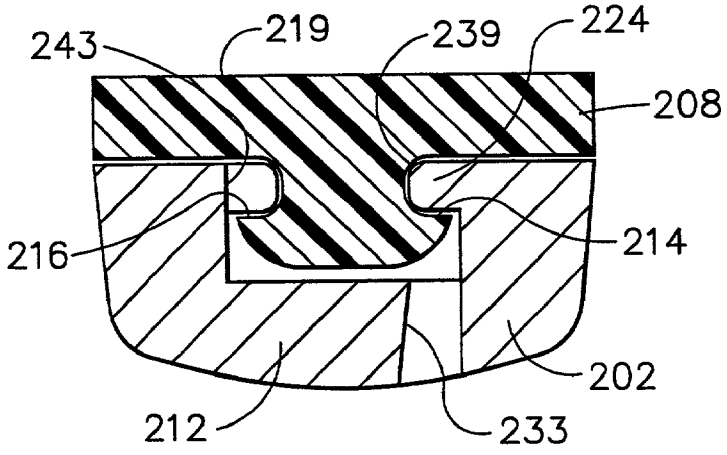
243
219
239
224
208
216
214
202
212
233

FIG. 33

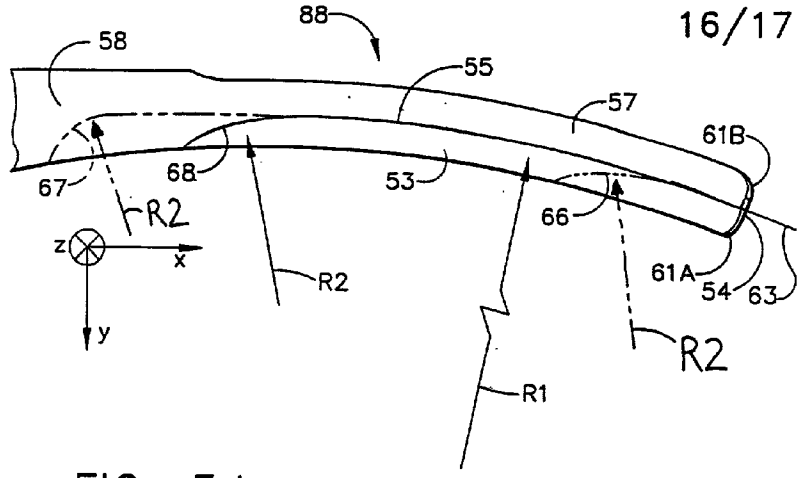

FIG. 34

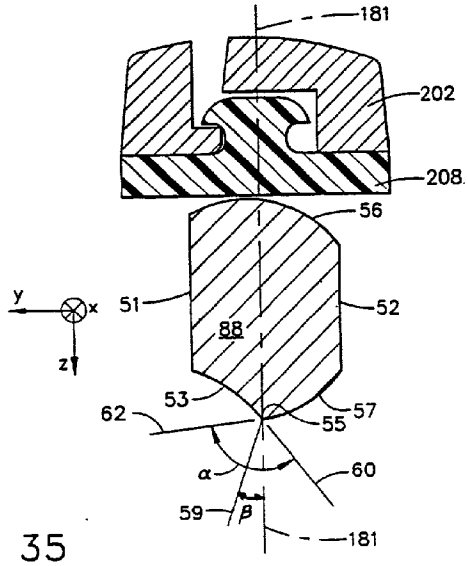

FIG. 35

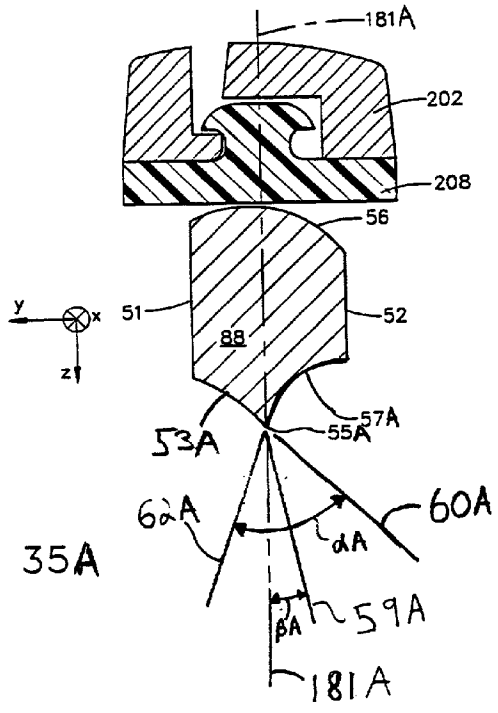

FIG. 35A

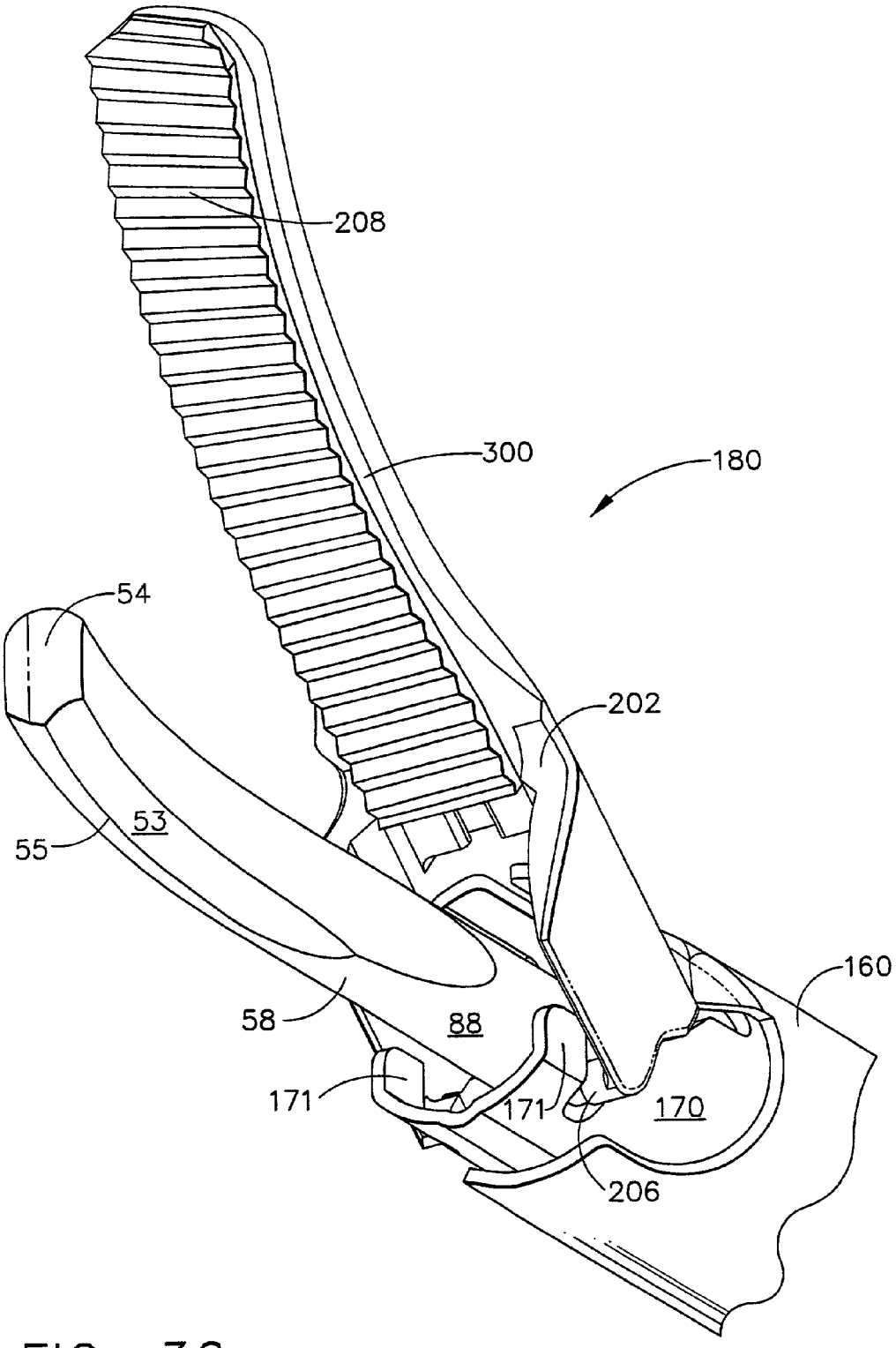

FIG. 36

BLADES WITH FUNCTIONAL BALANCE ASYMMETRIES FOR USE WITH ULTRASONIC SURGICAL INSTRUMENTS

[0001] This application is related to the following copending patent applications: application Ser. No. 08/948,625 filed Oct. 10, 1997; application Ser. No. 08/949,133 filed Oct. 10, 1997; application Ser. No. 09/106,686 filed Jun. 29, 1998; application Ser. No. 09/337,077 filed Jun. 21, 1999; application Ser. No. _____ [Attorney Docket No. END-610]; application Ser. No. _____ [Attorney Docket No. END-616]; and application Ser. No. _____ [Attorney Docket No. END-618] which are hereby incorporated herein by reference.

FIELD OF THE INVENTION

[0002] The present invention relates, in general, to ultrasonic surgical instruments and, more particularly, to multifunctional curved blades with functional asymmetries for use with ultrasonic surgical instruments to minimize undesirable motion.

BACKGROUND OF THE INVENTION

[0003] Ultrasonic instruments, including both hollow core and solid core instruments, are used for the safe and effective treatment of many medical conditions. Ultrasonic instruments, and particularly solid core ultrasonic instruments, are advantageous because they may be used to cut and/or coagulate organic tissue using energy in the form of mechanical vibrations transmitted to a surgical end-effector at ultrasonic frequencies. Ultrasonic vibrations, when transmitted to organic tissue at suitable energy levels and using a suitable end-effector, may be used to cut, dissect, or cauterize tissue. Ultrasonic instruments utilizing solid core technology are particularly advantageous because of the amount of ultrasonic energy that may be transmitted from the ultrasonic transducer through the waveguide to the surgical end-effector. Such instruments are particularly suited for use in minimally invasive procedures, such as endoscopic or laparoscopic procedures, wherein the end-effector is passed through a trocar to reach the surgical site.

[0004] Ultrasonic vibration is induced in the surgical end-effector by, for example, electrically exciting a transducer which may be constructed of one or more piezoelectric or magnetostrictive elements in the instrument hand piece. Vibrations generated by the transducer section are transmitted to the surgical end-effector via an ultrasonic waveguide extending from the transducer section to the surgical end-effector. The waveguides and end-effectors are designed to resonate at the same frequency as the transducer. Therefore, when an end-effector is attached to a transducer the overall system frequency is still the same frequency as the transducer itself.

[0005] The amplitude of the longitudinal ultrasonic vibration at the tip, d, behaves as a simple sinusoid at the resonant frequency as given by:

$$d=A\sin(\omega t) \qquad \text{(equation 1)}$$

[0006] where:

[0007] ω=the radian frequency which equals 2π times the cyclic frequency, f; and

[0008] A=the zeto-peak amplitude.

[0009] The longitudal excursion is defined as the peak-to-peak (p-t-p) amplitude, which is just twice the amplitude of the sine wave or 2A.

[0010] Solid core ultrasonic surgical instruments may be divided into two types, single element end-effector devices and multiple-element end-effector. Single element end-effector devices include instruments such as scalpels, and ball coagulators, see, for example, U.S. Pat. No. 5,263,957. While such instruments as disclosed in U.S. Pat. No. 5,263,957 have been found eminently satisfactory, there are limitations with respect to their use, as well as the use of other ultrasonic surgical instruments. For example, single-element end-effector instruments have limited ability to apply blade-to-tissue pressure when the tissue is soft and loosely supported. Substantial pressure is necessary to effectively couple ultrasonic energy to the tissue. This inability to grasp the tissue results in a further inability to fully coapt tissue surfaces while applying ultrasonic energy, leading to less-than-desired hemostasis and tissue joining.

[0011] The use of multiple-element end-effectors such as clamping coagulators include a mechanism to press tissue against an ultrasonic blade, that can overcome these deficiencies. A clamp mechanism disclosed as useful in an ultrasonic surgical device has been described in U.S. Pat. Nos. 3,636,943 and 3,862,630 to Balamuth. Generally, however, the Balamuth device, as disclosed in those patents, does not coagulate and cut sufficiently fast, and lacks versatility in that it cannot be used to cut/coagulate without the clamp because access to the blade is blocked by the clamp.

[0012] Ultrasonic clamp coagulators such as, for example, those disclosed in U.S. Pat. Nos. 5,322,055 and 5,893,835 provide an improved ultrasonic surgical instrument for cutting/coagulating tissue, particularly loose and unsupported tissue, wherein the ultrasonic blade is employed in conjunction with a clamp for applying a compressive or biasing force to the tissue, whereby faster coagulation and cutting of the tissue, with less attenuation of blade motion, are achieved.

[0013] Improvements in technology of curved ultrasonic instruments such as described in U.S. patent application Ser. No. 09/106,686 previously incorporated herein by reference, have created needs for improvements in other aspects of curved clamp coagulators. For example, U.S. Pat. No. 5,873,873 describes an ultrasonic clamp coagulating instrument having an end-effector including a clamp arm comprising a tissue pad. In the configuration shown in U.S. Pat. No. 5,873,873 the clamp arm and tissue pad are straight.

[0014] The shape of an ultrasonic surgical blade or end-effector used in a clamp coagulator device defines at least four important aspects of the instrument. These are: (1) the visibility of the end-effector and its relative position in the surgical field, (2) the ability of the end-effector to access or approach targeted tissue, (3) the manner m which ultrasonic energy is coupled to tissue for cutting and on, and (4) the manner in which tissue can be manipulated with the ultrasonically inactive end-effector. It would be advantageous to provide an improved ultrasonic clamp coagulator optimizing these four aspects of the instrument.

[0015] However, as feats are added to ultrasonic surgical instrument blades, the altered shape and asymmetries cause

the blade to become unbalanced, meaning that the blade has the tendency to vibrate in directions other than the longitudinal direction along the length of the instrument. U.S. patent application Ser. No. 09/106,686 previously incorporated herein by reference, addressed balancing blades proximal to functional asymmetries using balance asymmetries. While U.S. patent application Ser. No. 09/106,686 has proven eminently successful at balancing blades and waveguides proximal to the balance asymmetry, there are some applications where some balancing may be desirable within the functional portion of an asymmetric blade.

[0016] It would be desirable to provide a balanced ultrasonic surgical instrument blade within the functional area of the blade to optimize instrument performance. The blade described herein has been developed to address this desire.

SUMMARY OF THE INVENTION

[0017] Disclosed is an ultrasonic surgical instrument that combines end-effector geometry to best affect the multiple functions of a shears-type configuration. The shape of the blade is characterized by a radiused cut offset by some distance to form a curved geometry. The cut creates a curved surface with multiple asymmetries causing multiple imbalances within the blade. Imbalance due to the curve of the instrument is corrected by a non-functional asymmetry proximal to the functional asymmetry. Imbalance due to the asymmetric cross-section of the blade is corrected by the appropriate selection of the volume and location of material removed from a functional asymmetry. The shape of the blade in one embodiment of the present invention is characterized by two radiused cuts offset by some distance to form a curved and potentially tapered geometry. These two cuts create curved surfaces including a concave surface and a convex surface. The length of the radiused cuts affects, in part, the acoustic balancing of the transverse motion induced by the curved shape.

BRIEF DESCRIPTION OF THE DRAWINGS

[0018] The novel features of the invention are set forth with particularity in the appended claims. The invention itself, however, both as to organization and methods of operation, together with further objects and advantages thereof, may best be understood by reference to the following description, taken in conjunction with the accompanying drawings in which:

[0019] **FIG. 1** illustrates an ultrasonic surgical system including an elevational view of an ultrasonic generator, a sectioned plan view of an ultrasonic transducer, and a partially sectioned plan view of a clamp coagulator in accordance with the present invention;

[0020] **FIG. 2A** is an exploded perspective view of a portion of a clamp coagulator in accordance with the present invention;

[0021] **FIG. 2B** is an exploded perspective view of a portion of a clamp coagulator in accordance with the present invention;

[0022] **FIG. 3** is a partially sectioned plan view of a clamp coagulator in accordance with the present invention with the clamp arm assembly shown in an open position;

[0023] **FIG. 4** is a partially sectioned plan view of a clamp coagulator in accordance with the present invention with the clamp arm assembly shown in a closed position;

[0024] **FIG. 5** is a side view of a collar cap of the clamp coagulator;

[0025] **FIG. 6** is a front view of a collar cap of the clamp coagulator;

[0026] **FIG. 7** is a side view of a force limiting spring of the clamp coagulator;

[0027] **FIG. 8** is a front view of a force limiting spring of the clamp coagulator;

[0028] **FIG. 9** is a side view of a washer of the clamp coagulator;

[0029] **FIG. 10** is a front view of a washer of the clamp coagulator;

[0030] **FIG. 11** is a side view of a tubular collar of the clamp coagulator;

[0031] **FIG. 12** is a rear view of a tubular collar of the clamp coagulator;

[0032] **FIG. 13** is a front view of a tubular collar of the clamp coagulator;

[0033] **FIG. 14** is a side view of an inner knob of the clamp coagulator;

[0034] **FIG. 15** is a front view of an inner knob of the clamp coagulator;

[0035] **FIG. 16** is a bottom view of an inner knob of the clamp coagulator;

[0036] **FIG. 17** is a rear view of an outer knob of the clamp coagulator;

[0037] **FIG. 18** is a top view of an outer knob of the clamp coagulator;

[0038] **FIG. 19** is a top view of a yoke of the clamp coagulator;

[0039] **FIG. 20** is a side view of a yoke of the clamp coagulator;

[0040] **FIG. 21** is a front view of a yoke of the clamp coagulator;

[0041] **FIG. 22** is a perspective view of a yoke of the clamp coagulator;

[0042] **FIG. 23** is a perspective view of an end-effector of the clamp coagulator;

[0043] **FIG. 24** is a top perspective view of a clamp arm of the camp coagulator;

[0044] **FIG. 25** is a top view of an end-effector of the clamp coagulator;

[0045] **FIG. 26** is a side view of an end-effector of the clamp coagulator with the clamp arm open;

[0046] **FIG. 27** is a top view of a tissue pad of the clamp coagulator;

[0047] **FIG. 28** is a side view of a tissue pad of the clamp coagulator;

[0048] **FIG. 29** is a front view of a tissue pad of the clamp coagulator;

[0049] **FIG. 30** is a perspective view of a tissue pad of the clamp coagulator;

[0050] **FIG. 31** is a bottom perspective view of a clamp arm of the clamp coagulator;

[0051] **FIG. 32** is a first cross-sectional view of the clamp arm illustrated in **FIG. 31**;

[0052] **FIG. 33** is a second cross-sectional view of the clamp arm illustrated in **FIG. 31**;

[0053] **FIG. 34** is a bottom plan view of a blade of the clamp coagulator;

[0054] **FIG. 35** is a cross-sectional view of a blade of the clamp coagulator;

[0055] **FIG. 35A** is a cross-sectional view of an alternate embodiment of a blade of the clamp coagulator; and

[0056] **FIG. 36** is a perspective view of an end-effector of the clamp coagulator.

DETAILED DESCRIPTION OF THE INVENTION

[0057] The present invention will be described in combination with ultrasonic instruments as described herein. Such description is exemplary only, and is not intended to limit the scope and applications of the invention. For example, the invention is useful in combination with a multitude of ultrasonic instruments including those described in, for example, U.S. Pat. Nos. 5,938,633; 5,935,144; 5,944,737; 5,322,055, 5,630,420; and 5,449,370.

[0058] **FIG. 1** illustrates ultrasonic system **10** comprising an ultrasonic signal generator **15** with ultrasonic transducer **82**, hand piece housing **20**, and clamp coagulator **120** in accordance with the present invention. Clamp coagulator **120** may be used for open or laparoscopic surgery. The ultrasonic transducer **82**, which is known as a "Langevin stack", generally includes a transduction portion **90**, a first resonator or end-bell **92**, and a second resonator or fore-bell **94**, and ancillary components. The ultrasonic transducer **82** is preferably an integral number of one-half system wavelengths ($n\lambda/2$) in length as will be described in more detail later. An acoustic assembly **80** includes the ultrasonic transducer **82**, mount **36**, velocity transformer **64** and surface **95**.

[0059] The distal end of end-bell **92** is connected to the proximal end of transduction portion **90**, and the proximal end of fore-bell **94** is connected to the distal end of transduction portion **90**. Fore-bell **94** and end-bell **92** have a length determined by a number of variables, including the thickness of the transduction portion **90**, the density and modulus of elasticity of the material used to manufacture end-bell **92** and fore-bell **94**, and the resonant frequency of the ultrasonic transducer **82**. The fore-bell **94** may be tapered inwardly from its proximal end to its distal end to amplify the ultrasonic vibration amplitude as velocity transformer **64**, or alternately may have no amplification.

[0060] The piezoelectric elements **100** may be fabricated from any suitable material, such as, for example, lead zirconate-titanate, lead meta-niobate, lead titanate, or other piezoelectric crystal material. Each of the positive electrodes **96**, negative electrodes **98**, and piezoelectric elements **100** has a bore extending through the center. The positive and negative electrodes **96** and **98** are electrically coupled to wires **102** and **104**, respectively. Wires **102** and **104** are encased within cable **25** and electrically connectable to ultrasonic signal generator **15** of ultrasonic system **10**.

[0061] Ultrasonic transducer **82** of the acoustic assembly **80** converts the electrical signal from ultrasonic signal generator **15** into mechanical energy that results in primarily longitudinal vibratory motion of the ultrasonic transducer **82** and an end-effector **180** at ultrasonic frequencies. A suitable generator is available as model number GEN01, from Ethicon Endo-Surgery, Inc., Cincinnati, Ohio. When the acoustic assembly **80** is energized, a vibratory motion standing wave is generated through the acoustic assembly **80**. The amplitude of the vibratory motion at any point along the acoustic assembly **80** depends on the location along the acoustic assembly **80** at which the vibratory motion is measured. A minimum or zero crossing in the vibratory motion standing wave is generally referred to as a node (i.e., where motion is usually minimal), and an absolute value maximum or peak in the standing wave is generally referred to as an anti-node. The distance between an anti-node and its nearest node is one-quarter wavelength ($\lambda/4$).

[0062] Wires **102** and **104** transmit the electrical signal from the ultrasonic signal generator **15** to positive electrodes **96** and negative electrodes **98**. The piezoelectric elements **100** are energized by an electrical signal supplied from the ultrasonic signal generator **15** in response to a foot switch **118** to produce an acoustic standing wave in the acoustic assembly **80**. The electrical signal causes disturbances in the piezoelectric elements **100** in the form of repeated small displacements resulting in large compression forces within the material. The repeated small displacements cause the piezoelectric elements **100** to expand and contract in a continuous manner along the axis of the voltage gradient, producing longitudinal waves of ultrasonic energy. The ultrasonic energy is transmitted through the acoustic assembly **80** to the end-effector **180**.

[0063] In order for the acoustic assembly **80** to deliver energy to end-effector **180**, all components of acoustic assembly **80** must be acoustically coupled to the ultrasonically active portions of clamp coagulator **120**. The distal end of the ultrasonic transducer **82** may be acoustically coupled at surface **95** to the proximal end of an ultrasonic waveguide **179** by a threaded connection such as stud **50**.

[0064] The components of the acoustic assembly **80** are preferably acoustically tuned such that the length of any assembly is an integral number of one-half wavelengths ($n\lambda/2$), where the wavelength λ is the wavelength of a pre-selected or operating longitudinal vibration drive frequency f_d of the acoustic assembly **80**, and where n is any positive integer. It is also contemplated that the acoustic assembly **80** may incorporate any suitable arrangement of acoustic elements.

[0065] Referring now to **FIGS. 2A and 2B**, a clamp coagulator **120** of the surgical system **10** in accordance with the present invention is illustrated. The clamp coagulator **120** is preferably attached to and removed from the acoustic assembly **80** as a unit. The proximal end of the clamp coagulator **120** preferably acoustically couples to the distal surface **95** of the acoustic assembly **80** as shown in **FIG. 1**. It will be recognized that the clamp coagulator **120** may be coupled to the acoustic assembly **80** by any suitable means.

[0066] The clamp coagulator **120** preferably includes an instrument housing **130**, and an elongated member **150**. The

elongated member **150** can be selectively rotated with respect to the instrument housing **130** as further described below. The instrument housing **130** includes a pivoting handle portion **136**, and a fixed handle **132**A and **132**B, coupled to a left shroud **134** and a right shroud **138** respectively.

[**0067**] The right shroud **138** is adapted to snap fit on the left shroud **134**. The right shroud **138** is preferably coupled to the left shroud **134** by a plurality of inwardly facing prongs **70** formed on the right shroud **138**. The plurality of prongs **70** are arranged for engagement in corresponding holes or apertures **140**, which are formed in the left shroud **134**. When the left shroud **134** is attached to the right shroud **138**, a cavity is formed therebetween to accommodate various components, such as an indexing mechanism **255** as further described below.

[**0068**] The left shroud **134**, and the right shroud **138** of the clamp coagulator **120** are preferably fabricated from polycarbonate. It is contemplated that these components may be made from any suitable material without departing from the spirit and scope of the invention.

[**0069**] Indexing mechanism **255** is disposed in the cavity of the instrument housing **130**. The indexing mechanism **255** is preferably coupled or attached on inner tube **170** to translate movement of the handle portion **136** to linear motion of the inner tube **170** to open and close the clamp arm assembly **300**. When the pivoting handle portion **136** is moved toward the fixed handle portion **130**, the indexing mechanism **255** slides the inner tube **170** rearwardly to pivot the clamp arm assembly **300** into a closed position. The movement of the pivoting handle portion **136** in the opposite direction slides the indexing mechanism **255** to displace the inner tube **170** in the opposite direction, i.e., forwardly, and hence pivot the clamp arm assembly **300** into its open position.

[**0070**] The indexing mechanism **255** also provides a ratcheting mechanism to allow the elongated member **150** to rotate about its longitudinal axis relative to instrument housing **130**. The rotation of the elongated member **150** enables the clamp arm assembly **300** to be turned to a selected or desired angular position. The indexing mechanism **255** preferably includes a tubular collar **260** and yoke **280**.

[**0071**] The tubular collar **260** of the indexing mechanism **255** is preferably snapped onto the proximal end of the inner tube **170** and keyed into opposing openings **168**. The tubular collar **260** is preferably fabricated from polyetherimide. It is contemplated that the tubular collar **260** may be constructed from any suitable material.

[**0072**] Tubular collar **260** is shown in greater detail in **FIGS. 11 through 13**. The tubular collar **260** preferably includes an enlarged section **262**, and a bore **266** extending therethrough. The enlarged section **262** preferably includes a ring **272** formed around the periphery of the tubular collar **260** to form groove **268**. The groove **268** has a plurality of detents or teeth **269** for retaining the elongated member **150** in different rotational positions as the elongated member **150** is rotated about its longitudinal axis. Preferably, the groove **268** has twelve ratchet teeth to allow the elongated portion to be rotated in twelve equal angular increments of approximately 30 degrees. It is contemplated that the tubular collar **260** may have any number of teeth-like members. It will be recognized that the teeth-like members may be disposed on any suitable part of the tubular collar **260** without departing from the scope and spirit of the present invention.

[**0073**] Referring back now to **FIGS. 2A through 4**, the pivoting handle portion **136** includes a thumb loop **142**, a first hole **124**, and a second hole **126**. A pivot pin **153** is disposed through first hole **124** of handle portion **136** to allow pivoting as shown by arrow **121** in **FIG. 3**. As thumb loop **142** of pivoting handle portion **136** is moved in the direction of arrow **121**, away from instrument housing **130**, a link **128** applies a forward force to yoke **280**, causing yoke **280** to move forward. Link **128** is connected to pivoting handle portion **136** by a pin **129**, and link **128** is connected to base **284** by a pin **127**.

[**0074**] Referring back now to **FIG. 2**A, yoke **280** generally includes a holding or supporting member **282** and a base **284**. The supporting member **282** is preferably semicircular and has a pair of opposing pawls **286** that extend inwardly to engage with the teeth **269** of the tubular collar **260**. It is contemplated that the pawls **286** may be disposed on any suitable part of the yoke **280** for engagement with the teeth **269** of the tubular collar **260** without departing from the spirit and scope of the invention. It will also be recognized that the yoke **280** may have any number of ratchet arms.

[**0075**] Yoke **280** is shown in greater detail in **FIGS. 19 through 22**. The pivoting handle portion **136** preferably is partially disposed in a slot **147** of the base **284** of the yoke **280**. The base **284** also includes a base opening **287**, an actuator travel stop **290**, and a base pin-hole **288**. The pivot pin **153** is disposed through the base opening **287**. Yoke **280** pawls **286** transfer opening force to inner tube **170** through tubular collar **260**, resulting in the opening of clamp arm assembly **300**.

[**0076**] The yoke **280** of the clamp coagulator **120** is preferably fabricated from polycarbonate. The yoke **280** may also be made from a variety of materials including other plastics, such as ABS, NYLON, or polyetherimide. It is contemplated that the yoke **280** may be constructed from any suitable material without departing from the spirit and scope of the invention.

[**0077**] As illustrated in **FIGS. 3 and 4**, yoke **280** also transfers a closing force to clamp arm assembly **300** as pivoting handle portion **136** is moved toward instrument housing **130**. Actuator travel stop **290** contacts pivot pin **153** at the bottom of the stroke of pivoting handle portion **136**, stopping any further movement, or overtravel, of pivoting handle portion **136**. Pawls **286** of yoke **280** transfer force to tubular collar **260** through a washer **151**, a force limiting spring **155**, and collar cap **152**. Collar cap **152** is rigidly attached to tubular collar **260** after washer **151** and force limiting spring **155** have been assembled onto tubular collar **260** proximal to enlarged section **262**. Collar cap **152** is illustrated in greater detail in **FIGS. 5 and 6**. Force limiting spring **155** is illustrated in greater detail in **FIGS. 7 and 8**, and washer **151** is illustrated in greater detail in **FIGS. 9 and 10**. Thickness of washer **151** may be adjusted during design or manufacturing of clamp coagulator **120** to alter the pre-load of force limiting spring **155**. Collar cap **152** is attached to tubular collar **260** by ultrasonic welding, but may alternately be press fit, snap fit or attached with an adhesive.

[**0078**] Referring to **FIGS. 5 through 10**, tubular collar **260**, washer **151**, force limiting spring **155**, and collar cap

152 provide a force limiting feature to clamp arm assembly **300**. As pivoting handle portion **136** is moved toward instrument housing **130**, clamp arm assembly **300** is rotated toward ultrasonic blade **88**. In order to provide both ultrasonic cutting, and hemostasis, it is desirable to limit the maximum force of clamp arm assembly **300** to 0.5 to 3.0 Lbs.

[**0079**] **FIGS. 5 and 6** illustrate collar cap **152** including a spring surface **158**. **FIGS. 7 and 8** illustrate force limiting spring **155** including a cap surface **156**, a washer surface **157**, and a plurality of spring elements **159**. Force limiting spring **155** is described in the art as a wave spring, due to the shape of spring elements **159**. It is advantageous to use a wave spring for force limiting spring **155** because it provides a high spring rate in a small physical size well suited to an ultrasonic surgical instrument application where a central area is open for ultrasonic waveguide **179**. Force limiting spring **155** is biased between spring surface **158** of collar cap **152** and spring face **165** of washer **151**. Washer **151** includes a pawl face **167** (**FIGS. 9 and 10**) that contacts pawls **286** of yoke **280** after assembly of clamp coagulator **120** (see **FIGS. 2 through 4**).

[**0080**] Referring now to **FIGS. 2A, 2B**, and **FIGS. 14 through 18**, a rotational knob **190** is mounted on the elongated member **150** to turn the elongated member **150** so that the tubular collar **260** rotates with respect to the yoke **280**. The rotational knob **190** may be fabricated from polycarbonate. The rotational knob **190** may also be made from a variety of materials including other plastics, such as a polyetherimide, nylon, or any other suitable material.

[**0081**] The rotational knob **190** preferably has an enlarged section or outer knob **192**, an inner knob **194**, and an axial bore **196** extending therethrough. Inner knob **194** includes keys **191** that attach cooperatively to keyways **189** of outer knob **192**. The outer knob **192** includes alternating longitudinal ridges **197** and grooves **198** that facilitate the orientation of the rotational knob **190** and the elongated member **150** by a surgeon. The axial bore **196** of the rotational knob **190** is configured to snugly fit over the proximal end of the elongated member **150**.

[**0082**] The inner knob **194** extends through an opening **139** in the distal end of the instrument housing **130**. Inner knob **194** includes a channel **193** to rotatably attach inner knob **194** into opening **139**. The inner knob **194** of the rotational knob **190** has a pair of opposing holes **199**. The opposing holes **199** are aligned as part of a passageway **195** that extends through the elongated member **150**, as will be described later.

[**0083**] A coupling member, such as, for example, pin **163**, may be positioned through opposing holes **199** of the passageway **195**. The pin **163** may be held in the passageway **195** of the elongated member **150** by any suitable means, such as, for example, trapped between ribs in housing **130**, or a silicone or cyanoacrylate adhesive. The pin **163** allows rotational torque to be applied to the elongated member **150** from the rotational knob **190** in order to rotate the elongated member **150**.

[**0084**] When the rotational knob **190** is rotated, the teeth **269** of the tubular collar **260** engage and ride up slightly on the corresponding pawls **286** of the yoke **280**. As the pawls **286** ride up on the teeth **269**, the supporting member **282** of the yoke **280** deflects outwardly to allow pawls **286** to slip or pass over the teeth **269** of the tubular collar **260**.

[**0085**] In one embodiment, the teeth **269** of the tubular collar **260** are configured as ramps or wedges, and the pawls **286** of the yoke **280** are configured as posts. The teeth **269** of the tubular collar **260** and the pawls **286** of the yoke **280** may be reversed so that the teeth **269** of the tubular collar **260** are posts, and the pawls **286** of the yoke **280** are ramps or wedges. It is contemplated that the teeth **269** may be integrally formed or coupled directly to the periphery of the elongated member **150**. It will also be recognized that the teeth **269** and the pawls **286** may be cooperating projections, wedges, cam surfaces, ratchet-like teeth, serrations, wedges, flanges, or the like which cooperate to allow the elongated member **150** to be indexed at selective angular positions, without departing from the spirit and scope of the invention.

[**0086**] As illustrated in **FIG. 2**B, the elongated member **150** of the clamp coagulator **120** extends from the instrument housing **130**. As shown in **FIGS. 2B through 4**, the elongated member **150** preferably includes an outer member or outer tube **160**, an inner member or inner tube **170**, and a transmission component or ultrasonic waveguide **179**.

[**0087**] The outer tube **160** of the elongated member **150** preferably includes a hub **162**, a tubular member **164**, and a longitudinal opening or aperture **166** extending therethrough. The outer tube **160** preferably has a substantially circular cross-section and may be fabricated from stainless steel. It will be recognized that the outer tube **160** may be constructed from any suitable material and may have any suitable cross-sectional shape.

[**0088**] The hub **162** of the outer tube **160** preferably has a larger diameter than the tubular member **164** does. The hub **162** has a pair of outer tube holes **161** to receive pin **163** to allow the hub **162** to be coupled to rotational knob **190**. As a result, the outer tube **160** will rotate when the rotational knob **190** is turned or rotated.

[**0089**] The hub **162** of the outer tube **160** also includes wrench flats **169** on opposite sides of the hub **162**. The wrench flats **169** are preferably formed near the distal end of the hub **162**. The wrench flats **169** allow torque to be applied by a torque wrench to the hub **162** to tighten the ultrasonic waveguide **179** to the stud **50** of the acoustic assembly **80**. For example, U.S. Pat. Nos. 5,059,210 and 5,057,119, which are hereby incorporated herein by reference, disclose torque wrenches for attaching and detaching a transmission component to a mounting device of a hand piece assembly.

[**0090**] Located at the distal end of the tubular member **164** of the outer tube **160** is an end-effector **180** for performing various tasks, such as, for example, grasping tissue, cutting tissue and the like. It is contemplated that the end-effector **180** may be formed in any suitable configuration.

[**0091**] End-effector **180** and its components are shown in greater detail in **FIGS. 23 through 33**. The end-effector **180** generally includes a non-vibrating clamp arm assembly **300** to, for example, grip tissue or compress tissue against the ultrasonic blade **88**. The end-effector **180** is illustrated in **FIGS. 23 and 26** in a clamp open position, and clamp arm assembly **300** is preferably pivotally attached to the distal end of the outer tube **160**.

[**0092**] Looking first to **FIGS. 23 through 26**, the clamp arm assembly **300** preferably includes a clamp arm **202**, a

jaw aperture **204**, a first post **206**A, a second post **206**B, and a tissue pad **208**. The clamp arm **202** is pivotally mounted about a pivot pin **207**A and pivot pin **207**B to rotate in the direction of arrow **122** in **FIG. 3** when thumb loop **142** is moved in the direction indicated by arrow **121** in **FIG. 3**. By advancing the pivoting handle portion **136** toward the instrument housing **130**, the clamp arm **202** is pivoted about the pivot pin **207**A and pivot pin **207**B into a closed position. Retracting the pivoting handle portion **136** away from the instrument housing **130** pivots the clamp arm **202** into an open position.

[**0093**] The clamp arm **202** has tissue pad **208** attached thereto for squeezing tissue between the ultrasonic blade **88** and clamp arm assembly **300**. The tissue pad **208** is preferably formed of a polymeric or other compliant material and engages the ultrasonic blade **88** when the clamp arm **202** is in its closed position. Preferably, the tissue pad **208** is formed of a material having a low coefficient of friction but which has substantial rigidity to provide tissue-grasping capability, such as, for example, TEFLON, a trademark name of E. I. Du Pont de Nemours and Company for the polymer polytetraflouroethylene (PTFE). The tissue pad **208** may be mounted to the clamp arm **202** by an adhesive, or preferably by a mechanical fastening arrangement as will be described below.

[**0094**] As illustrated in **FIGS. 23, 26** and **28**, serrations **210** are formed in the clamping surfaces of the tissue pad **208** and extend perpendicular to the axis of the ultrasonic blade **88** to allow tissue to be grasped, manipulated, coagulated and cut without slipping between the clamp arm **202** and the ultrasonic blade **88**.

[**0095**] Tissue pad **208** is illustrated in greater detail in **FIGS. 27 through 29**. Tissue pad **208** includes a T-shaped protrusion **212**, a left protrusion surface **214**, a right protrusion surface **216**, a top surface **218**, and a bottom surface **219**. Bottom surface **219** includes the serrations **210** previously described. Tissue pad **208** also includes a beveled front end **209** to ease insertion during assembly as will be described below.

[**0096**] Referring now to **FIG. 26**, the distal end of the tubular member **174** of the inner tube **170** preferably includes a finger or flange **171** that extends therefrom. The flange **171** has an opening **173**A and an opening **173**B (not shown) to receive the first post **206**A and second post **206**B of the clamp arm **202**. When the inner tube **170** of the elongated member **150** is moved axially, the flange **171** moves forwardly or rearwardly while engaging the first post **206**A and second post **206**B of the clamp arm assembly **300** to open and close the clamp arm **202**.

[**0097**] Referring now to **FIGS. 24, 25**, and **31** through **33**, the clamp arm **202** of end-effector **180** is shown in greater detail. Clamp arm **202** includes an arm top **228** and an arm bottom **230**, as well as a straight portion **235** and a curved portion **236**. Straight portion **235** includes a straight T-slot **226**. Curved portion **236** includes a first top hole **231**, a second top hole **232**, a third top hole **233**, a fourth top hole **234**, a first bottom cut-out **241**, a second bottom cut-out **242**, a third bottom cut-out **243**, a forth bottom cut-out **244**, a first ledge **221**, a second ledge **222**, a third ledge **223**, a fourth ledge **224**, and a fifth ledge **225**.

[**0098**] Top hole **231** extends from arm top **228** through clamp arm **202** to second ledge **222**. Top hole **232** extends from arm top **228** through clamp arm **202** to third ledge **223**. Top hole **233** extends from arm top **228** through clamp arm **202** to fourth ledge **224**. Top hole **234** extends from arm top **228** through clamp arm **202** to fifth ledge **225**. The arrangement of holes **231** through **234** and ledges **211** through **225** enables clamp arm **202** to include both the straight portion **235** and the curved portion **236**, while being moldable from a process such as, for example, metal injection molding (MIM). Clamp arm **202** may be made out of stainless steel or other suitable metal utilizing the MIM process.

[**0099**] Referring to **FIGS. 30 and 31**, tissue pad **208** T-shaped protrusion **212** is insertable into clamp arm **202** straight T-slot **226**. Clamp arm **202** is designed such that tissue pad **208** may be manufactured as a straight component by, for example, injection molding, machining, or extrusion. As clamp arm **202** is inserted into straight T-slot **226** and moved progressively through curved portion **236**, beveled front edge **209** facilitates bending of tissue pad **208** to conform to the curvature of clamp arm **202**. The arrangement of holes **231** through **234** and ledges **211** through **225** enables clamp arm **202** to bend and hold tissue pad **208**.

[**0100**] **FIGS. 32 and 33** illustrate how clamp arm **202** holds tissue pad **208** in place while maintaining a bend in tissue pad **208** that conforms to curved portion **236** of clamp arm **202**. As illustrated in **FIG. 32**, third ledge **223** contacts right protrusion surface **216** providing a contact edge **238**, while left protrusion surface **214** is unsupported at this position. At a distal location, illustrated in **FIG. 33**, fourth ledge **224** contacts left protrusion surface **214** providing a contact edge **239**, while right protrusion surface **216** is unsupported at this location.

[**0101**] Referring back now to **FIG. 2** again, the inner tube **170** of the elongated member **150** fits snugly within the opening **166** of the outer tube **160**. The inner tube **170** preferably includes an inner hub **172**, a tubular member **174**, a circumferential groove **176**, a pair of opposing openings **178**, a pair of opposing openings **178**, and a longitudinal opening or aperture **175** extending therethrough. The inner tube **170** preferably has a substantially circular cross-section, and may be fabricated from stainless steel. It will be recognized that the inner tube **170** may be constructed from any suitable material and may be any suitable shape.

[**0102**] The inner hub **172** of the inner tube **170** preferably has a larger diameter than the tubular member **174** does. The pair of opposing openings **178** of the inner hub **172** allow the inner hub **172** to receive the pin **163** to allow the inner tube **170** and the ultrasonic waveguide **179** to transfer torque for attaching ultrasonic waveguide **179** to stud **50** as previously described. An O-ring **220** is preferably disposed in the circumferential groove **176** of the inner hub **172**.

[**0103**] The ultrasonic waveguide **179** of the elongated member **150** extends through aperture **175** of the inner tube **170**. The ultrasonic waveguide **179** is preferably substantially semi-flexible. It will be recognized that the ultrasonic waveguide **179** may be substantially rigid or may be a flexible wire. Ultrasonic vibrations are transmitted along the ultrasonic waveguide **179** in a longitudinal direction to vibrate the ultrasonic blade **88**.

[**0104**] The ultrasonic waveguide **179** may, for example, have a length substantially equal to an integral number of one-half system wavelengths ($n\lambda/2$). The ultrasonic

waveguide **179** may be preferably fabricated from a solid core shaft constructed out of material which propagates ultrasonic energy efficiently, such as titanium alloy (i.e., Ti-6A1-4V) or an aluminum alloy. It is contemplated that the ultrasonic waveguide **179** may be fabricated from any other suitable material. The ultrasonic waveguide **179** may also amplify the mechanical vibrations transmitted to the ultrasonic blade **88** as is well known in the art.

[**0105**] As illustrated in **FIG. 2**, the ultrasonic waveguide **179** may include one or more stabilizing silicone rings or damping sheaths **110** (one being shown) positioned at various locations around the periphery of the ultrasonic waveguide **179**. The damping sheaths **110** dampen undesirable vibration and isolate the ultrasonic energy from the inner tube **170** assuring the flow of ultrasonic energy in a longitudinal direction to the distal end of the ultrasonic blade **88** with maximum efficiency. The damping sheaths **110** may be secured to the ultrasonic waveguide **179** by an interference fit such as, for example, a damping sheath described in U.S. patent application Ser. No. 08/808,652 hereby incorporated herein by reference.

[**0106**] Referring again to **FIG. 2**, the ultrasonic waveguide **179** generally has a first section **182**, a second section **184**, and a third section **186**. The first section **182** of the ultrasonic waveguide **179** extends distally from the proximal end of the ultrasonic waveguide **179**. The first section **182** has a substantially continuous cross-section dimension.

[**0107**] The first section **182** preferably has at least one radial waveguide hole **188** extending therethrough. The waveguide hole **188** extends substantially perpendicular to the axis of the ultrasonic waveguide **179**. The waveguide hole **188** is preferably positioned at a node but may be positioned at any other suitable point along the ultrasonic waveguide **179**. It will be recognized that the waveguide hole **188** may have any suitable depth and may be any suitable shape.

[**0108**] The waveguide hole **188** of the first section **182** is aligned with the opposing openings **178** of the hub **172** and outer tube holes **161** of hub **162** to receive the pin **163**. The pin **163** allows rotational torque to be applied to the ultrasonic waveguide **179** from the rotational knob **190** in order to rotate the elongated member **150**. Passageway **195** of elongated member **150** includes opposing openings **178**, outer tube holes **161**, waveguide hole **188**, and opposing holes **199**.

[**0109**] The second section **184** of the ultrasonic waveguide **179** extends distally from the first section **182**. The second section **184** has a substantially continuous cross-section dimension. The diameter of the second section **184** is smaller than the diameter of the first section **182**. As ultrasonic energy passes from the first section **182** of the ultrasonic waveguide **179** into the second section **184**, the narrowing of the second section **184** will result in an increased amplitude of the ultrasonic energy passing therethrough.

[**0110**] The third section **186** extends distally from the distal end of the second section **184**. The third section **186** has a substantially continuous cross-section dimension. The third section **186** may also include small diameter changes along its length. The third section preferably includes a seal **187** formed around the outer periphery of the third section **186**. As ultrasonic energy passes from the second section **184** of the ultrasonic waveguide **179** into the third section **186**, the narrowing of the third section **186** will result in an increased amplitude of the ultrasonic energy passing therethrough.

[**0111**] The third section **186** may have a plurality of grooves or notches (not shown) formed in its outer circumference. The grooves may be located at nodes of the ultrasonic waveguide **179** or any other suitable point along the ultrasonic waveguide **179** to act as alignment indicators for the installation of a damping sheath **110** during manufacturing.

[**0112**] Still referring to **FIG. 2**, damping sheath **110** of the surgical instrument **150** surrounds at least a portion of the ultrasonic waveguide **179**. The damping sheath **110** may be positioned around the ultrasonic waveguide **179** to dampen or limit transverse side-to-side vibration of the ultrasonic waveguide **179** during operation. The damping sheath **110** preferably surrounds part of the second section **184** of the ultrasonic waveguide **179**. It is contemplated that the damping sheath **110** may be positioned around any suitable portion of the ultrasonic waveguide **179**. The damping sheath **110** preferably extends over at least one antinode of transverse vibration, and more preferably, a plurality of antinodes of transverse vibration. The damping sheath **110** preferably has a substantially circular cross-section. It will be recognized that the damping sheath **110** may have any suitable shape to fit over the ultrasonic waveguide **179** and may be any suitable length.

[**0113**] The damping sheath **110** is preferably in light contact with the ultrasonic waveguide **179** to absorb unwanted ultrasonic energy from the ultrasonic waveguide **179**. The damping sheath **110** reduces the amplitude of non-axial vibrations of the ultrasonic waveguide **179**, such as, unwanted transverse vibrations associated with the longitudinal frequency of 55,500 Hz as well as other higher and lower frequencies.

[**0114**] The damping sheath **110** is constructed of a polymeric material, preferably with a low coefficient of friction to minimize dissipation of energy from the axial motion or longitudinal vibration of the ultrasonic waveguide **179**. The polymeric material is preferably floura-ethylene propene (FEP) which resists degradation when sterilized using gamma radiation. It will be recognized that the damping sheath **110** may be fabricated from any suitable material, such as, for example, PTFE.

[**0115**] The damping sheath **110** preferably has an opening extending therethrough, and a longitudinal slit **111**. The slit **111** of the damping sheath **110** allows the damping sheath **110** to be assembled over the ultrasonic waveguide **179** from either end. It will be recognized that the damping sheath **110** may have any suitable configuration to allow the damping sheath **110** to fit over the ultrasonic waveguide **179**. For example, the damping sheath **110** may be formed as a coil or spiral or may have patterns of longitudinal and/or circumferential slits or slots. It is also contemplated that the damping sheath **110** may be fabricated without a slit **111** and the ultrasonic waveguide **179** may be fabricated from two or more parts to fit within the damping sheath **110**.

[**0116**] It will be recognized that the ultrasonic waveguide **179** may have any suitable cross-sectional dimension. For

example, the ultrasonic waveguide **179** may have a substantially uniform cross-section or the ultrasonic waveguide **179** may be tapered at various sections or may be tapered along its entire length.

[**0117**] The ultrasonic waveguide **179** may also amplify the mechanical vibrations transmitted through the ultrasonic waveguide **179** to the ultrasonic blade **88** as is well known in the art. The ultrasonic waveguide **179** may further have features to control the gain of the longitudinal vibration along the ultrasonic waveguide **179** and features to tune the ultrasonic waveguide **179** to the resonant frequency of the system.

[**0118**] The proximal end of the third section **186** of ultrasonic waveguide **179** may be coupled to the distal end of the second section **184** by an internal threaded connection, preferably near an antinode. It is contemplated that the third section **186** may be attached to the second section **184** by any suitable means, such as a welded joint or the like. Third section **186** includes ultrasonic blade **88**. Although the ultrasonic blade **88** may be detachable from the ultrasonic waveguide **179**, the ultrasonic blade **88** and ultrasonic waveguide **179** are preferably formed as a single unit.

[**0119**] The ultrasonic blade **88** may have a length substantially equal to an integral multiple of one-half system wavelengths ($n\lambda/2$). The distal end of ultrasonic blade **88** may be disposed near an antinode in order to provide the maximum longitudinal excursion of the distal end. When the transducer assembly is energized, the distal end of the ultrasonic blade **88** is configured to move in the range of, for example, approximately 10 to 500 microns peak-to-peak, and preferably in the range of about 30 to 150 microns at a predetermined vibrational frequency.

[**0120**] The ultrasonic blade **88** is preferably made from a solid core shaft constructed of material which propagates ultrasonic energy, such as a titanium alloy (i.e., Ti-6A1-4V) or an aluminum alloy. It will be recognized that the ultrasonic blade **88** may be fabricated from any other suitable material. It is also contemplated that the ultrasonic blade **88** may have a surface treatment to improve the delivery of energy and desired tissue effect. For example, the ultrasonic blade **88** may be micro-finished, coated, plated, etched, grit-blasted, roughened or scored to enhance coagulation and cutting of tissue and/or reduce adherence of tissue and blood to the end-effector. Additionally, the ultrasonic blade **88** may be sharpened or shaped to enhance its characteristics. For example, the ultrasonic blade **88** may be blade shaped, hook shaped, or ball shaped.

[**0121**] As illustrated in **FIGS. 34, 35** and **36**, the geometry of the ultrasonic blade **88** in accordance with the present invention delivers ultrasonic power more uniformly to clamped tissue than predicate devices. The end-effector **180** provides for improved visibility of the blade tip so that a surgeon can verify that the blade **88** extends across the structure being cut or coagulated. This is especially important in verifying margins for large blood vessels. The geometry also provides for improved tissue access by more closely replicating the curvature of biological structures. Blade **88** provides a multitude of edges and surfaces, designed to provide a multitude of tissue effects: clamped coagulation, clamped cutting, grasping, back-cutting, dissection, spot coagulation, tip penetration and tip scoring.

[**0122**] The distal most tip of blade **88** has a surface **54** perpendicular to tangent **63**, a line tangent to the curvature at the distal tip. Two fillet-like features **61**A and **61**B are used to blend surfaces **51**, **52** and **54**, thus giving a blunt tip that can be utilized for spot coagulation. The top of the blade **88** is radiused and blunt, providing a broad edge, or surface **56**, for clamping tissues between it and clamp arm assembly **300**. Surface **56** is used for clamped cutting and coagulation as well as manipulating tissues while the blade is inactive.

[**0123**] The bottom surface has a spherical cut **53** that provides a narrow edge, or sharp edge **55**, along the bottom of blade **88**. The material cut is accomplished by, for example, sweeping a spherical end mill through an arc of radius R1 and then finishing the cut using a second, tighter radius R2 that blends the cut with a bottom surface **58** of the blade **88**. Radius R1 is preferably within the range of 0.5 inches to 2 inches, more preferably within the range of 0.9 inches to 1.1 inches, and most preferably about 1.068 inches. Radius R2 is preferably within the range of 0.125 inches to 0.5 inches, and most preferably about 0.25 inches. The second radius R2 and the corresponding blend with the bottom surface **58** of blade **88** diminishes the stress concentrated at the end of the spherical cut relative to stopping the cut without this blend. The sharp edge **55** facilitates dissection and unclamped cutting (back-cutting) through less vascular tissues.

[**0124**] Spherical cut **53** on bottom surface **58** of blade **88** creates sharp edge **55** while removing a minimal amount of material from blade **88**. Spherical cut **53** on the bottom of blade **88** creates a sharp edge **55** with an angle of a as described below. This angle α may be similar to predicate shears devices such as, for example, the LCS-K5 manufactured by Ethicon Endo-Surgery, Inc., Cincinnati, Ohio. However the blade **88** of the present invention cuts faster than predicate devices by virtue of the orientation of the angle α with respect to the typical application force. For the predicate shears devices, the edges are symmetric, spanning the application force equally. The edges for the present invention are asymmetric, with the asymmetry of the edges dictating how quickly tissue is separated or cut. The asymmetry is important in that it provides for an effectively sharper edge when ultrasonically activated, without removing a significant volume of material, while maintaining blunt geometry. This asymmetric angle as well as the curvature of the blade act to self tension tissue during back-cutting utilizing a slight hook-like or wedge-like action.

[**0125**] Sharp edge **55** of ultrasonic blade **88** is defined by the intersection of surface **53** and a second surface **57** left after bottom surface **58** has received spherical cut **53**. Clamp arm assembly **300** is pivotally mounted on said distal end of outer tube **160** for pivotal movement with respect to ultrasonic blade **88**, for clamping tissue between clamp arm assembly **300** and ultrasonic blade **88**. Reciprocal movement of inner tube **170** pivots clamp arm assembly **300** through an arc of movement, defining a vertical plane **181**. A tangent **60** of spherical cut **53** at sharp edge **55** defines an angle α with a tangent **62** of second surface **57**, as illustrated in **FIG. 35**. The bisection **59** of angle α preferably does not lie in vertical plane **181**, but is offset by an angle β. Preferably the tangent **60** of spherical cut **53** lies within about 5 to 50 degrees of vertical plane **181**, and most preferably the tangent of spherical cut **53** lies about 38.8 degrees from vertical plane **181**. Preferably angle α is within the range of about 90 to 150 degrees, and most preferably angle α is about 121.6 degrees.

[0126] Looking to **FIG. 35**A, an alternate embodiment of the present invention is illustrated with an asymmetric narrow edge. A tangent **60**A of a spherical cut **53**A at a sharp edge **55**A defines an angle αA with a tangent **62**A of a second surface **57**A, as illustrated in **FIG. 35A**. A bisection **59**A of angle αA preferably does not lie in a vertical plane **181**A, but is offset by an angle βA.

[0127] The curved shape of the design of ultrasonic blade **88** also results in a more uniformly distributed energy delivery to tissue as it is clamped against the blade **88**. Uniform energy delivery is desired so that a consistent tissue effect (thermal and transection effect) along the length of end-effector **180** is achieved. The distal most 15 millimeters of blade **88** is the working portion, used to achieve a tissue effect. As will be further described below, the displacement vectors for locations along the curved shears blade **88** have directions that, by virtue of the improvements of the present invention over predicate instruments, lie largely in the x-y plane illustrated in **FIGS. 34 and 35**. The motion, therefore, of blade **88** lies within a plane (the x-y plane) that is perpendicular to the direction of the clamping force from clamp arm assembly **300**.

[0128] Straight symmetric ultrasonic blades in general have tip excursions that lie along the longitudinal axis, designated the x-axis in **FIGS. 34 and 35**. Transverse motion is usually undesirable because it results in undesirable heat generation in inner tube **170**. When a functional asymmetry is added to an ultrasonic blade, such as a curved end-effector as described in U.S. Pat. application Ser. No. 09/106,686 previously incorporated herein by reference, the functional asymmetry creates an imbalance in the ultrasonic waveguide. If the imbalance is not corrected, then undesirable heat, noise, and compromised tissue effect occur. Although U.S. patent application Ser. No. 09/106,686 teaches how to provide ultrasonic blades that are balanced proximal to the balance asymmetry, the distal portion of the end-effector has an excursion in at least two axes. If the end-effector has a single plane of functional asymmetry, such as a curved end-effector, but the blade is otherwise symmetric, then the excursion will lie in a plane at the distal most end.

[0129] It is often desirable to minimize any ultrasonic blade **88** excursion in the z-axis direction. Excursion of ultrasonic blade **88** in the z-axis direction causes system inefficiencies, resulting in undesirable heating, power loss, and possibly noise. Excursion of ultrasonic blade **88** in the z-axis direction at end-effector **180** causes the ultrasonic blade **88** to impact tissue lying between ultrasonic blade **88** and clamp arm assembly **300**. It is desirable to limit ultrasonic blade **88** excursion to the x-y plane shown in **FIGS. 34 and 35**. This allows ultrasonic blade **88** to rub tissue lying between ultrasonic blade **88** and clamp arm assembly **300** without impact, which optimizes heating of the tissue, and thus provides optimal coagulation. Minimizing z-axis excursion both proximal to the end-effector **180**, and in ultrasonic blade **88**, may be accomplished by proper selection of a spherical cut **53**.

[0130] However, an ultrasonic end-effector **180** with an ultrasonic blade **88** that has multiple functional asymmetries, such as ultrasonic blade **88** as illustrated in **FIGS. 34 through 36**, will naturally have a tendency to include tip excursion in all three axes, x, y, and z if not balanced properly. For example, ultrasonic blade **88** as illustrated in **FIG. 34** is curved in the y direction at its distal end. This curvature, although balanced proximal to end-effector **180**, will cause ultrasonic blade **88** to have excursions in both the x and y directions when activated. Adding spherical cut **53** subsequently adds another level of asymmetry to ultrasonic blade **88**, causing tip excursion in all three axes if not corrected, and also causing z-axis imbalances in ultrasonic waveguide **179** which decreases efficiency.

[0131] It is possible to minimize z-axis tip excursion proximal to the functional asymmetry, and therefore maximize efficiency with improved tissue effect, by providing a functional asymmetry optimized to minimize z-axis excursion in ultrasonic waveguide **179**. As illustrated in **FIG. 34**, spherical cut **53** may extend proximally into ultrasonic blade **88**, from the most distal end, to any position. For example, **FIG. 34** illustrates a first position **66**, a second position **67**, and a third position **68**, for spherical cut **53** to extend into ultrasonic blade **88**.

[0132] Table 1 below describes three possible lengths of spherical cuts **53** for ultrasonic blade **88** illustrated in **FIG. 34** as first position **66**, second position **67**, and third position **68**. The rows of Table 1 correspond to the length of cut into the ultrasonic blade **88**, and the columns of Table 1 correspond to the balance condition and excursions along each axis for each cut length. It can be appreciated from Table 1 that providing spherical cut **53** to a length corresponding to first position **68** minimizes the z axis excursion proximal to the functional asymmetry. It is preferable to balance ultrasonic blade **88** below 15% z axis excursion proximal to the functional asymmetry and it is most preferable to balance ultrasonic blade **88** below 5% z axis excursion proximal to the functional asymmetry. Preferably clamp coagulator **120** is designed to be balanced when activated in air (loaded only by air), and then balance is verified under other load conditions.

[0133] In Table 1, a normalized excursion percentage (% z) in a clamping instrument at the end-effector **88** is calculated by taking the magnitude of the excursion in the direction normal to the clamp arm when the clamp arm is in its fully closed position, and dividing that magnitude by the magnitude of the maximum tip vibration excursion (also called the primary tip vibration excursion), and then multiplying the dividend by one hundred. Primary tip vibration excursion is the magnitude of the major axis of the ellipse or ellipsoid created by a point on the distal most end of ultrasonic blade **88** when the ultrasonic blade **88** is activated. The measurement of excursions is more fully explained in IEC international standard 61847, titled *Measurement and Declaration of the Basic Output Characteristics* of ultrasonic surgical systems, hereby incorporated herein by reference. A normalized excursion percentage (%x, %y, %z) in ultrasonic blade **88** or ultrasonic waveguide **179** is calculated by taking the magnitude of a secondary vibration excursion, and dividing that magnitude by the magnitude of the primary tip vibration excursion, and then multiplying the dividend by one hundred. Secondary tip vibration excursion is the magnitude of a minor axis, or other arbitrary axis, of the ellipse or ellipsoid created by a point on the distal most end of ultrasonic blade **88** when the ultrasonic blade **88** is activated.

[0134] Table 1. Three possible lengths to provide a range of balances for a 0.946 inch long blade with a radius of R1

manufactured from Ti6A14V with the blade including a functional asymmetry.

TABLE 1

Three possible lengths to provide a range of balances for a 0.946 inch long blade with a radius of R1 manufactured from Ti6Al4V with the blade including a functional asymmetry.

	% x at distal end of blade 88	% y at distal end of blade 88	% z at distal end of blade 88	% z proximal to blade 88
Cut Length = 12.8 mm, Location at first position 68	71.83	69.47	4.15	0.40
Cut Length = 14.8 mm, Location at second position 67	72.49	68.87	1.60	12.43
Cut Length = 8.2 mm, Location at third position 66	74.54	66.03	9.21	8.25

[0135] Referring now to FIGS. **1-4**, the procedure to attach and detach the clamp coagulator **120** from the acoustic assembly **80** will be described below. When the physician is ready to use the clamp coagulator **120**, the physician simply attaches the clamp coagulator **120** onto the acoustic assembly **80**. To attach the clamp coagulator **120** to acoustic assembly **80**, the distal end of stud **50** is threadedly connected to the proximal end of the transmission component or ultrasonic waveguide **179**. The clamp coagulator **120** is then manually rotated in a conventional screw-threading direction to interlock the threaded connection between the stud **50** and the ultrasonic waveguide **179**.

[0136] Once the ultrasonic waveguide **179** is threaded onto the stud **50**, a tool, such as, for example, a torque wrench, may be placed over the elongated member **150** of the clamp coagulator **120** to tighten the ultrasonic waveguide **179** to the stud **50**. The tool may be configured to engage the wrench flats **169** of the hub **162** of the outer tube **160** in order to tighten the ultrasonic waveguide **179** onto the stud **50**. As a result, the rotation of the hub **162** will rotate the elongated member **150** until the ultrasonic waveguide **179** is tightened against the stud **50** at a desired and predetermined torque. It is contemplated that the torque wrench may alternately be manufactured as part of the clamp coagulator **120**, or as part of the hand piece housing **20**, such as the torque wrench described in U.S. Pat. No. 5,776,155 hereby incorporated herein by reference.

[0137] Once the clamp coagulator **120** is attached to the acoustic assembly **80**, the surgeon can rotate the rotational knob **190** to adjust the elongated member **150** at a desired angular position. As the rotational knob **190** is rotated, the teeth **269** of the tubular collar **260** slip over the pawls **286** of the yoke **280** into the adjacent notch or valley. As a result, the surgeon can position the end-effector **180** at a desired orientation. Rotational knob **190** may incorporate an indicator to indicate the rotational relationship between instrument housing **130** and clamp arm **202**. As illustrated in **FIGS. 17 and 18**, one of the ridges **197** of rotational knob **190** may be used to indicate the rotational position of clamp arm **202** with respect to instrument housing **130** by utilizing, for example, an enlarged ridge **200**. It is also contemplated that alternate indications such as the use of coloring, symbols, textures, or the like may also be used on rotational knob **190** to indicate position similarly to the use of enlarged ridge **200**.

[0138] To detach the clamp coagulator **120** from the stud **50** of the acoustic assembly **80**, the tool may be slipped over the elongated member **150** of the surgical tool **120** and rotated in the opposite direction, i.e., in a direction to unthread the ultrasonic waveguide **179** from the stud **50**. When the tool is rotated, the hub **162** of the outer tube **160** allows torque to be applied to the ultrasonic waveguide **179** through the pin **163** to allow a relatively high disengaging torque to be applied to rotate the ultrasonic waveguide **179** in the unthreading direction. As a result, the ultrasonic waveguide **179** loosens from the stud **50**. Once the ultrasonic waveguide **179** is removed from the stud **50**, the entire clamp coagulator **120** may be thrown away.

[0139] While preferred embodiments of the present invention have been shown and described herein, it will be obvious to those skilled in the art that such embodiments are provided by way of example only. Numerous variations, changes, and substitutions will now occur to those skilled in the art without departing from the invention. Accordingly, it is intended that the invention be limited only by the spirit and scope of the appended claims.

What is claimed is:

1. An ultrasonic clamp coagulator apparatus comprising:

a housing, said housing comprising an actuator;

an outer tube having a proximal end joined to said housing, and a distal end, said outer tube defining a longitudinal axis;

an actuating element reciprocably positioned within said outer tube, said actuating element operatively connected to said actuator;

an ultrasonic waveguide positioned within said outer tube, said ultrasonic waveguide having an end-effector extending distally from said distal end of said outer tube,

wherein said end-effector comprises a broad edge and a narrow edge, wherein said narrow edge is defined by the intersection of a first surface and a second surface, wherein said first surface extends proximally into said end-effector defining a length of said first surface; and

a clamp arm pivotally mounted on said distal end of said outer tube for pivotal movement with respect to said end-effector for clamping tissue between said clamp arm and said end-effector, said pivotal movement occurring about a horizontal axis, the arc of said pivotal movement of said clamp arm defining a vertical plane, said vertical plane having a vertical axis orthogonal to both said longitudinal axis and said horizontal axis, said clamp arm operatively connected to said actuating element so that reciprocal movement of said actuating element pivots said clamp arm along said vertical plane;

wherein said length of said first surface balances said waveguide such that excursion of said waveguide is minimized in said vertical plane.

2. An ultrasonic clamp coagulator apparatus according to claim 1, wherein excursion of said end-effector along said vertical axis is limited to less than 15%.

3. An ultrasonic clamp coagulator apparatus according to claim 1, wherein excursion of said end-effector along said vertical axis is limited to less than 10%.

4. An ultrasonic clamp coagulator apparatus according to claim 1, wherein excursion of said end-effector along said vertical axis is limited to less than 5%.

5. A blade for an ultrasonic surgical instrument comprising:

a proximal end;

a distal end;

a broad edge; and

a narrow edge, wherein said narrow edge is defined by the intersection of a first surface and a second surface, wherein said first surface extends proximally into said blade from said distal end toward said proximal end, defining a length of said first surface;

wherein said length of said first surface balances said blade such that a secondary tip excursion of said blade is less than 15% of the primary tip excursion of said blade.

6. An ultrasonic surgical instrument according to claim 5, wherein a secondary tip excursion of said blade is less than 10% of the primary tip excursion of said blade.

7. An ultrasonic surgical instrument according to claim 5, wherein a secondary tip excursion of said blade is less than 5% of the primary tip excursion of said blade.

8. An ultrasonic surgical instrument according to claim 5, wherein said first surface is concave.

9. An ultrasonic surgical instrument according to claim 6, wherein said first surface is concave.

10. An ultrasonic surgical instrument according to claim 7, wherein said first surface is concave.

11. An ultrasonic surgical instrument according to claim 8, wherein said second surface is convex.

12. An ultrasonic surgical instrument according to claim 9, wherein said second surface is convex.

13. An ultrasonic surgical instrument according to claim 10, wherein said second surface is convex.

14. A method of balancing an ultrasonic blade comprising the steps of:

A) selecting a maximum acceptable level of undesirable blade excursion;

B) adding a functional asymmetry to said blade by removing an amount of material from a portion of said blade along a length of said blade, wherein said length of said functional asymmetry satisfies said acceptable level of undesirable excursion identified in step A.

15. A method of balancing an ultrasonic blade according to claim 14, wherein said maximum acceptable level of undesirable blade excursion in step A is 15% normalized excursion.

16. A method of balancing an ultrasonic blade according to claim 14, wherein said maximum acceptable level of undesirable blade excursion in step A is 10% normalized excursion.

17. A method of balancing an ultrasonic blade according to claim 14, wherein said maximum acceptable level of undesirable blade excursion in step A is 5% normalized excursion.

18. A method of balancing an ultrasonic blade according to claim 14, wherein in step B, said functional asymmetry is a narrow edge, wherein said narrow edge is defined by the intersection of a first surface and a second surface, wherein said first surface extends proximally into said blade from a distal end of said blade toward a proximal end of said blade, defining said length of said functional asymmetry;

wherein said length of said functional asymmetry balances said blade such that a secondary tip excursion of said blade is less than 15% of the primary tip excursion of said blade.

* * * * *