Aug. 21, 1962 W. F. MEYER 3,049,717

BOWLER'S WRIST SUPPORT

Filed June 16, 1960

FIG. 1.

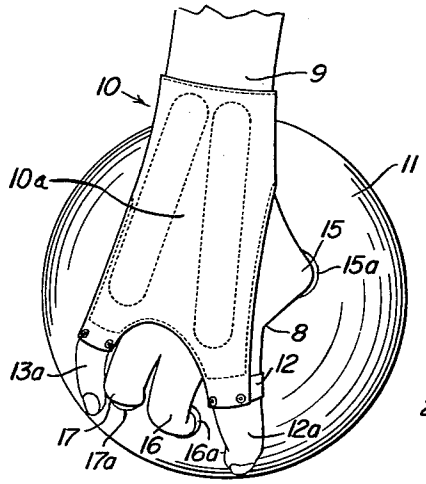

FIG. 3.

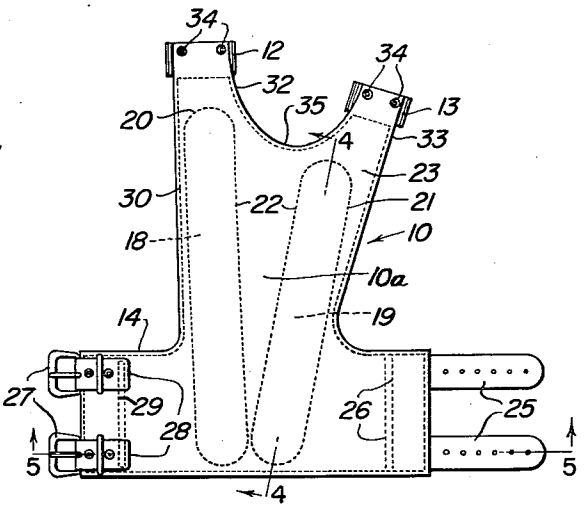

FIG. 2.

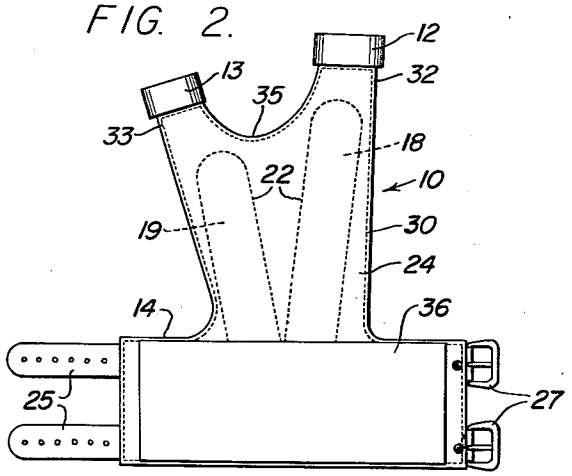

FIG. 4.

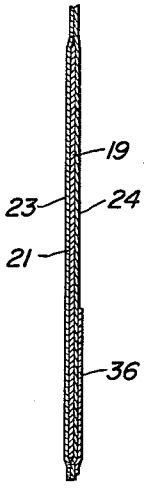

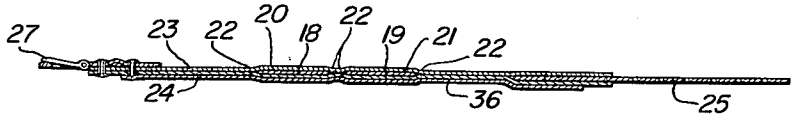

FIG. 5.

INVENTOR.
WILLIAM F. MEYER

BY Mallinckrodt and Mallinckrodt
ATTORNEYS

United States Patent Office 3,049,717 Patented Aug. 21, 1962

3,049,717

BOWLER'S WRIST SUPPORT

William F. Meyer, West Jordan, Utah, assignor to Bowling Master, Incorporated, a corporation of Utah

Filed June 16, 1960, Ser. No. 36,508
5 Claims. (Cl. 2—16)

This invention relates to devices for improving control in bowling, and is particularly concerned with providing an effective wrist support for bowlers.

For proper bowling, it is essential that the bowler maintain his wrist unbent, although the very nature of a ball-delivery swing tends to enforce a bending action. Because of this tendency, all bowlers bend or "break" the wrist to some extent. Experts have learned to control such tendency to a high degree.

The tendency to "break" the wrist is most pronounced when gravity and centrifugal forces combine at the bottom of the arc in both the backward and forward motion of a bowlers' swing. Thus, it appears that this tendency varies through each swing due to the fact that the magnitude of these forces varies from swing to swing. This being the case, it can be easily appreciated why it is such a problem for a bowler to either overcome these forces tending to bend the wrist or compensate for same.

Principal objects of this invention, therefore, are to provide resistance against forces tending to bend or "break" the wrist in bowling and to free the bowler from the problem of having to overcome such forces or of having to compensate for any bending of the wrist that does occur.

In achieving these objects, I provide a wrist support having resilient stiffening means adapted to span the back of the wrist substantially from the lower forearm to the knuckles of the hand. For placing such stiffening means properly with respect to the wrist, they are mounted in soft pliable material, such as leather, having at one end a strap and buckle extension adapted to encircle the lower forearm, and having two mutually spaced finger loops at the other end. The resilient stiffening means advantageously is in the form of two strips extending forwardly in divergent relationship from the lower forearm to the knuckle region of the index finger and to the knuckle region of the little finger respectively.

A specific embodiment representing what is presently regarded as the best mode of carrying out the invention is illustrated in the accompanying drawing.

In the drawing:

FIG. 1 represents a perspective view of the bowling hand and arm of a bowler about to deliver a ball onto a lane, the bowler wearing the wrist-supporting device of the invention;

FIG. 2, a plan view showing the inner face of the wrist support of FIG. 1 as extended flatwise with the strap and buckle extension for the lower forearm spread out ready to receive the hand of a wearer;

FIG. 3, a corresponding view showing the outer face;

FIG. 4, a longitudinal section taken on the line 4—4 of FIG. 3; and

FIG. 5, a transverse section taken on the line 5—5 of FIG. 3.

Referring to the drawing:

The bowler, whose bowling hand **8** and lower forearm **9** are shown in FIG. 1, is wearing a wrist support **10** conforming to the invention. This enables him to resist forces tending to bend or "break" his wrist during delivery of the ball **11** and to develop proper wrist control.

Wrist support **10** is constructed and arranged to overlie the back of the hand and the wrist and to terminate in the lower forearm. It comprises a body portion **10***a* of flexible material, such as leather, and is adapted to be secured in place by means of finger loops **12** and **13** at the forward end of such body portion and by a strap and buckle extension **14** at the rearward end of such body portion. The finger loops are advantageously arranged to encircle the index and little fingers **12***a* and **13***a*, while the strap and buckle extension is arranged to encircle the lower portion of the bowler's forearm. In this connection, it should be noted that wrist support **10** does not encase the hand in a big mitt or cumbersome glove and does not present interference problems, since finger loops **12** and **13** are the only portions of the device which come in contact with the bowling ball. The bowler's thumb **15** is left entirely free for insertion in ball opening **15***a* and his second and third fingers **16** and **17**, respectively, are also left entirely free for insertion in ball openings **16***a* and **17***a*, respectively, in customary fashion.

Wrist support **10** is stiffened to provide resistance against bending of the wrist by resilient stiffening strips **18** and **19** made of spring steel. These are conveniently contained in respective pockets **20** and **21** formed by stitching **22** and the leather top layer **23** and leather bottom layer **24** of wrist support **10**. Pockets **20** and **21** and stiffly flexible resilient steel strips **18** and **19**, which could be strips or impregnations of any suitable resilient yet stiff material, lie in substantially contiguous side by side relation in the strap and buckle extension **14**. Strips **18** and **19** and their respective pockets **20** and **21** extend forwardly from extension **14** in divergent, substantially V relationship, to the knuckle region of the index finger **12***a* and the knuckle region of the little finger **13***a*, respectively. With this construction strips **18** and **19** span the wrist from the lower forearm **9** to the back of the hand **8**.

Strap and buckle extension **14** is provided with straps **25** which are fastened in place as by stitching **26** and with buckles **27** which are mounted as by leather strips **28** and stitching **29**. Straps **25** and buckles **27** are used to fasten wrist support **10** around the forward portion of the bowler's forearm and finger loops **12** and **13** for fastening the support to the index and little fingers **12***a* and **13***a* respectively. Finger loops **12** and **13** may be leather or made of elastic material adapted for snugly fitting the base of respective fingers.

Wrist support **10** is generally soft and pliable being made of leather or suitable soft and pliable plastic material with the exception of stiffening strips **18** and **19** and buckles **27**. Leather top layer **23** and leather bottom layer **24**, which are fastened together by stitching **30**, advantageously form the body portion **10***a* of wrist support **10**. This not only encloses stiffening strips **18** and **19** but also includes extension **14** equipped with the straps **25** and buckles **27** and is provided with extensions **32** and **33** to which finger loops **12** and **13** are mounted respectively as by stitching or rivets **34**. Body portion **31** of wrist support **10** is indented to present a forward edge **35** in the form of a U between extensions **32** and **33** of the wrist support to provide clearance for the knuckle region of the second and third fingers **16** and **17** respectively. This insures unrestrained freedom for the second and third fingers in gripping the ball **11**. In addition a felt liner **36** may be provided within the strap and buckle extension **14** for the bowlers added comfort and convenience, if desired.

Whereas there is here illustrated and described a preferred construction which I presently regard as the best mode of carrying out my invention, it should be understood that various changes may be made without departing from the disclosed inventive subject matter particularly pointed out and distinctly claimed herebelow.

I claim:

1. A wrist support, comprising a body portion of flexible material adapted to overlie the back of a hand; a relatively narrow finger loop at the forward end of the body

portion adapted for receiving and encircling the index finger of the hand; a second relatively narrow finger loop at the forward end of the body portion in laterally spaced relationship to the first finger loop such that it receives and encircles the little finger of the hand; an extension at the rear end of the body portion arranged for encircling the forward portion of the forearm in the region of the wrist; means for securing said extension in its encircling relationship with the wrist; and resilient stiffening means associated with said body portion and extending along the length thereof.

2. The wrist support of claim 1, wherein pockets are provided for the resilient stiffening means; and the resilient stiffening means comprise two stiffly flexible resilient strips.

3. The wrist support of claim 2, wherein said stiffly flexible resilient strips extend forwardly in substantially V relationship from substantially contiguous side by side relation in said extension.

4. The wrist support of claim 3, wherein the forward margin of said body portion is indented between said finger loops to leave the second and third fingers of the hand uncovered.

5. The wrist support of claim 1, wherein said finger loops are elastic and adapted for snugly fitting the base of respective fingers.

References Cited in the file of this patent

UNITED STATES PATENTS

1,594,151	Chance	July 27, 1926
2,154,197	Callaway	Apr. 11, 1939
2,447,328	Gerrits	Aug. 17, 1948
2,563,724	Henry	Aug. 7, 1951
2,707,283	Silver et al.	May 3, 1955
2,949,610	Lutsky	Aug. 23, 1960