Dec. 29, 1959 H. HESS ET AL 2,919,006

CONTROL FOR POWER-OPERATED OFFICE MACHINES

Filed Feb. 24, 1959 4 Sheets-Sheet 1

FIG. 1

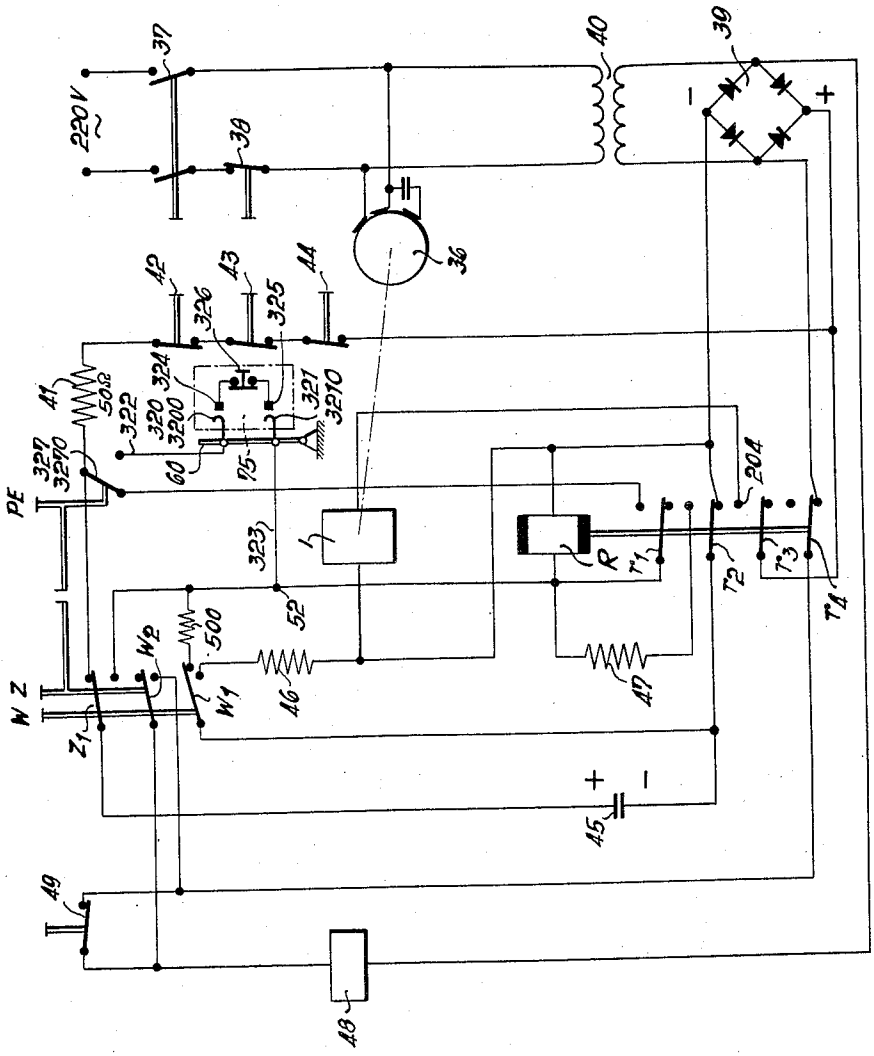

INVENTORS:
Hans Hess & Günther Lüder
By [signature]
Patent Agent

Dec. 29, 1959 H. HESS ET AL 2,919,006

CONTROL FOR POWER-OPERATED OFFICE MACHINES

Filed Feb. 24, 1959 4 Sheets-Sheet 2

FIG. 2

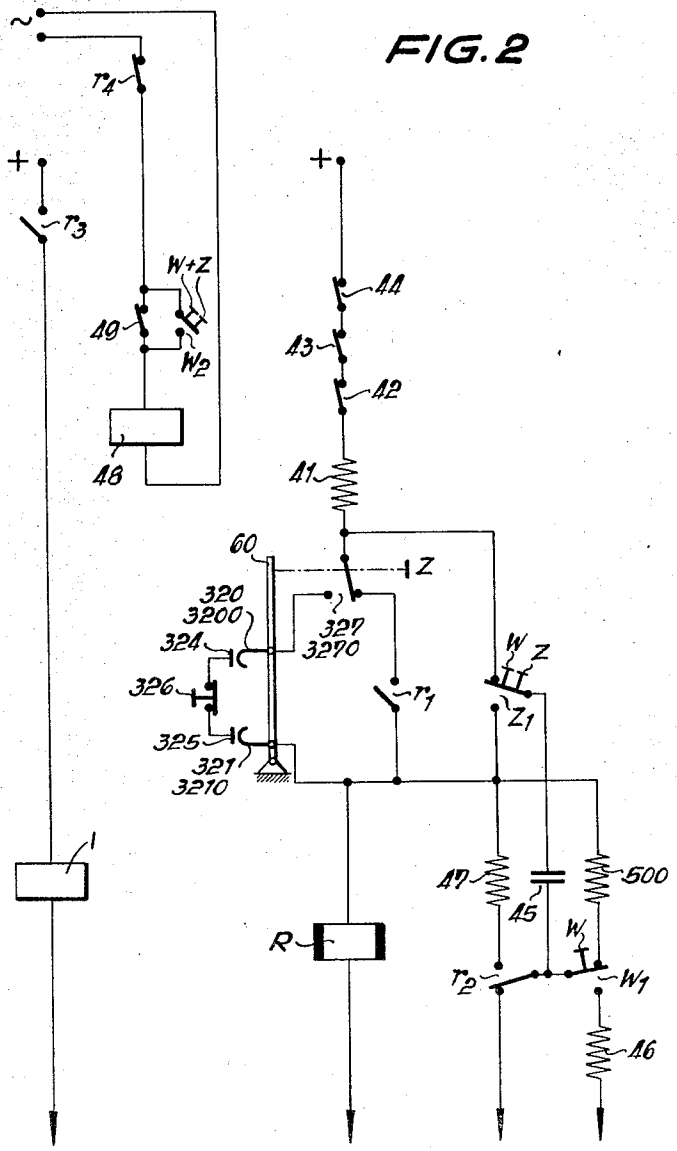

INVENTORS:

Hans Hess & Günther Lüder

By Erich D. Winkel

Patent Agent

Dec. 29, 1959 H. HESS ET AL 2,919,006

CONTROL FOR POWER-OPERATED OFFICE MACHINES

Filed Feb. 24, 1959 4 Sheets-Sheet 3

FIG. 3a

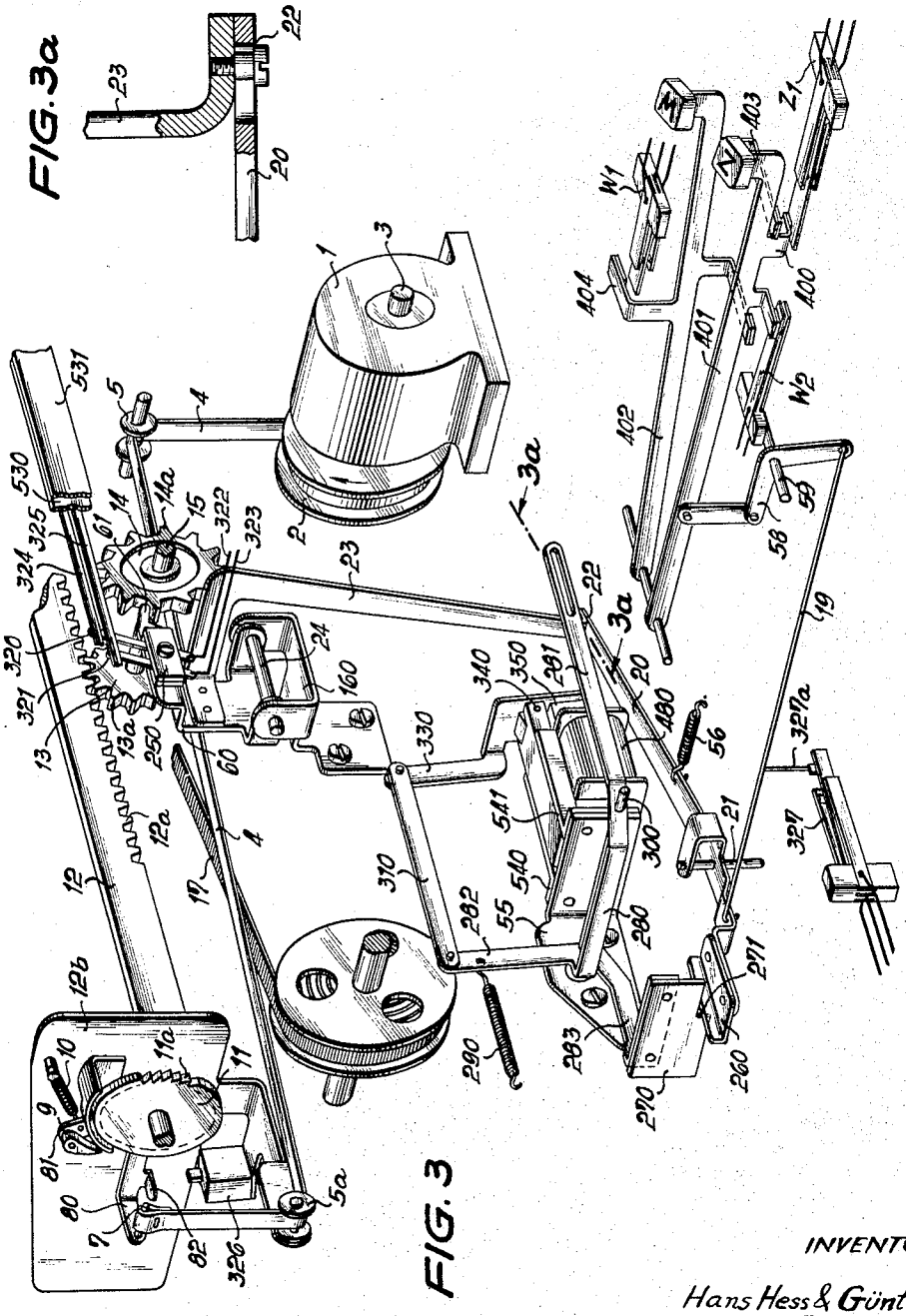

FIG. 3

INVENTORS:

Hans Hess & Günther Lüder

By Eric D. Fendel
Patent Agent

Dec. 29, 1959 H. HESS ET AL 2,919,006

CONTROL FOR POWER-OPERATED OFFICE MACHINES

Filed Feb. 24, 1959 4 Sheets-Sheet 4

FIG. 5

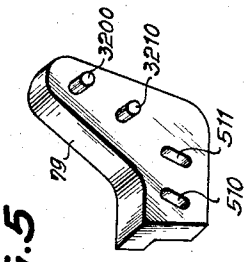

FIG. 4

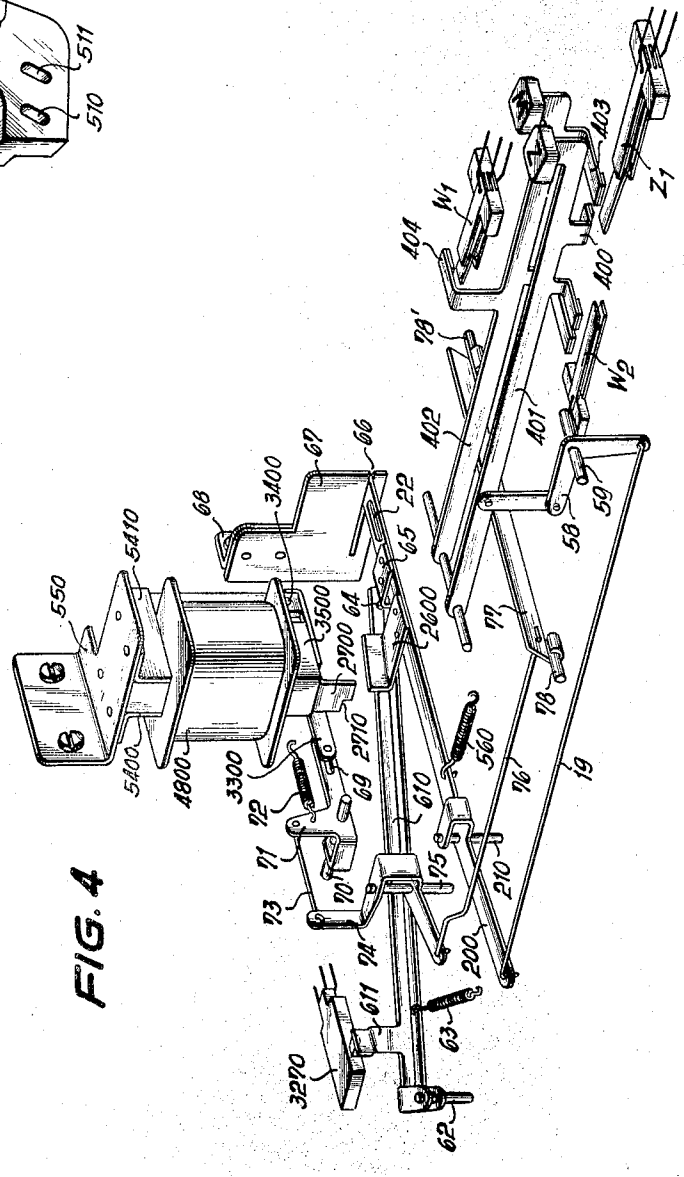

INVENTORS:

Hans Hess & Günther Lüder

By Eric D. Manfred
Patent Agent

United States Patent Office 2,919,006 Patented Dec. 29, 1959

2,919,006

CONTROL FOR POWER-OPERATED OFFICE MACHINES

Hans Hess and Günther Lüder, Wilhelmshaven, Germany, assignors to Olympia Werke AG., Wilhelmshaven, Germany

Application February 24, 1959, Serial No. 795,123

Claims priority, application Germany February 27, 1958

7 Claims. (Cl. 197—66)

The present invention relates to a key or push button switch controlled relay system for a combined carriage return and line spacing mechanism in typewriters, calculating and similar office machines. This type of machine, ordinarily, is driven by an electric motor through the intermediary of a magnetic clutch. The relay control mechanism is adapted to perform the line spacing operation in every position of the typewriter carriage, either together with a carriage return movement, or independently thereof.

It has been known to couple the line spacing device with the electrically driven carriage return mechanism. To accomplish this, a carriage drawband is attached at one end to a line spacing lever, and at its opposite end to a rotatable reel. Upon actuation of one of the typewriter keys, said drawband reel is non-positively connected to a drivng motor via a magnetic clutch. The line spacing lever is disposed at one end of the typewriter carriage and actuates a line spacing ratchet wheel by means of a line spacing pawl engageable with said ratchet wheel. If the electric coil of said magnetic clutch is energized by an electric current, due to actuation of one of the typewriter keys, the carriage drawband is tensioned due to rotation of its supporting reel, whereupon said drawband first pulls the line spacing lever and, subsequently, pulls the carriage into its starting position. As the carriage nears completion of its run, it engages a safety limit switch, thereby automatically cutting off the electric current supply to the magnetic clutch.

In order to cause a line spacing operation without subsequent carriage return movement in any carriage position, it has been proposed not only to actuate those switching operations required to engage the magnetic clutch upon depression of a special line spacing key but, moreover, at the same time to mechanically block any possible carriage movement by means of a locking member. For this purpose, an additional electrical switch has to be provided to assure the disengagement of the magnetic clutch upon completion of the line spacing operation.

In the aforementioned arrangement, this additional switch is operatively connected with said locking member. Thus, said locking member is provided with a pair of arms of different length and, thereby, defines a rotatably supported lever which is held in its rest position by a spring and pivoted into its blocking or locking position upon actuation of the line spacing key. In this carriage locking position, the shorter lever arm of the locking member engages with a tooth of a locking gear, while its longer arm is provided above a control bar which operates the additional electric switch.

After the line spacing operation has been accomplished under the action of the drawband acting on the line spacing lever, the tensioning force exerted on the carriage increases and swings the locking member overcoming the force of a spring, whereupon its longer lever arm actuates said electric switch by means of the intermediary of said switching element or bar to thereby disengage the electromagnetic clutch. As a result of this, the pulling force

exerted on the carriage by the drawband ceases at this instant and the line spacing lever and locking lever or blocking member are returned to their rest positions under the action of spring means. If there is still pressure exerted on the line spacing key, the electric switch which is operated by the switching bar is switched on, whereby continuous and repeated line spacing operations take place, as long as said line spacing key is actuated.

In order to obtain a positive line spacing operation, even during instantaneous or relatively brief intervals of actuation of said line spacing key, there is provided a locking mechanism which locks the locking member for the duration of a line spacing operation.

The electrical part of the line spacing device comprises a switch and a control circuit. The switch circuit includes the electric coil of the electromagnetic clutch and an operating contact of the control relay, whereas the control circuit comprises all of the key or push button switches and operating switches in addition to the electric coil for the control relay. Notwithstanding this advantageous arrangement, certain characteristics of the line spacing mechanism have proven disadvantageous. For example, the motor has to be designed for such a high power, that it easily overcomes the aforementioned yielding, pulling force acting on the carriage. Furthermore, the control or completion of the line spacing operation is accomplished with a time delay corresponding to the increase in this force, said time delay determining the number of line spacing operations in a second. In addition, the mechanical operating and locking mechanisms are complicated and not infallible, due to the operative connection of the electric switch with the locking member, and, especially, since said switch is required to perform more than one function.

Accordingly, it is an important object of the present invention to separate the different functions of the electric switch from one another.

It is another object of the present invention to arrange a control switch provided in the circuit of a control relay for energizing an electromagnetic clutch on the front side of the typewriter carriage in the path of travel of a line spacing lever, so that said control switch is only actuated upon completion of the line spacing operation by means of an attachment provided on said spacing lever.

It is another object of the invention to provide switch means operatively connected with a line spacing key which, when depressed, will close the circuit of the control relay via the control switch on the front of the carriage while, when the line spacing key is not depressed, said switch means will close the control relay via a pair of holding contacts.

It is a further object of the invention to provide a switch member connected to a locking mechanism, said switch member opening and closing a circuit during the time when no voltage is applied.

It is a still further object of the invention to provide a plurality, i.e., three, switch means which are connected in series in the control relay circuit.

As a result of this novel arrangement of switch means, it is possible to directly control the line spacing operation by means of the line spacing lever without time delay and to provide a stop member rotatable about an axis.

The carriage can be returned by means of a smaller motor than heretofore required, because it is not necessary to increase its pulling force. Furthermore, the locking mechanism may be simplified, i.e., the switching bar is unnecessary and the locking mechanism comprises only a few and relatively simple members actuated by means of an electromagnet. The line spacing control system according to the present invention does not have retard-

ing members interfering with its rapid operation so that, during an uninterrupted line spacing, the number of successive line spacing operations per second can be considerably increased.

The reduced number of simplified elements comprising the new line spacing device renders the entire device lighter and less cumbersome, whereby the susceptibility to breakdown is reduced to a minimum.

Still further objects and the entire scope of applicability of the present invention will become apparent from the detailed description given hereinafter; it should be understood, however, that the detailed description and specific examples, while indicating preferred embodiments of the invention, are given by way of illustration only, since various changes and modifications within the spirit and scope of the invention will become apparent to those skilled in the art from this detailed description.

In the drawings:

Figure 1 diagrammatically shows the entire electric circuit of a device according to the invention;

Figure 2 is a diagram of an electrical control circuit according to the invention;

Figure 3 schematically illustrates a perspective view of one embodiment of the invention;

Figure 3*a* is a fragmentary sectional view, taken along the line 3*a*—3*a* in Figure 3, showing the connection between a control lever and its associated upright lever;

Figure 4 is a perspective view of another embodiment of the invention;

Figure 5 illustrates a switch connected to a stop member according to the invention.

GENERAL DESCRIPTION

The present invention may be embodied in typewriters or like office machines of various types. For the purpose of illustration, the invention described hereinafter is shown as applied to an electrically-operated typewriter. The drawings illustrate only enough of the typewriter structure to assist in illustrating and explaining the manner in which the new device may be successfully used in such an electric typewriter.

Referring now in detail to the drawings and, more particularly, to Figure 1 thereof, a condenser-controlled electric motor **36** is connected to a suitable A.C. power supply line by means of a double pole-single throw switch **37** and a single pole-double throw switch **38**. A transformer **40**, also connected to said A.C. power line via said switches **37** and **38**, supplies alternating current to an electromagnet **48** (or **480** in Figure 3, and **4800** in Figure 4) via a rest contact r_4 of a main or control relay R and a limit contact **49** which can be bridged by the key-actuated switch W_2. The transformer **40** also supplies current to a rectifier **39**. A switch circuit and a control circuit are connected to said rectifier, as more clearly shown in Figure 2. The coil or winding of an electromagnetic clutch **1** (see Figures 1, 2 and 3) inserted in the switch circuit receives current from the rectifier **39** if a contact r_3 of the main relay R is closed, i.e., if this contact r_3 is connected to the winding of this clutch **1** via terminal **204**. Upon energization of the clutch **1**, a drawband reel **2** is positively coupled to the electric motor **36**. The main relay R is operated and controlled by single or combined actuation of the switch means of the control circuit, Figure 1 showing the contacts r_1, r_2, r_3 and r_4 of this relay in positions assumed when the relay is deenergized.

The magnetic clutch **1** can either be actuated by the line spacing key Z or the carriage return key W. For this purpose, the carriage return key W directly actuates the switches W_1, W_2 and Z_1 (see Figures 1–4), whereas the line spacing key Z, which controls a line spacing operation without subsequent carriage return movement, directly actuates the switches W_2 and Z_1 in addition to switches **327** (Figures 1, 2 and 3) or **3270** (Figures 1, 2 and 4). Moreover, the line spacing key Z actuates a pair of spring contacts **320**, **321** provided with strip-like conductors or extensions **324**, **325** (see Figures 1–3). In place of these spring contacts **320**, **321**, contact pins **3200**, **3210**, as shown in Figure 5, may be provided. As shown in Figure 3, the spring contacts **320**, **321** are secured to a locking member **60**, which will be described in more detail hereinafter, by means of a contact supporting block **250**, suitably made of insulating material. The ends of conductors or wires **322**, **323** are connected to terminals on the lower ends of the spring contacts **320**, **321**, respectively. If the line spacing key Z is depressed, the spring contacts **320**, **321** will engage the strip-like extensions **324**, **325**, respectively, which, for example, may be printed on an insulating strip **530** which, in turn, is attached to the typewriter carriage by means of a strip member **531** made of a synthetic material. The aforementioned contact pins **3200**, **3210**, alternatively used according to the modification of Figure 5, are resiliently and displaceably arranged in an insulated holder **79** which, in turn, is adapted to be secured to the locking member **60** by means of bolts passing through oblong apertures **510** and **511** enabling adjustments of the holder with respect to the locking member **60**.

The circuit arrangements described in the foregoing are schematically illustrated in Figures 1 and 2, in which like parts bear similar reference characters. A control switch **326** is provided on the front side of the typewriter carriage adjacent a line spacing wheel **11** (see Figures 1, 2 and 3).

According to Figures 1 and 2, the circuit of the control relay R may also be interrupted by a tabulator switch **44**, a correcting space bar switch **43** and a limit switch **42**. The control or main relay R controls, in addition to the operating contact r_3 in the circuit of the electromagnetic clutch **1**, the holding contact r_1, the change switch contact r_2 and the rest contact r_4. The purpose of resistors **41**, **46**, **47** and **500** in Figures 1 and 2, and of condenser **45** will be explained below.

The two embodiments of the line spacing mechanisms, shown in Figures 3 and 4, have certain characteristics in common. Thus, in both instances, the electromagnetic clutch **1**, which is illustrated only in Figure 3, nonpositively couples the drawband reel **2** to the shaft **3** of the continuously running motor **36** (Figure 1) when its electric winding is energized by an electric current. The carriage drawband **4** is guided over a pair of grooved pulleys **5** and **5***a* and is connected at one end to a pin **7** carried by a line spacing lever **80**. This line spacing lever is provided with an upwardly extending arm **81** to which a pawl **9** is secured, adapted to engage the teeth **11***a* of the line spacing wheel **11**. The line spacing lever **80** is held in its rest or disengaging position by means of a helical spring **10**.

The teeth **12***a* of a rack **12** of a typewriter carriage **12***b*, only partially shown, engage with the teeth **13***a* of a pinion wheel **13** which is in registry with a ratchet wheel **14** by means of a rotatable shaft **15**. The line spacing key Z, overcoming the force of a spring **56**, in addition to the mentioned switch contacts W_2 and Z_1 actuates a control lever **20** which is adapted to rock about a pivot bolt **21**, the movement of the key Z being transmitted to the lever **20** via a bell crank arm **58** rotatably mounted on a shaft **59** and a pull rod **19**. An upright arm **23** is connected to one end of the control lever **20** by means of an oblong slot and a pin is passed therethrough at **22**, interconnecting said lever **20** and arm **23** (see Figure 3*a*). This upright arm **23** is secured to the locking member **60**. A bearing bracket **160** supports a shaft **24** on which the locking member **60** is journalled, the forward end of which is provided with a locking pawl **61** engageable with the teeth **14***a* of the ratchet wheel **14** upon depression of the line spacing key Z.

The control levers **20** in Figure 3 and **200** in Figure 4 serve the same purpose and are of similar construction. As shown in Figures 3 and 4, these control levers **20**

and 200 are provided with bent abutment means 260 and 2600, respectively, to lock the locking member 60 for the carriage movement. As shown in Figure 3, a switch 327 can be actuated by the pull rod or bar 19 with the aid of a downwardly extending arm 327a. In the embodiment of Figure 4, a switch 3270 is secured to the housing of the office machine, i.e., the typewriter, and is actuated by means of the projection 611 on a switching lever 610. This switching lever 610 is rotatably mounted on a vertical shaft 62 and is held in its rest position by means of a spring 63. The free end of the switching lever 610 is provided with a nose 64 which cooperates with an angle member 65, this angle member 65 being adjustably mounted on the control lever 200. A guide slot 66 is provided in an adjustable bracket 67 to prevent the transmission of switching thrusts of the electromagnet 4800 to other parts of the control device.

In both embodiments of Figures 3 and 4, the locking of the line spacing device or of the locking member 60 is caused by deenergization of the electromagnet 48 or 480, or 4800 (Figures 1, 2, 3 and 4, respectively). The electromagnet 480 or 4800 is mounted on the bracket 55 or 550, respectively, by means of flanges 540, 541, or 5400, 5410, respectively. The armature 350 or 3500 is rotatably mounted on a pin 340 or 3400, respectively, and is provided with an extending arm 330 or 3300, respectively. In the embodiment according to Figure 3, this extending arm 330 is connected to an intermediate arm 280 rotatably mounted on a shaft 300 via a hinged connecting link 310 and a lever arm 282. An extension 283 of the intermediate arm 280 is provided with an abutment plate 270 having a shoulder 271. In the locking position, the shoulder 271 bears against the abutment 260 of the control lever 20.

In the embodiment of Figure 4, an abutment plate 2700 and its shoulder 2710 are directly secured to the armature 3500. The extending arm 3300, together with a bell crank lever 71, is biased by a helical tension spring 72. An oblong slit 69, provided in said bell crank lever 71, forms an elbow joint on said arm 3300 adapted to transmit the displacement of the armature 3500 via this elbow joint, said bell crank lever 71, a push rod 73, a linkage lever 74 and a push rod 76, to a flap member, i.e., key locker 77, which is hingedly mounted on bolts 78 and 78'.

Line spacing without subsequent carriage return

When the line spacing key Z is depressed, a rocking movement of the locking member 60 is caused, whereby the locking pawl 61 enters a gap between two teeth 14a of the ratchet wheel 14, whereby, simultaneously, the control circuit, shown in Figure 2, is closed, as will be explained below.

According to the two embodiments of the invention illustrated in Figures 3 and 4, the displacement of the line spacing key Z is mechanically transmitted to the pull rod 19 by means of the bell crank arm 58, pivoting on shaft 59, said pull rod 19 rocking the lever 20 (Figure 3) or 200 (Figure 4) about a pivot 21 (Figure 3) or 210 (Figure 4), respectively, overcoming the force of the spring 56 (Figure 3) or 560 (Figure 4), respectively. The control lever 20, in the form of a double-armed lever, is adapted to transmit its rocking movement to the locking member 60 via the oblong slot and pin connection at 22 and the upright arm 23 (Figure 3a) in such a manner that, when the key Z is entirely depressed, the locking pawl 61 engages a gap between two teeth 14a of the ratchet wheel 14 and, thereby, locks the carriage against movement.

Simultaneously with this mechanical locking, the following actions take place in the electric circuits, see Figures 2, 3 and 4.

Figure 2 shows the condition of the circuit prior to the depression of key Z. According to this circuit diagram, one terminal of the condenser 45 is connected to the positive terminal of the rectifier 39 (Figure 1) by means of the switch Z_1, while the other condenser terminal is connected to the minus terminal of said rectifier via the relay contact r_2, thus charging the condenser 45. The switches are adjusted in such a manner that, upon depressing the key Z, the switch Z_1 is first actuated by means of a lug 400 on an operating member 401 of the key Z_1 with the result that the voltage across the condenser is applied to the shunt circuit comprising the coil of the relay R and the resistor 500. The value of the resistor 500 is considerably lower than the resistance of the coil of the control relay R, so that a discharge current will flow through the resistor 500 without influencing the coil of the relay R.

By further depressing the line spacing key Z, the displacement of this key is transmitted to the rockable locking member 60, the spring contacts 320 and 321 (Figures 2 and 3) of which are brought into engagement with the strip-like extensions 324 and 325, respectively, whereby the energizing circuit for the main or control relay R is prepared via these extensions and the control switch 326 connected thereto, Figures 2 and 3, said control switch being provided on the front side of the carriage of the office machine. Finally, i.e., upon continued depression of the key Z, the switch 327 (Figure 3) or 3270 (Figure 4) is operated by means of the pull rod 19 (Figure 2) or the lever 610 (Figure 4), respectively, and the previously prepared circuit for the control relay R is closed, whereupon the latter is energized and its armature attracted. Now, the relay R interrupts the circuit for the locking magnet 48 (Figure 1), 480 (Figure 3) or 4800 (Figure 4) by means of its rest contact r_4 (Figure 2).

The condition of this line spacing device when the key Z is completely depressed is shown in Figure 3. Under the action of the spring 290, the shoulder 271 of the plate 270 rests against the abutment 260 when the armature is not attracted, whereby the locking position of the locking member 60 is retained if the key Z is manually released.

Figure 4 shows a modified line spacing device in rest position. When the key Z in Figure 4 is completely depressed, the released armature 3500 of the deenergized electromagnet 4800 will lock the locking member, as the shoulder 2710 engages the abutment 2600.

During a line spacing step without carriage release, the closing of the holding contact r_1 has no consequences, because switch 327 (or 3270 respectively) is thrown over upon actuation of line spacing key Z.

The change switch contact r_2 of the control relay serves to connect the condenser 45 across the discharge resistor 47 of low value to discharge this condenser. The operating contact r_3 is adapted to close the circuit for the coil of the electromagnetic clutch 1 with the result that the drawband reel 2 (Figure 3) will then be coupled to the shaft 3 of the continuously running motor 36 (Figure 1). The carriage drawband 4 pulls the line spacing lever 80, thereby causing the pawl 9 associated therewith to rotate the line spacing wheel 11. After completion of a line spacing operation, a lug 82 on the line spacing lever 80 opens the control switch 326 with the result that the energizing circuit through the coil of the control relay R is interrupted (see Figure 2).

The rest contact r_4 causes energization of the electromagnet 48 so that its armature is attracted, whereby the locking condition is removed. If the key Z was previously released, the spring 56 (Figure 3) or 560 (Figure 4) returns the line spacing device to its original or starting position. The operating contact r_1 disconnects the energizing coil of the electromagnetic clutch 1 and the change switch contact r_2 connects the condenser 45 with the minus terminal of the circuit.

Switches 327 (Figure 3), or 3270 (Figure 4), and Z_1 are reversed and the spring contacts 320 and 321 become disengaged from the strip-like extensions 324 and 325, respectively. The original or starting position of

the device is mechanically and electrically restored and another depression of the key Z can cause a new line spacing step.

However, if the key Z remains depressed, the line spacing steps are repeated as long as the line spacing key is depressed, because the key-actuated switches remain in their operative position. If the control switch 326 has opened upon completion of a line spacing step, the relay R is deenergized, as described in the foregoing. The attraction of the electromagnet 480 or 4800 remains ineffective, since the depressed key Z retains the locking member 60 in its locking position. Upon opening of the operating contact r_3, the electromagnetic clutch 1 is instantaneously deenergized with the result that the pull of the carriage drawband 4 subsides. The spring 10 returns the line spacing lever 80 to its original or starting position. As a result of this, the control switch 326 (Figure 2) immediately recloses the energizing circuit of the coil of the control relay R, whereupon this relay instantaneously will respond, i.e., will close the energizing circuit of the electromagnetic clutch 1.

In order to provide a time interval sufficiently great for the spring 10 of the line spacing lever 80 to return this line spacing lever to its original or starting position, a time delay means is associated with the relay R which will operate with a predetermined delay. Upon opening of the control switch 326 and deenergization of the relay R, its switch contact r_2 has changed its switching position and applies the now discharged condenser 45 to the negative voltage terminal. This condenser 45 became discharged via the resistor 47 during the preceding line spacing step. If the control switch 326 is now reclosed, the discharged condenser 45, during constant depressing of the line spacing key, is shunted across the relay coil via the key-operated switch Z_1 and the switch contact r_2. The condenser 45 is charged until the necessary energizing voltage across the coil of the relay R is obtained. Only then, the relay armature will be attracted. This delay in the attraction of the relay armature is sufficient for the spring 10 to return the line spacing lever 80 to its original or starting position.

The time delay in the response of the relay armature can be adjusted by changing the values of the resistor 41 and the condenser 45, whereby, additionally, the number of lines to be spaced at each step can be adjusted by suitably setting the pawl 9.

In case of uninterrupted line spacing, the condenser 45 will always be discharged via the resistor 47 when the switch contact r_2 is in its operative position, so that this condenser 45 in discharged condition is ready for a delayed action on each line spacing step.

Line spacing with subsequent carriage return

A line spacing step with subsequent carriage return is caused by depressing the key W which is mounted on an operating bar 402 and operates only the switches Z_1 and W_1 by means of lugs 403 and 404, respectively, attached to said bar 402. The switch 327 (Figure 3), or 3270 (Figure 4), remains in its rest position and prepares the circuit for the control relay R via the holding contact r_1. By operating the carriage return key W, the switching position of the switch Z_1 is reversed and, simultaneously, the switch W_1 is opened. Thus, the condenser 45 will be immediately discharged via the coil of the relay R, the armature of which is then attracted. In the meantime, the switching position of the switch W_1 is reversed so that the discharging circuit of the condenser 45 is maintained via the resistor 47, even if the switch contact r_2 interrupts the circuit due to the attraction of the relay armature. The armature of this relay R remains in the attracted position if the key W is released, because the energizing circuit of the relay coil is then held closed via the holding contact r_1. The residual charge of the condenser 45 is discharged via the resistor 47. The operating contact r_3 then closes the energizing circuit of the coil of the electromagnetic clutch 1.

A line spacing step, as described in the foregoing, takes place at first. After completion of this line spacing step, the pull of the drawband 4 is transmitted to the carriage, because the opening of the switch 326 remains ineffective. The carriage returns to its original or starting position and opens the limit switch 42 in the relay circuit. The line spacing step with subsequent carriage release will be completed, although the key W may still be depressed.

Keyboard locking

Figure 4 illustrates how a keyboard lock can suitably be operated by means of the electromagnet 4800. Whenever a cycle is completed which is controlled by the relay R, this electromagnet 4800 is deenergized by opening of the rest contact r_4. The tension spring 72 then pulls the key locker 77 by means of the lever 71, the push rod 73, the linkage lever 74 and the push rod 76, so that the entire keyboard will be locked. Only after completion of this cycle, i.e., after release of the relay R, the electromagnet 4800 is energized, whereby the keyboard lock is returned to its rest position by means of the armature of the electromagnet 4800, overcoming the force of the spring 72.

We claim:

1. In a power-operated office machine, a displaceable carriage for rotatably supporting a platen, line spacing means on said carriage to rotate said platen in predetermined increments, drive means communicating with said line spacing means and adapted to initiate at least one line spacing operation, locking means operatively connected to said displaceable carriage and adapted to lock said carriage to prevent movement thereof, key means in registry with said carriage locking means for actuating the latter, and control means actuated by said key means for operating said drive means, said control means including a control switch mounted on said carriage in the path of said line spacing means and being adapted to be actuated thereby only after completion of each line spacing operation so as to terminate the operation of said drive means.

2. In a power-operated office machine, a displaceable carriage for rotatably supporting a platen, line spacing means on said carriage to rotate said platen in predetermined increments, drive means communicating with said line spacing means and said carriage and adapted to initiate at least one line spacing operation, locking means operatively connected to said carriage and adapted to lock said carriage to prevent movement thereof, first key means in registry with said carriage locking means for actuating the latter, control means actuated by said first key means for operating said drive means, said control means including a control switch mounted on said carriage in the path of said line spacing means and being adapted to be actuated thereby only after completion of each line spacing operation so as to terminate the operation of said drive means, and second key means for actuating said control means independently of said first key means, whereby said drive means carries out a line spacing operation followed by a carriage return movement.

3. In a power-operated office machine according to claim 2, said control means including an electric power source, a relay, first switch means operated by said first key means to connect said relay to said power source, and second switch means actuated by said relay for connecting said drive means to said power source.

4. In a power-operated office machine according to claim 3, said first switch means comprising two pairs of contacts, one of said contact pairs being inserted in a control circuit for said relay together with a pair of holding contacts for said relay, whereby when said first key means is not actuated said control circuit is prepared by closing said one contact pair, while upon actuation of said

first key means, said one contact pair is opened and the other of said contact pairs is closed, said other contact pair being in series circuit connection with said control switch and relay so as to energize the latter and cause a line spacing operation.

5. In a power-operated office machine according to claim 4, said other contact pair comprising first contact means on said locking means and second complementary contact means on said carriage, said first and second contact means engaging one another in the locked position of said locking means, whereby said first and second contact means are inserted in said series circuit of said control switch, while said first and said second contact means are disengaged from one another in the unlocked position of said locking means thereby interrupting said series circuit.

6. A device for line spacing typewriters and similar office machines having a displaceable carriage, comprising driving means for said carriage, an electric control circuit for said driving means, a first key movable into one position to initially energize said control circuit, a line spacing mechanism actuated by said driving means, a locking device adapted to prevent movement of said carriage, means communicating with said locking device and actuated by said first key to move said locking device into a carriage locking position until completion of a line spacing operation, and a second key for energizing said control circuit to actuate the latter independently of said locking device, said control circuit including a control switch mounted on said carriage in the path of said line spacing means and being adapted to be actuated thereby upon completion of each line spacing operation so as to terminate the operation of said driving means.

7. A device according to claim 6, wherein said electric control circuit includes a relay, an electromagnet controlled by said relay when said first key is actuated, said electromagnet having an armature operatively connected to said locking device and adapted to prevent movement of said carriage by means of said locking device during a line spacing operation without carriage return movement.

References Cited in the file of this patent

UNITED STATES PATENTS

938,801	Trejo	Nov. 2, 1909
1,143,404	Kennedy	June 15, 1915
1,251,867	Crawley	June 1, 1918
1,509,228	Carino	Sept. 23, 1924
2,104,007	Bower	Jan. 4, 1938