Nov. 13, 1962 W. C. BRANDSMA ET AL 3,063,868

APPARATUS AND METHOD FOR COATING CONTINUOUS WEBS

Filed Oct. 28, 1959

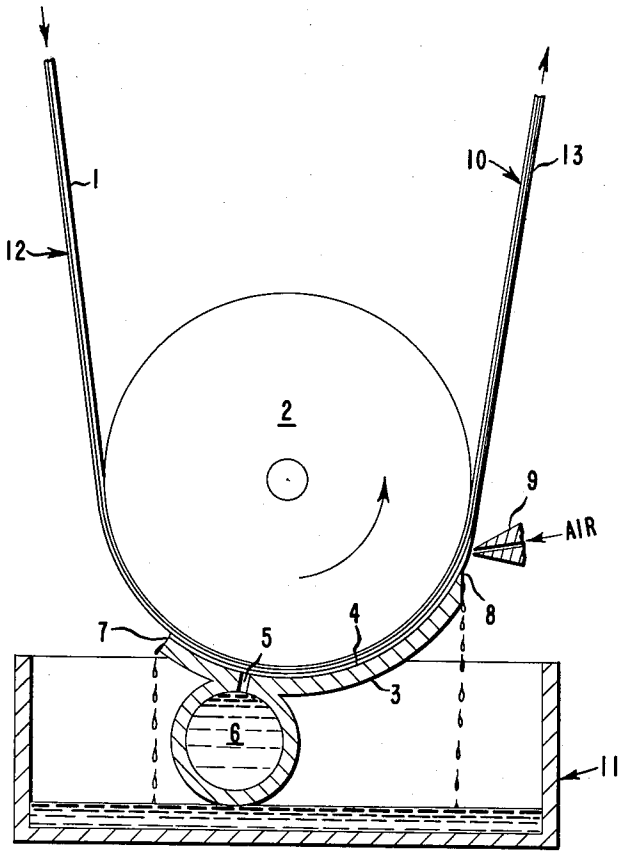

INVENTORS
WALTER CHARLES BRANDSMA
WARREN CARL FISHER
BERNARD KARL SAYDLOWSKI

BY Francis A. Paintin
AGENT

United States Patent Office

3,063,868

Patented Nov. 13, 1962

1

3,063,868
APPARATUS AND METHOD FOR COATING CONTINUOUS WEBS

Walter Charles Brandsma, Westfield, N.J., Warren Carl Fisher, Wilmington, Del., and Bernard Karl Saydlowski, Hazlet, N.J., assignors to E. I. du Pont de Nemours and Company, Wilmington, Del., a corporation of Delaware

Filed Oct. 28, 1959, Ser. No. 849,376
7 Claims. (Cl. 117—102)

This invention relates to coating continuous webs with liquid coating media. More particularly this invention relates to a liquid applying apparatus and method for coating continuous webs with liquid coating media. Still more particularly this invention relates to a liquid applying apparatus which is adapted to high speed coating of continuous webs and to methods of applying multiple coatings to such webs while preceding layers are in an undried or tacky condition.

Coating continuous webs has evolved into a highly developed art. In the photographic manufacturing field, to which the present invention particularly relates, many methods have been proposed for coating various types of webs with liquid photographic emulsions. The most widely used method of coating is where the web to be coated is passed around a rotating roll so that the web skims the surface of the liquid coating media which is generally contained in a suitable coating pan. Another method has been to coat the surface of the web by the bead method of application, or by direct application of a coating from an applicator roll rotating partially submerged in the coating liquid. The coating pan or hopper in all cases is continuously fed with the coating liquid, so that a constant level of solution is maintained. These same general methods have been used where it is desired to coat more than one layer on a web, particularly, where the previously coated layer has not been thoroughly dried. As coating speeds have increased, various types of doctors have been used to maintain uniform layer thicknesses. The latest types of doctors are the so-called air knives and coating speeds up to 100 feet per minute and higher can be made with controlled thicknesses. However, at these higher speeds, and in the case of overcoating wet previously coated layers, it becomes extremely difficult, if not impossible, to obtain uniform overcoatings. For reasons not entirely understood, a previously applied undried hydrophilic layer temporarily repels subsequent hydrophilic coatings when the coating operation is carried out at speeds in excess of about 50 feet per minute, depending of course, to some extent, on the physico-chemical characteristics of the coating liquids, i.e. viscosity, ionic charge, etc.

It is also well-known that, in the conventional coating pans using the above techniques, there are areas of so-called "dead space" where the coating liquid lies idle and is not applied to the web. In the case of photographic emulsions the silver halide grains may settle out and seriously interfere with the uniformity of the photographic quality of the coated layers. An attempt has been made to overcome this serious defect of idle or dead-spaces by feeding the liquid to be coated from a reservoir over one edge of a curved dam or conduit whose curvature may or may not have the same radius as the coating roll. The structures, while allegedly solving the problems envisioned by the prior art workers, fail completely when applied to the problem which has been solved by the instant invention. In addition to the difficulty of temporary repellency, there is also the problem of entrapping air in the coated layer in the form of bubbles which causes serious defects in the dried photographic element. This is especially true when the liquid being coated is fed into the curved coating applicator over the trailing edge of said applicator. Where

2

the liquid to be coated is fed from a reservoir over the leading edge of the curved applicator, repellent spots and air entrapment both would result when high speed coatings are attempted. Precise control of the width of the coating being applied is difficult to achieve by the above devices.

An object of this invention is to provide a coating apparatus for the satisfactory application of liquid coatings to continuous webs at high speeds, e.g. 100 to 150 feet per minute and higher. Another object is to provide a coating apparatus which effects an extended liquid to web contact time at an increased contact pressure. A further object is to provide a coating apparatus which effects a satisfactory coating of a previously undried hydrophilic layer with a subsequent hydrophilic coating at high speeds. Still another object is to provide a coating apparatus which eliminates the settling-out of particles from the coating liquid during operation which at the same time eliminates the entrapment of air bubbles therein which could cause streaking of the coating. Other objects will appear hereinafter.

These and other objects are accomplished by the apparatus of this invention for continuously coating a web which comprises a guide roll adapted to move the web through the apparatus, an arcuate coating shoe the surface of which is closely adjacent to the guide roll at a substantially uniform distance, said shoe having at least one longitudinal slot through which the coating material is supplied to the web in more than sufficient quantity to entirely fill the arcuate space between the coating shoe and the guide roll.

This invention will now be specifically described with reference to the accompanying drawing wherein:

FIG. 1 is an end sectional view showing a preferred form of the apparatus.

Referring to FIG. 1 there is shown an apparatus for continuously coating a web **1** which passes through the apparatus around a guide roll **2**. The guide roll has an arcuate coating shoe **3** whose entire length is positioned parallel to the axis of the guide roll and whose entire arcuate surface **4** is machined to a smooth finish and is spaced at a close and substantially uniform distance from the guide roll. The arc formed by the arcuate surface of the coating shoe is substantially concentric with the circular surface of the guide roll and under the circumstances has approximately the same radius as the guide roll. The coating shoe **3** has a slot **5** running parallel to the coating roll substantially to the entire length of the coating shoe. The slot **5** connects to the reservoir **6** from which the coating material is supplied to the web through the slot in more than sufficient quantity to entirely fill the space between the guide roll and the coating shoe.

The reservoir **6** is adapted to be supplied with coating material through openings at either or both ends by suitable pumping or gravity feed means. The location of the slot along the arcuate path of the shoe is not critical but is preferably located closer to the trailing edge of the shoe **7** than the leading edge **8** for reasons which will be set forth below. By trailing edge is meant that portion of the shoe which first meets the web as it travels around the guide roll.

Under certain coating conditions, when an excess of liquid is supplied to the coated web **10** as it leaves the apparatus, an air knife doctor **9** may be used to smooth the coated layer and remove the excess liquid from the web as is well known in air knife doctor operations. The leading edge of the shoe **8** can also be used to mechanically doctor the layer with or without further smoothing with an air knife doctor. The excess coating material that overflows edges **7** and **8** can be collected in a suitable trough **11**.

Although FIG. 1 illustrates the arcuate coating shoe **3** and the reservoir **6** as separate parts joined together an integral construction can be used; further, no particular shape of shoe or reservoir is required as long as the arcuate surface **4** meets the aforesaid description and contains an appropriate slot **5** and reservoir **6**. For example the entire shoe slot and reservoir can be made from one solid block of material and the reservoir can be of any suitable cross-section, e.g., circular, square, etc.

FIG. 1 illustrates a preferred method of operation of the apparatus, that is, in applying onto web **1** already coated with a wet previous coating **12**, an overcoating **13**. This apparatus is not, of course, limited to overcoating, and can be used for coating dry uncoated webs equally well.

During normal operation, the shoe is supplied with enough coating liquid from the reservoir via the slot to completely fill the area between the surface of the web on the coating roll and the corresponding area of the shoe plus sufficient excess to overflow at least the leading edge of said shoe and preferably the leading and trailing edges of said shoe. This condition of overflowing at least the leading edge is of paramount importance to the success of the operation and by locating the slot closer to the trailing edge, overflowing of this edge during the coating operation is assured. This has the effect of providing a much broader coating bead than is obtained in the prior art equipment.

The size of the shoe may vary over a wide range but ordinarily a shoe covering from 30°–100° of arc of the coating roll will be found to be satisfactory and from 60° to 100° of arc is preferred. It is important that the arcuate surface of the shoe from which the liquid is applied to the web be machined to the approximate radius of the coating roll and, as is customary in the art, have a smooth finish. The length of the shoe is dependent on the width of web to be coated and on the width of the coating it is desired to apply to the web. To achieve a coating of the entire width of the web, the shoe must be as long as the width of the web. In most cases, however, the shoe should be a fraction of an inch shorter than the width of the web to avoid coating the edges which are normally removed as selvedge and discarded when the web is slit, as is common practice in the manufacture of photographic film. In either case the length of the slot should be shorter than the width of the web to insure against coating the opposite side of the web. The width of the slot may vary from 0.020 inch to about 0.250 inch depending upon the properties of the solution to be coated. Ordinarily, however, in coating aqueous gelatin liquids such as gelatino-silver halide emulsions or auxiliary layers such as aqueous gelatin antiabrasion solutions, the slot width may be about 0.030 inch. The distance of the shoe from the web may vary depending upon the type of liquid it is desired to apply. In the photographic coating art this will ordinarily vary from 0.010 to 0.100 inch.

Of course it will be understood that the above described apparatus must be fitted with the necessary accessories such as a suitable outlet for the overflow trough to recirculate or otherwise handle the overflow liquid. The shoe must also be fitted with suitable positioning means for maintaining the shoe and coating roll in the proper relationship. The necessity for these arrangements will be obvious and such arrangements are well-known to the technicians skilled in the coating art.

By means of the novel coating apparatus described above it is possible to maintain sufficient intimate contact of the coating liquid and the web throughout the arc of the shoe. This results in an increased liquid to web contact time plus increased contact pressure. These conditions allow a coating to be applied at high coating speeds to a wet surface without repellency. This is very important in the manufacture of photographic elements where it is usually desired to apply successive layers to a web in a rapid and continuous operation. The novel features of the invention may also be advantageously utilized when only a single coating is to be applied to a web.

The invention will now be further illustrated in and by the following examples.

Example I

A gelatino-silver bromochloride lithographic emulsion was coated on the support described in Example I of Alles et al., U.S. 2,627,088 at 100 feet per minute by the conventional skim coating technique using an air knife doctor to remove the excess emulsion and smooth the coated layer. The coated film was then led to a second coating station which included the novel apparatus of the invention. The coating shoe covered about 79° of the arc of the coating roll and had a slot width of 0.100 inch. The coating shoe was positioned 0.020 inch from the web. A 1% aqueous gelatin antiabrasion solution of conventional formulation was fed to the reservoir of the coating shoe with sufficient pressure to cause a constant overflow at both the trailing and leading edge of said shoe at coating speed. An air knife doctor was positioned just beyond the leading edge of the coating shoe to remove any excess solution and give a smooth coating having a dry coating weight of 2.5 mg./dm.^{2} over the wet emulsion layer. The resulting layer was free of repellent spots and was satisfactory as an antiabrasion layer.

Example II

A series of coatings were carried out in which a paper support was coated with a silver iodobromide emulsion at various speeds from 60 to 140 feet per minute using an air knife doctor. The emulsion coated paper supports were led into a conventional chilling chamber to set the undried emulsion. The coated webs were then led to a second coating station wherein a coating shoe as described above was used to apply a 1.75% aqueous gelatin overcoating solution of conventional type to a dry coating weight of 10 mg./dm.^{2}. The shoe applicator covered approximately 79° of arc of the coating roll and the slot was 0.100 inch in width. The shoe was positioned 0.020 inch from the web. The gelatin solution was gravity fed to the reservoir of the coating shoe in sufficient quantity to cause an overflow of both the trailing and leading edges of the coating shoe at coating speed. An air knife doctor was positioned just beyond the leading edge of the coating shoe to remove any excess solution and to smooth the coating. In all cases a smooth antiabrasion layer resulted which showed no repellent spots or other defects. Conventional skim coating of a similar overcoating solution at the above coating speeds showed repellent spots and coating streaks.

Example III

A gelatino-silver bromochloride lithographic emulsion was coated on the film support described in Example I by a coating apparatus having a coating shoe which covered about 32° of the arc of the coating roll and had a slot width of 0.100 inch. The film was coated at 120 feet per minute. The shoe was positioned approximately .020 inch from the web. Before the coated layer was dried, the film was led back through the coating station to apply a second layer of emulsion at the above coating speed. The resulting coating was free of repellent spots and was of satisfactory coating quality.

The above coatings were also carried out using coating shoes which covered 40°, 50°, 60° and 79° of arc of the coating roll.

As indicated above, it is important that the coating shoe be fabricated so that it conforms to the curvature of the coating roll and can be positioned to give a substantially uniform clearance throughout the shoe's arcuate coverage of the coating roll. This is also important in regard to the leading and trailing edges of the coating

shoe. Because of the close clearances (0.010–0.100 inch) between the web and the coating shoe, the positioning means for adjusting the shoe must be precise and easy to manipulate because, as will be apparent, under some conditions of continuous coating, it will be necessary to move the shoe away from the web to allow the passage of a splice or for other reasons and then bring the shoe back into position accurately and quickly. As indicated above such means are well known in the art and form no part of the instant invention.

If the coating solution is fed to the reservoir under pressure by pumping means as opposed to gravity feed it is desirable that the pump be of a pulse-less type. Web alignment should be held within reasonably practical limits for good quality coating.

Although the drawing illustrates a certain configuration for the coating shoe and reservoir with a single slot connecting them the invention is not limited to these structures. The coating shoe may be connected to the reservoir by more than one slot. Also the reservoir need not be integral with the coating shoe but may be a separate structure attached to said shoe by appropriate means with interconnecting passages.

The advantages of using the novel coating shoes of the invention are many, particularly in the coating operations associated with the manufacture of photographic products, as opposed to the conventional skim coating or bead roll methods.

By maintaining close clearances between the coating roll and the concentric shoe through an arc of from 30° to 100°, it is possible to maintain extended contact of coating liquid to web. This extended contact results in an increased liquid to web contact time plus increased contact pressure. Both of these conditions permit the application of multiple coatings of similar liquids in rapid succession at high coating speeds without repellent spots or coating defects. Of course, the apparatus is also applicable to single coating operations or to applying multiple coatings where the liquid is to be coated over a previously applied coating which has been dried.

The use of the novel coating apparatus also permits more precise control of the width of the coating to be applied to a web. By using a coating shoe of any desired length a partial coating may be applied to a portion only of the web width and multiple strips of coatings of different composition are possible, arranged in continuous fashion or slightly separated. This minimizes the cost of selvedge which is ordinarily removed from the web in later manufacturing operations. A very short shoe may also be used in stripe coating where it is desired to apply a narrow band of special material to a web. This would be useful in applying a magnetic sound track to a cine positive film.

Because of the close clearances between the web and the shoe, it is possible to achieve a beneficial mechanical doctoring from the leading edge of said shoe. This feature can be used to advantage in high speed coating to supplement air knife doctoring. In this connection the leading edge and the shoe itself can advantageously act to separate the excess liquid blown back by the air knife doctor from the liquid which has been coated on the web. This minimizes coating defects such as streaks caused by turbulence and rivulets formed as the result of such turbulence.

The relatively large forced surface contact between coating solution and web is, in effect, a greatly enlarged coating bead which permits smoother and more uniform pick-up by the web of the coating liquid which, in turn, provides a greatly improved coating quality as opposed to the devices of the prior art.

The novel coating shoes of this invention completely avoid the difficulties associated with having quiescent pools of coating liquid as in conventional coating pans such as settling and temperature and viscosity variations. Related to the above advantage is the fact that the novel

coating shoes eliminate contact of the coating liquid with the surrounding atmosphere immediately before applying the liquid to the web and thereby reduce coating streaks caused by surface scum.

What is claimed is:

1. A method of applying a desired wet thickness of coating material onto a moving flexible web which comprises continuously moving said web on a cylindrical guide roll, applying a stream of coating material to a locus on the web while said web is in contact with said guide roll, spreading said stream of coating material out into a thin layer of substantially uniform thickness of from 0.010 to 0.100 inch by the action of an arcuate surface spaced at a close and substantially uniform distance from said web and maintaining contact between said layer and said web throughout from 30° to 100° of arc of said guide roll by means of said arcuate surface.

2. A method of applying a desired wet thickness of coating material onto a moving flexible web which comprises continuously moving said web on a cylindrical guide roll, applying a stream of coating material to a locus on the web while said web is in contact with said guide roll, spreading said stream of coating material out into a layer of substantially uniform thickness of from 0.010 to 0.100 inch by the action of an arcuate surface spaced at a substantially uniform distance of from 0.010 to 0.100 inch from said web, maintaining contact between said layer and said web throughout from 30° to 100° of arc of said guide roll by means of said arcuate surface and impinging a stream of air on the coated web at an impingement line transverse to the direction of web travel to doctor said coating material to said desired wet thickness.

3. A method of uniformly applying a desired wet thickness of overcoating material onto a rapidly moving flexible web, said web having at least one wet previous coating on the surface thereof, which comprises continuously moving said web on a cylindrical guide roll, applying a stream of overcoating material to a locus on the web while said web is in contact with said guide roll, spreading said stream of overcoating material out into a layer of substantially uniform thickness of from 0.010 to 0.100 inch by the action of an arcuate surface spaced at a substantially uniform distance of from 0.010 to 0.100 inch from said web, maintaining contact between said overcoating layer and said web throughout from 30° to 100° of arc of said guide roll by means of said arcuate surface and impinging a stream of air on the overcoated web at an impingement line transverse to the direction of web travel to doctor said overcoating material to said desired wet thickness.

4. A method of uniformly applying a desired wet thickness of coating material onto a moving flexible web which comprises continuously moving said web on a cylindrical guide roll, applying a stream of coating material to a locus on the web while said web is in contact with said guide roll, spreading said stream of coating material out into a layer of substantially uniform thickness of from 0.010 to 0.100 inch by the action of an arcuate surface having leading and trailing edges spaced at a substantially uniform distance of from 0.010 to 0.100 inch from said web and having a radius essentially equal to the radius of said guide roll, maintaining contact between said layer and said web throughout from 30° to 100° of arc of said guide roll by means of said arcuate surface and mechanically doctoring said layer with the leading edge of said arcuate surface.

5. In an apparatus for continuously coating a web with coating material, a guide roll adapted to move said web through the apparatus, an arcuate coating shoe covering from 30° to 100° of arc width whose entire length is positioned parallel to the axis of said guide roll and whose entire arcuate surface is closely adjacent to the surface of the guide roll thereby forming an arcuate space between said guide roll and said coating shoe at a substantially

uniform distance of from 0.010 to 0.100 inch, said coating shoe having a uniform longitudinal slot therein extending almost the entire width of said web and about 0.020 to 0.250 inch wide through which said coating material is supplied to said web by suitable means in more than sufficient quantity to entirely fill the arcuate space between said coating shoe and said guide roll, and a reservoir containing said coating material from which it is supplied to said web.

6. In an apparatus for continuously coating a web with a layer of coating material at a desired wet thickness, a guide roll adapted to move said web through the apparatus, an arcuate coating shoe covering from 30° to 100° of arc width whose entire length is positioned parallel to the axis of said guide roll and whose entire arcuate surface is closely adjacent to the surface of the guide roll thereby forming an arcuate space between said guide roll and said coating shoe at a substantially uniform distance of from 0.010 to 0.100 inch, said coating shoe having a radius essentially equal to the radius of said guide roll and having a uniform longitudinal slot therein extending almost the entire width of said web and about 0.020 to 0.250 inch wide through which said coating material is supplied to said web by suitable means in more than sufficient quantity to entirely fill the arcuate space between said coating shoe and said guide roll, air knife means for directing a stream of air at said layer at an impingement line transverse to the direction of web travel, said stream of air being adapted to doctor said layer to said desired wet thickness, and a reservoir containing said coating material from which it is supplied to said web.

7. Apparatus according to claim 6 wherein said arcuate coating shoe covers from 60° to 100° of arc width.

References Cited in the file of this patent

UNITED STATES PATENTS

2,135,406	Macdonald	Nov. 1, 1938
2,168,997	Lankes et al.	Aug. 8, 1939
2,541,479	Nadeau et al.	Feb. 13, 1951
2,679,231	Pomper et al.	May 25, 1954