July 9, 1929. M. L. REED 1,720,607

NOTEBOOK AND COPY HOLDER

Filed March 15, 1928

Fig. 1.

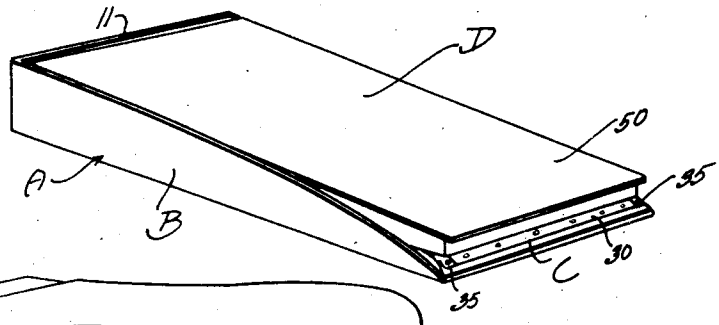

Fig. 2.

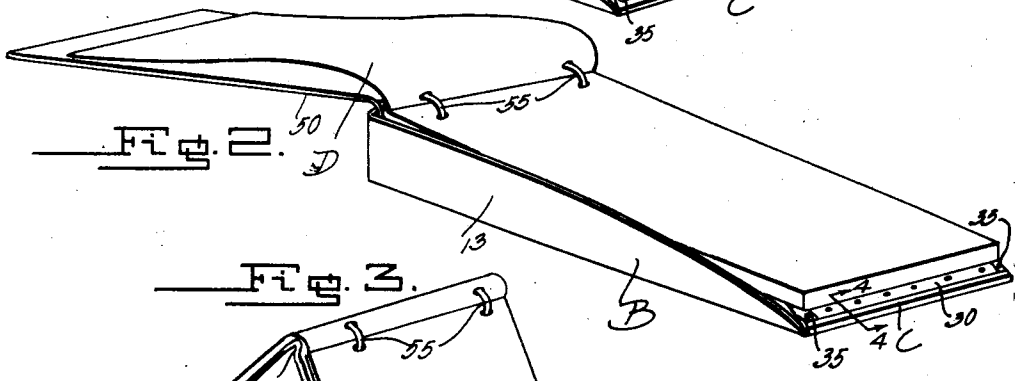

Fig. 3.

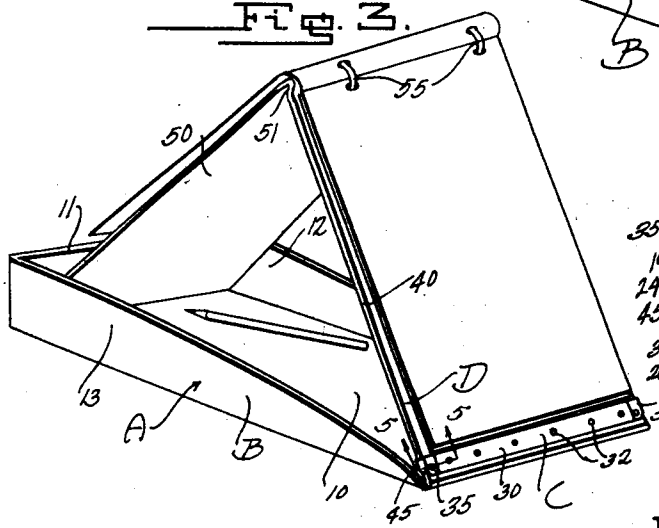

Fig. 5.

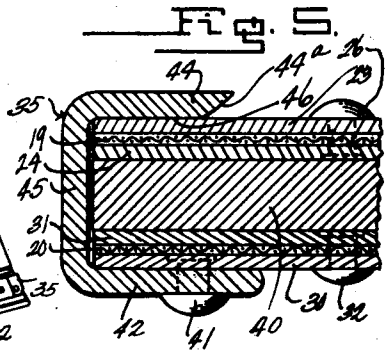

Fig. 6.

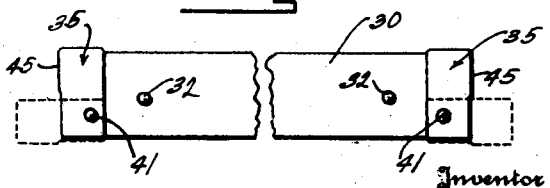

Fig. 4.

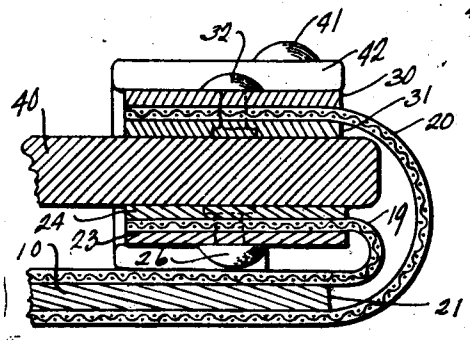

Inventor
Merta L. Reed.

By Lancaster and Allwine
Attorneys

Patented July 9, 1929. 1,720,607

UNITED STATES PATENT OFFICE.

MERTA L. REED, OF BIG RAPIDS, MICHIGAN.

NOTEBOOK AND COPY HOLDER.

Application filed March 15, 1928. Serial No. 261,867.

This invention relates to improvements in copy holders.

The primary object of this invention is the provision of an improved device for holding stenographer's copy; the same embodying improved means for supporting a holder upon which the copy or notebook is carried in a novel relation.

A further object of this invention is the provision of an improved copy holding device, which is neat, light in weight, and which may be economically manufactured, and will maintain a notebook or manual in perfect position for reading of typing; which will permit the notebook to be placed for facile taking of notes; and which provides a tray for holding pen, pencil, eraser, and the like.

Other objects and advantages of this invention will be apparent during the course of the following detailed description.

In the accompanying drawing, forming a part of this specification, and wherein similar reference characters designate corresponding parts throughout the several views,

Figure 1 is a perspective view showing the improved copy holding device in a collapsed, compacted relation.

Figure 2 shows the device in position to permit the taking of notes.

Figure 3 shows the book portion of the device in copying position upon its tray.

Figure 4 is a sectional view taken substantially on the line 4—4 of Figure 2 through the hinged attaching means of the tray, by means of which the note book or loose-leaf binder cover is hinged to the tray.

Figure 5 is a sectional view taken through an end of the attaching means, substantially on the line 5—5 of Figure 3, showing the clamp for detachably holding the note book cover or binder in position.

Figure 6 is a detail of the attaching means.

In the drawing, wherein for the purpose of illustration is shown only a preferred embodiment of the invention, the letter A may generally designate the improved copy holder, which may comprise a tray or supporting member B, having attaching means C hinged thereon for detachably connecting a binder or note book cover or holder D thereon in a novel relation; the latter being adapted to hold an ordinarily flexible note book, or similar means for copying notes, etc., such as a loose-leaf binder.

The tray B may be made of any approved material. It may be made of card-board, fabrikoid leather, composition covered metal, or the like. It includes a base plate or portion 10 having an outer end wall 11 extending normal thereto, and having side walls 12 and 13 at opposite sides thereof, upstanding therefrom. The side walls 12 and 13 diminish gradually in height from the outer end wall 11 and slope to a vanishing point close to the binder or note book attaching means C.

The attaching means C is mounted at the end of the base 10 opposite the wall 11. The preferred means for securing and providing the attaching means C, preferably consists in extending flexible flaps 19 and 20. comprising the covering of the preferably rigid base 10, beyond the end edge 21 of the base plate 10, as shown in Figure 4 of the drawing. Across the margin of the flexible flap 19, at opposite sides thereof, metal strips 23 and 24 may be secured, as by small rivets 26, in order to reinforce the material of the said flap 19, and render the attaching means suitable for properly securing a note book or binder in position. In similar manner, metal strips 30 and 31 are provided at opposite sides across the marginal portion of the flap 20, said metal strips 30 and 31 being secured as by rivets 32. The thus metal strip reinforced marginal portions of the flaps 19 and 20 may receive therebetween the end portion of a note book holder or binder D, at the back thereof, as shown in Figure 4 of the drawing. Inasmuch as the flaps 19 and 20 extend beyond the edge 21 of the rigid portion of the base plate 10, it is perfectly apparent that the flaps 19 and 20 hinge the attaching means C, so that the binder or holder D which is secured thereto may be swung at the end of the tray B.

In order to secure the back flap of the holder or binder D against detachment from between the metal strip reinforced margins of the flaps 19 and 20, it is preferred to provide swinging channel shaped or U-shaped clamps 35, which may be secured over the ends of the reinforced metal margins of the flaps 19 and 20, to secure the preferably rigid back 40 of the holder or binder D between said metal reinforcing edges of the flaps 19 and 20. These clamps 35 are of the type shown in Figures 3 and 5 of the drawing, the same being hinged, preferably by a rivet 41, on one of the legs 42 thereof, preferably to the outer metal strip 30 of the flap 20. This permits the clamp 35 to swing in the same plane as the plane of the metal reinforced margin of the flap 20. The clamp 35 is of channel shape,

providing the legs 42 and 44 connected by a portion 45, and thus providing a socket 46 which may be moved to receive the metal edge reinforced ends of the flaps 19 and 20 to clamp the same together with the back 40 of the binder or holder D therebetween, as shown in Figure 5. The clamps 35 are provided at each of the ends of the attaching means C, and they provide a means for quickly and efficiently clamping the holder or binder D in a detachable relation, as can readily be understood. They have beveled edges 44a, to enable facile operation.

The holder or binder D may be of the usual construction, preferably including the rigid back and front covers 40 and 50, hinged in any approved manner at 51, at the ends of the covers remote from the attaching means C, when the latter folds the binder D in position. Suitable means may be maintained at the hinge 51 of the binder covers 40 and 50, to hold an ordinary stenographer's note book in position, or rings 55 may be provided to hold loose-leaves in the holder D, which then serves as a cover for the loose leaves.

The holder D is of such length that the same may be collapsed into the tray compartment between the walls 12 and 13 so that the hinged end 51 thereof lies adjacent to the end wall 11. This position is illustrated in Figure 1. As shown in Figure 2, when the operator desires to take notes, the front flap 50 of the cover or holder D is thrown open, and the stenographer takes notes on the leaf lying in a flat position within the tray. For copy work the holder D is hingedly moved at the attaching means C to raise the end of the holder D from adjacent the end wall 11, and the flap 50 of the holder or binder D is thrown back into a V-shaped relation with the back 40 of the cover or binder D, and the free edge of the flap 50 engaged at the juncture of the base 10 and wall 11 of the tray D, against the latter, which acts as a prop for holding the back and front 40 and 50 of the holder or binder D in position, so that the note book pages are inclined or canted at an angle to the perpendicular, for easy visibility during copying.

From the foregoing description of this invention it is apparent that a novel copy holder has been provided, which will enable note books of stenographer's size to be held in a detachable relation. If the note book is of the rigid back type it may be clamped as a unit in the attaching means C, as above described. If the note book is of the flexible paper type it may be clamped at the end thereof in a binder D, which may be detachably held by the clamping means C in the relation above described. If the binder is of the loose-leaf type it may also be clamped by the attaching means C as above described.

Various changes in the shape, size, and arrangement of parts may be made to the form of invention herein shown and described, without departing from the spirit of the invention or the scope of the claims.

I claim:

1. In a notebook and copy holder the combination of a supporting tray comprising a base plate having an upstanding end wall and side walls, and notebook-attaching means at the end of the base plate opposite the end wall, said notebook-attaching means comprising spaced hinged flaps and means to clamp them together upon a portion of a notebook.

2. In a notebook holding device the combination of a tray comprising a base plate having an end wall and side walls extending from the end wall with a gradually reducing height toward the opposite ends of the base plate, the said opposite end of the base plate having a pair of hinged flaps thereon, and means to clamp a note book between the flaps.

3. In a copy holder a supporting base plate having a prop-engaging extension at one end and at the opposite end having clamping means, a holder comprising a pair of hingedly connected substantially rigid front and back portions, the clamping means of the base plate being adapted to engage the opening end of the holder back whereby the holder front and back may be collapsed upon the base plate or opened thereon and the free end of the front portion of the holder propped against the engaging extension of the base plate for holding the front and back of the holder in an inverted V-shaped leaf-supporting position.

4. In a copy holder the combination of a base plate, a prop-engaging extension at one end thereof, a notebook, and clamping means at the end of the base plate opposite the prop-engaging extension for clamping a back of the notebook at its opening end thereto whereby the notebook may be collapsed onto the base plate or opened and the free end of its back propped against the prop-engaging means to hold the notebook front and back in an inverted V-shaped relation.

5. In a copy holding device a base plate of rigid formation having a pair of end flaps hinged thereto, said flaps along their marginal portions being substantially rigidly reinforced, and clamping devices on the ends of the marginally reinforced portions of the flaps for clamping the said reinforced ends of the flags together for holding a portion of the notebook therebetween.

6. In a device of the class described a back having a pair of outwardly extending hinged flaps thereon with reinforced marginal edges, and means for clamping the reinforced marginal edges in a detachable relation for clamping some article therebetween.

7. In a device of the class described a back having a pair of outwardly extending hinged flaps thereon with reinforced marginal edges,

means for clamping the reinforced marginal edges in a detachable relation for clamping some article therebetween, said clamping means comprising a pair of hinged channel clamps, one at each end of the marginal reinforcing of the flaps.

8. In a copy holder a tray comprising a back plate having side walls and an end wall, the back plate at the end opposite the end wall having flexible flaps extending therefrom, the marginal portions of the flexible flaps being substantially rigidly reinforced thereacross, and means for holding said reinforced edges in a clamping relation with some article clamped therebetween.

MERTA L. REED.