W. V. GAGE.

EMERGENCY PACKET.

APPLICATION FILED NOV. 24, 1911.

1,116,687.

Patented Nov. 10, 1914.

3 SHEETS—SHEET 1.

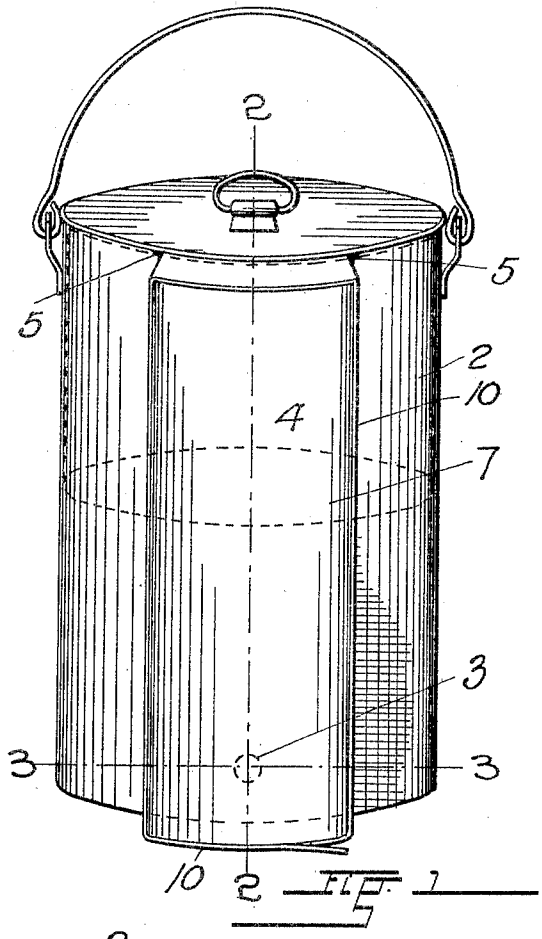

Fig. 1

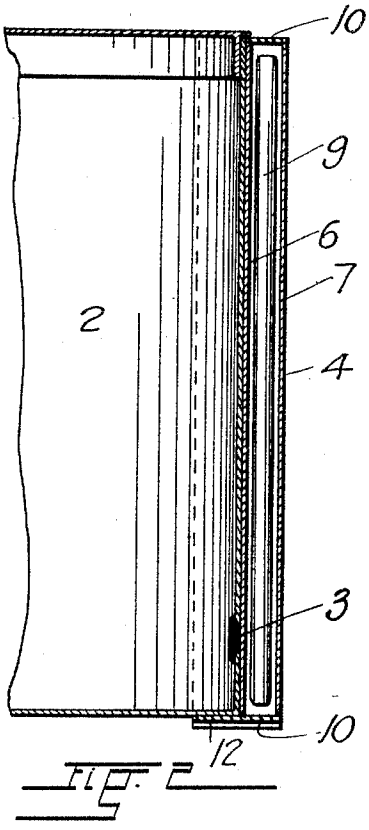

Fig. 2

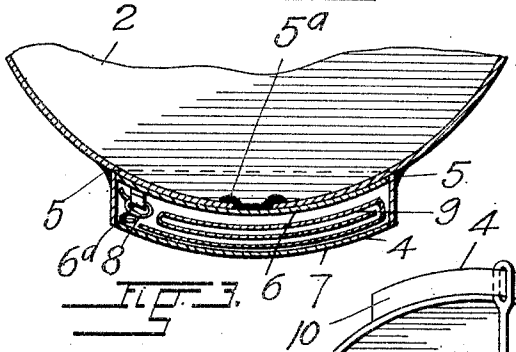

Fig. 3.

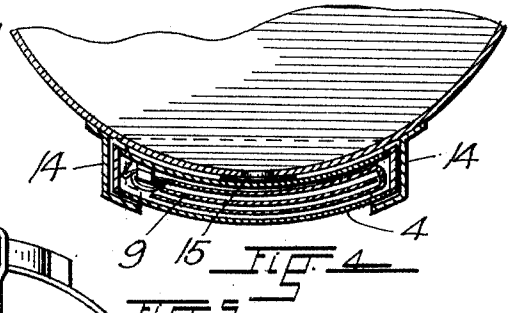

Fig. 4.

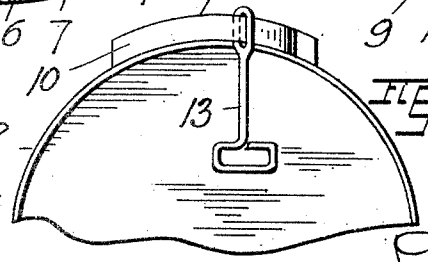

Fig. 5.

WITNESSES:

L. Rhodes

F. H. Cuno.

INVENTOR.

W. V. Gage.

BY

ATTORNEY.

W. V. GAGE.

EMERGENCY PACKET.

APPLICATION FILED NOV. 24, 1911.

1,116,687.

Patented Nov. 10, 1914.

3 SHEETS—SHEET 2.

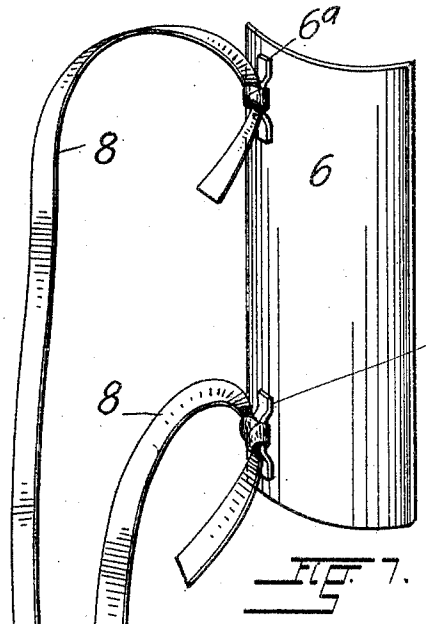

Fig. 7.

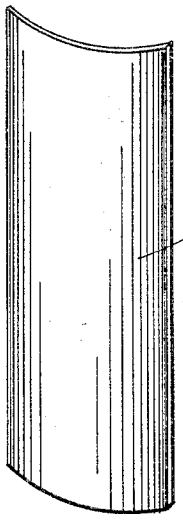

Fig. 8.

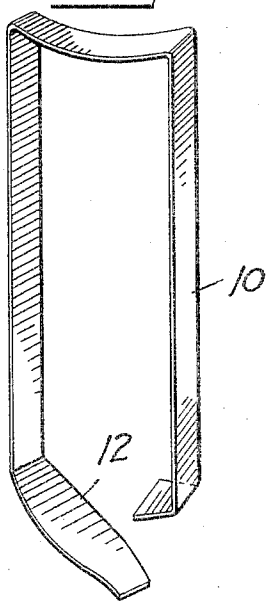

Fig. 9.

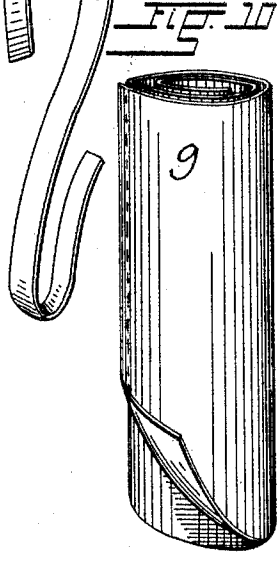

Fig. 10

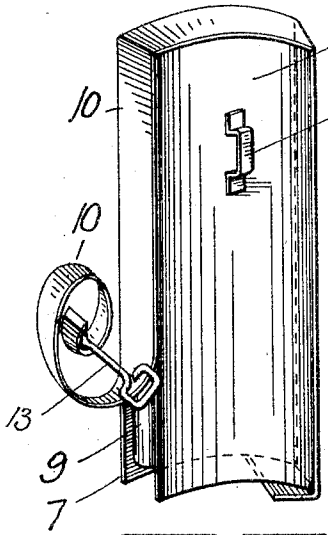

Fig. 6.

WITNESSES:
R. Rhoades
F. H. Cuno.

INVENTOR.
W. V. Gage

BY
ATTORNEY.

THE NORRIS PETERS CO., PHOTO-LITHO., WASHINGTON, D. C.

W. V. GAGE.

EMERGENCY PACKET.

APPLICATION FILED NOV. 24, 1911.

1,116,687.

Patented Nov. 10, 1914.

3 SHEETS—SHEET 3.

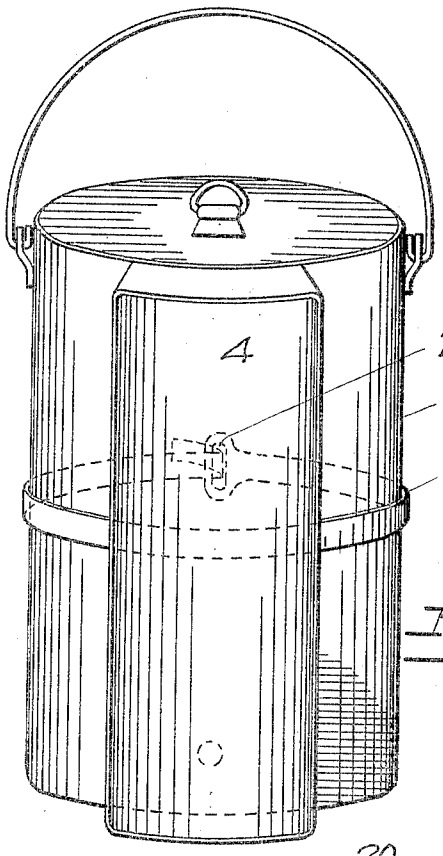

FIG. 12

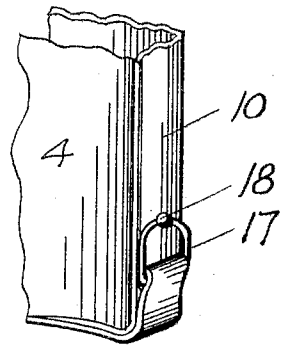

FIG. 11

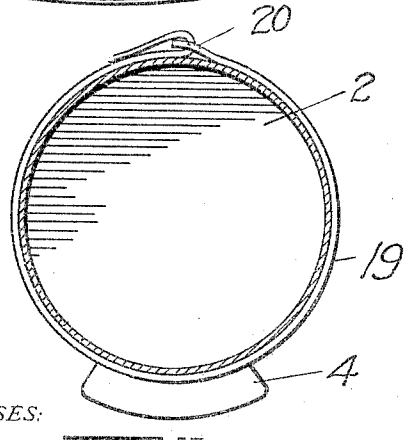

FIG. 13

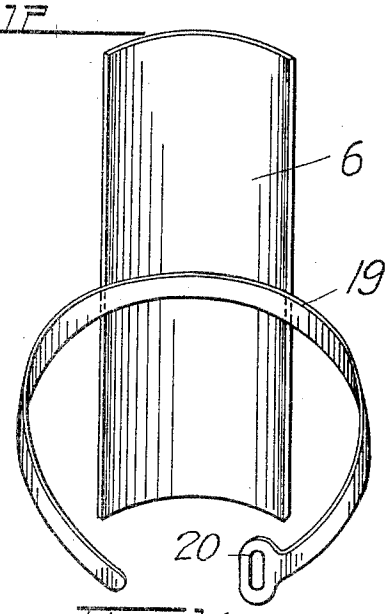

FIG. 14

WITNESSES:

F. H. Burns.

L. Rhoades

INVENTOR.

W. V. Gage.

BY

ATTORNEY.

THE NORRIS PETERS CO., PHOTO-LITH., WASHINGTON, D. C.

UNITED STATES PATENT OFFICE.

WILL V. GAGE, OF PRIMERO, COLORADO, ASSIGNOR OF ONE-HALF TO ARTHUR L. DAIN, OF TRINIDAD, COLORADO.

EMERGENCY-PACKET.

1,116,687. Specification of Letters Patent. Patented Nov. 10, 1914.

Application filed November 24, 1911. Serial No. 662,155.

To all whom it may concern:

Be it known that I, WILL V. GAGE, a citizen of the United States, residing at Primero, in the county of Las Animas and State of Colorado, have invented certain new and useful Improvements in Emergency-Packets, of which the following is a specification.

My invention relates to emergency packets and its object resides in the provision of a packet of simple and compact construction, which serves to provide in case of accidental bodily injury, the necessary appliances for alleviating the suffering of the patient and giving remedial treatment to the injured part until the services of a surgeon can be obtained.

The packet includes to this end, in its component parts, splints, bandages, and other remedial agents, in such a manner that while they are fully protected against contamination, they are available for immediate use to set a broken limb, protect an open wound, control a hemorrhage, or in short to render first aid in any case of physical hurt.

The packet is especially adapted for use of miners and workmen in general, who in the practice of their trade, are most liable to injury and it is a further object of my invention to so construct the packet that it must or may readily be carried by the workman to and from the place at which he is employed, in a manner which reduces the liability of its being forgotten or misplaced, to a minimum.

With these and other less important objects in view, I provide an oblong case, curvilinear in cross-section, and composed of two curved plates well suited to be used as splints, and detachably connected along their edges by a soldered strip of pliable material which hermetically seals the case and thus protects the contents thereof against contamination and allows of the daily washing or cleaning of the pail to which the packet is attached, without injury to the packet contents.

The contents of the case consist preferably of a roll of aseptic gauze for covering a wound or injured part, and tapes which may be attached at the ends of one of the splints for the purpose of securing said splints in place over the aseptic gauze on the fractured or otherwise injured limb.

While a packet thus constructed may be readily carried in a pocket or on the belt of the workman, it is especially adapted to be attached to a dinner-pail, an article which is invariably carried by the workman in going to and from his work, which is always at hand near the place at which he is employed and which of all things is least likely to be forgotten or misplaced.

To compel the owner of the pail to at once replace a packet removed in case of emergency, by another before he can again use the dinner-pail, the latter may be provided with an opening which normally prevents its being used for carrying liquids, and the emergency packet is in this case attached to the pail in such a manner that it closes the opening and thus renders the receptacle capable of containing liquids as well as solid food.

An embodiment of my invention has been shown in the accompanying drawings in the various views of which like parts are similarly designated and in which,

Figure 1 represents a perspective view of a dinner pail with the emergency packet attached thereto, Fig. 2, a fragmentary, longitudinal section taken along the line 2—2, Fig. 1, and drawn to an enlarged scale, Fig. 3, an enlarged fragmentary, transverse section along the line 3—3, Fig. 1, Fig. 4, a similar section illustrating a modified method of attaching the packet to a pail. Fig. 5, a fragmentary underneath view of a dinner-pail showing the application of a device adapted to open the packet and separate the splints included in its construction. Fig. 6, a perspective view of the packet with the band which normally connects its sides, partially removed, Figs. 7 and 8 perspective views of the splints as they appear when detached, Fig. 9, a perspective view of the band which normally connects the sides of the packet and hermetically seals the same, Fig. 10, a perspective view of the roll of aseptic gauze contained within the case formed by the splints and the connecting

band, Fig. 11, a fragmentary, perspective view of the packet showing a modified method of securing the end of the band which connects the sides thereof, Fig. 12, a perspective view similar to Fig. 1 showing a modified method of securing the packet to a dinner-pail, Fig. 13, a plan view of the construction shown in Fig. 12, and Fig. 14, a view of the inside splints of the packet shown in Fig. 12 to which the band by which the latter is fastened to the pail, is attached.

Referring to the drawings by numerals, 2 designates a dinner-pail having in its lower portion, which ordinarily contains coffee or other liquid, an opening 3.

The emergency packet designated by the numeral 4, is placed against the circumferential surface of the pail over the hole, and securely attached to the pail by fillets of solder 5, while a layer 5^a of the same material applied from the inside of the pail will effectively prevent possible leakage through the opening 3.

The emergency packet is composed of two curved side-plates 6 and 7 which when detached, are well adapted to serve as splints for keeping the bones of a fractured limb in a fixed position.

One of the plates, 6, has attached upon its inner surface, by means of loops 6^a or other suitable devices, two tapes 8 which in practice serve to retain the splints in place on the injured limb and which when the packet is intact, are folded and placed within the same together with the roll of aseptic gauze 9 or such other articles as may be found to be of use in case of emergency in affording relief to the sufferer.

The two side-plates 6 and 7 of the case are connected by means of a metal strip or band 10 which is secured along the edges thereof by solder, a method preferably over others as it not only permits ready disconnection of the side plates, but also hermetically seals the packet so as to maintain the contents thereof in the proper condition for an indefinite period.

When the packet is designed to be carried on a dinner bucket, the connecting strip 10 may be formed with a lip 12 which furnishes a finger-hold to facilitate removal of the strip and which by engagement with the bottom-surface of the pail, as shown in Fig. 2, holds the packet against upward displacement. The lip 12 may be omitted and a slotted key 13 attached to the end of the strip, as shown in Fig. 5, which while having the same function as the lip 12 when placed in engagement with the bottom of the dinner pail, provides at the same time ready means for removing the band which connects the side-plates of the packet, or a wire ring 17 may for the same purpose be attached to the end of the band 10, as shown in Fig. 11, and held in place by means of a drop of solder 18.

While the method of attaching the packet to a dinner pail, as illustrated in Figs. 1 and 2 is preferred by reason of its combined simplicity and practicability, it will be readily understood that other means for detachably connecting the packet to the pail may be resorted to within the scope of my invention. Of the many methods which may be employed to this purpose, one is shown in Fig. 4 of the drawings in which the packet is held on the pail between two longitudinal flanges 14, and a gasket 15 of rubber or other elastic material is used to stop the hole in the pail while the packet is in place.

In the constructions shown in Figs. 12, 13 and 14 a strip 19 of tin or other similar material is secured upon the concave surface of the packet and provided at one of its ends with a slot 20, through which its other end may be passed to secure the packet in place upon a dinner pail as shown. This form of construction has the additional advantage that the strips 8 shown in the preferred form, may be eliminated and the band 19 used to hold the splints in place on the injured limb.

While the connection of the packet with a dinner pail is most useful in that it compels the workman to have it at all times, near him, it will be observed that the device is by its compactness and curved form, well adapted to be carried in the pocket, or it may, if so desired, be carried on a belt around the waist, in which case a loop 16, as shown in Fig. 6, is secured upon its concave surface. When, in case of physical hurt, immediate attention to the injured part is required, the packet if attached to a dinner pail, is removed therefrom by drawing a nail, knife-blade or other sharp instrument through the solder fillet and a similar instrument, or, if available a key, is used to remove the band which connects the two side-plates, as illustrated in Fig. 6. The plates 6 and 7 are now in a condition to be used as splints, the tapes are ready to secure the splints in place on a fractured limb, and the aseptic gauze or what other remedial means may have been contained in the packet are at hand to cover the wound, control the hemorrhage, protect the flesh from contact with the splints or render such other services as the nature of the case may demand. While the packet is being removed from the pail, the solder is broken away from the hole 3 in the bottom portion thereof, and the pail is in consequence rendered incapable of containing liquid until another packet has been secured in the place of the one removed.

Having thus described my invention what I claim and desire to secure by Letters-Patent is:

In combination, a receptacle having separate from the opening through which it is normally filled or emptied, an aperture adapted to provide an outlet for its liquid contents, and an emergency packet removably connected with said receptacle so as to close the said aperture.

In testimony whereof I have affixed my signature in presence of two witnesses.

WILL V. GAGE.

Witnesses:
GUY M. HOWE,
W. E. HUGHES.

Copies of this patent may be obtained for five cents each, by addressing the "Commissioner of Patents, Washington, D. C."