Oct. 3, 1939. J. P. TARBOX 2,174,863

FIBER TREATMENT

Filed June 22, 1937

FIG. 1

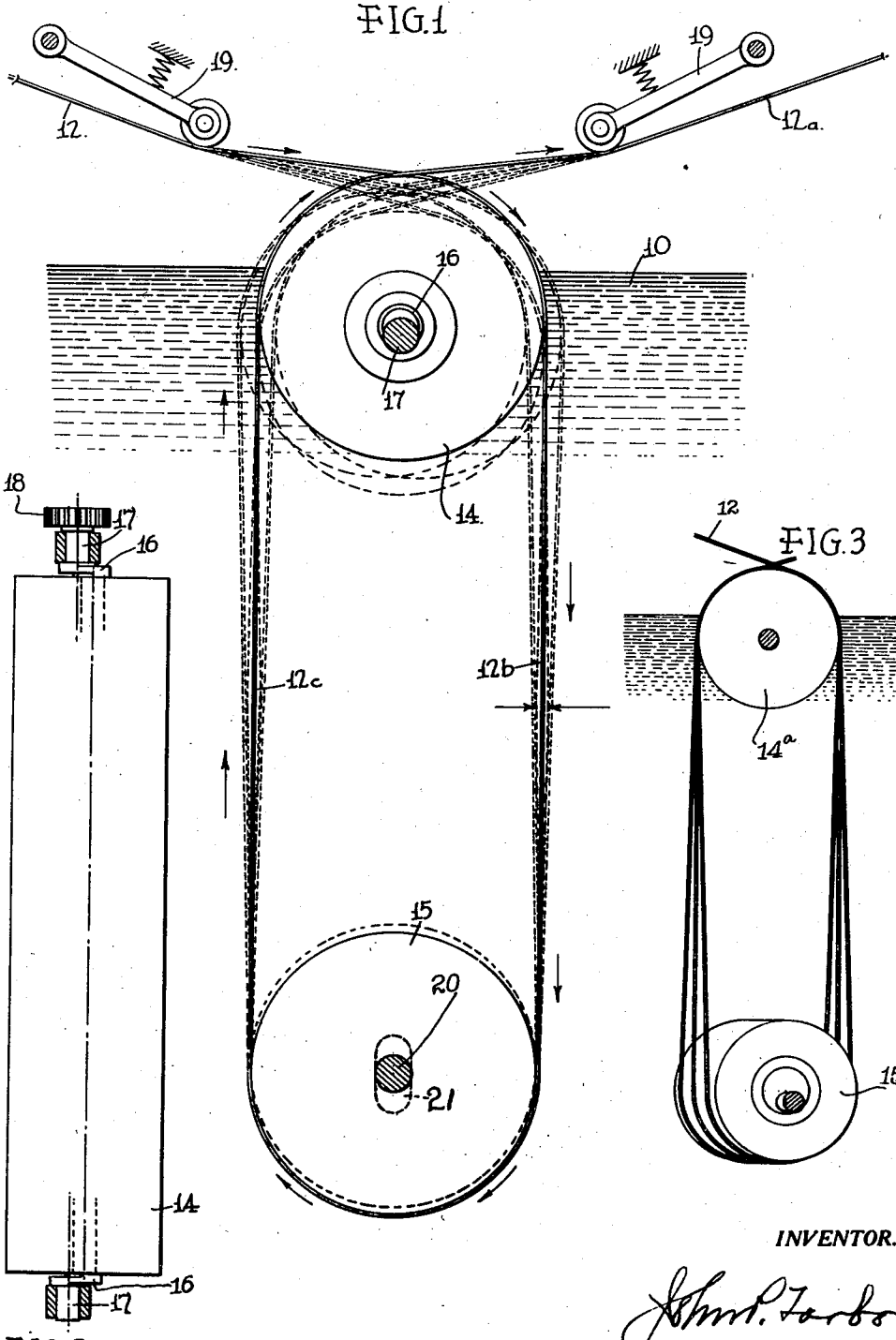

FIG. 2

FIG. 3

INVENTOR.

John P. Tarbox

Patented Oct. 3, 1939

2,174,863

UNITED STATES PATENT OFFICE

2,174,863

FIBER TREATMENT

John P. Tarbox, Philadelphia, Pa., assignor to New Process Rayon, Inc., Gloucester, N. J., a corporation of Delaware

Application June 22, 1937, Serial No. 149,641

2 Claims. (Cl. 8—151)

This invention relates to improvements in apparatus for and method of treating textile fibers and more particularly to the continuous treatment of an untwisted high denier roving such as rayon staple.

During the production of continuous fibers such as rayon fibers, certain of the steps include the treatment of the fibers in one of more liquid baths and it has heretofore been suggested that the path of the roving be into and out of a suitable liquid by which a continuous washing of the roving filaments in the liquid is brought about.

I have discovered, however, that contrary to prior belief, a continuous uniform passage of the roving through the bath does not give the most effective washing of the filaments by the liquid and this is apparently due to the carrying of partially spent liquid within the roving. I find that a variation in the tension of the roving as it passes through the bath is far superior to a uniform tension as this change of tension causes a squeezing out of partially spent liquid and an absorption of the unspent liquid from the bath. This movement of the liquid through the roving also increases the surface area available to contact with the liquid thereby bringing about a more efficient treatment.

It is one of the principal objects of my invention to provide an improved method of treatment of continuous roving in a liquid treating medium in which the roving is fed continuously through the bath but is subjected to repeated changes of tension by which absorption and squeezing out of the liquid between the filaments is obtained.

A further object of my invention is to provide an improved apparatus for the continuous treatment of fibers such as artificial rayon roving having a large number of filaments in which means is provided for varying the tension of the filaments during their passage through the bath.

A further and more detailed object of the invention is to provide a simplified eccentric drive for one of a pair of rolls over which a textile roving is carried, such rolls being mounted in a liquid treatment tank with the distance between the rolls being repeatedly changed by the eccentric movement thereby causing the roving between the rolls to swell up under absorption of liquid when the path is shortest and then to discharge the liquid when the path is greatest.

Further objects and advantages of my invention will appear from the following description of preferred form of embodiment thereof taken in connection with the attached drawing illustrative thereof and in which:

Fig. 1 is a diagrammatic end elevation of a treating bath having horizontally positioned rolls,

Fig. 2 is a plan view of the eccentrically mounted roll with parts of the bearings shown in section, and

Fig. 3 is a diagrammatic end elevation of a modified form of apparatus.

In the preferred form of embodiment of my invention, a liquid treating bath, generally indicated at 10, is adapted to be used for continuously treating a high denier roving generally indicated at 12. More particularly, the roving is rayon having hundreds of separate filaments as for forming an untwisted staple of substantial size. It is to be understood, however, that the apparatus is useful for other fibers.

The multiple strand roving 12 is conducted on a continuous circuit through the bath by passing it over an upper roll or cage 14 and a lower roll or cage 15 which are preferably horizontal. The roving 12 after making the necessary or desired number of loops around the respective rolls 14 and 15 then discharges from the tank as shown at 12a. A tension is preferably maintained on the ends of the roving as by tension devices 19 which may be urged by springs or other means against the entering and exit roving 12 and 12a.

In order to increase the effectiveness of the liquid contact, I repeatedly change the tension on the roving within the tank to squeeze out the partially spent liquid. This may be effectively accomplished by an eccentric mounting of one of the rolls such as the upper roll 14 by using crank arms 16 having a bearing mounted portion 17. The crank arms are rotated by suitable drive means such as gear 18 and the lower roll which is mounted on a concentric axis 20 will be rotated by the top roll. The lower roll, however, is permitted to move towards and away from the eccentric roll in guide means 21 in order to prevent undue tension otherwise likely to break the roving. The upper roll rotates on an eccentric path as indicated by the dotted lines with the result that the length between the reaches 12b and 12c of the roving is changed. In addition, the reaches move laterally as shown by the dotted position of the roving within the bath. The illustration exaggerates this movement.

The movement of the roving from one dotted position to the other causes a form of washing action but primarily the reduction of tension allows the fibers to balloon out and absorb a

greater amount of the treating liquid than when the tension is increased. This repeated tensioning and loosening of the roving and lateral displacements occurs many times during the passage of the roving through the treating bath and thus sets up a liquid exchange between the respective filaments of the roving and the treating bath.

As shown in Fig. 2, the roll 14 is of a suitable length and construction as required by circumstances and each roll may be directly driven. The rolls 14 and 15 are preferably in askew relation with each other to make a helical transfer of the roving axially of the rolls through the treating liquid.

If desired, the lower roll 15a may be eccentrically mounted such as shown in Fig. 3 with the upper roll 14a on a central axis. The operation is substantially the same in this form.

The change of tension is not such as to permit slippage but both rolls are preferably operated at the same peripheral speed, so that there is little tendency of the roving to change its velocity although the tension may change.

It is to be understood that one or more series of rolls may be used in a common bath and that one or more baths having similar rolls may be used.

While I have shown a preferred form of embodiment of my invention, I am aware that other modifications may be made thereto and I therefore desire a broad interpretation of my invention within the scope and spirit of the description herein and of the claims appended hereinafter.

What I claim is:

1. An apparatus for continuously treating a roving having a plurality of filaments in a liquid bath which includes a pair of circular rolls in said bath over which said roving continuously passes and means to vary the tension of said roving and its path through the bath during its progress around said rolls whereby the absorption of the roving is periodically changed, said tension varying means including an eccentric crank mounting for one of the rolls and means for mounting the other roll for movement towards and away from one roll in response to its eccentric movement and tensioning of the roving.

2. The method of continuously treating a portion of a multiple filament high denier rayon roving which comprises substantially submerging the roving and repeatedly changing the tension of the submerged portion by simple harmonic motion, and laterally and longitudinally oscillating the roving during its passage through the bath with simple harmonic motion.

JOHN P. TARBOX.