Dec. 30, 1952 E. PEARSON 2,623,710

PACKAGE HOLDER FOR USE ON TEXTILE MACHINES

Filed June 20, 1951

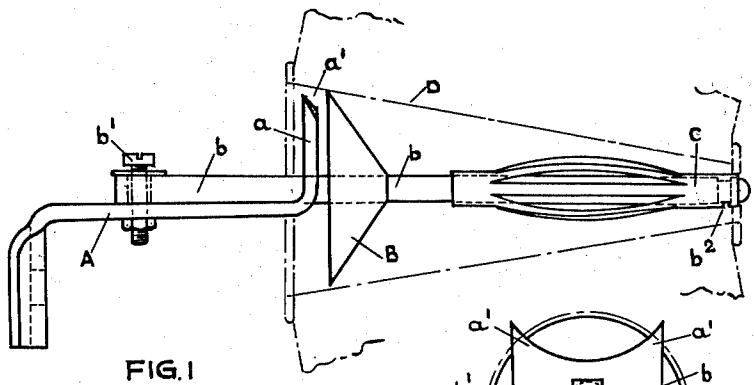

FIG. 1

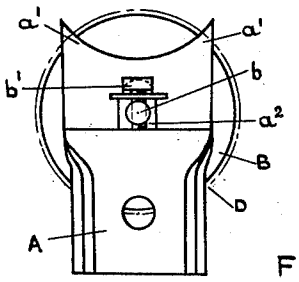

FIG. 2

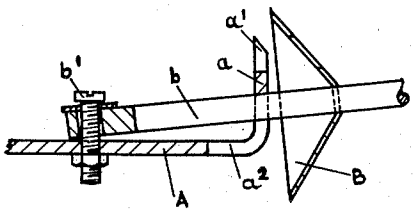

FIG. 3

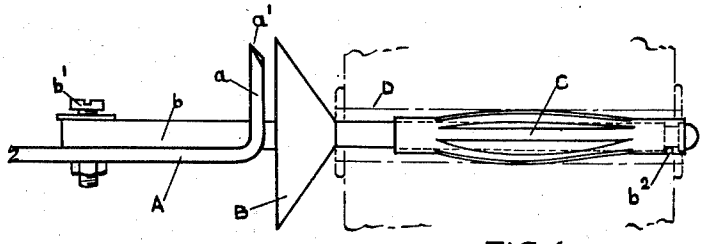

FIG. 4

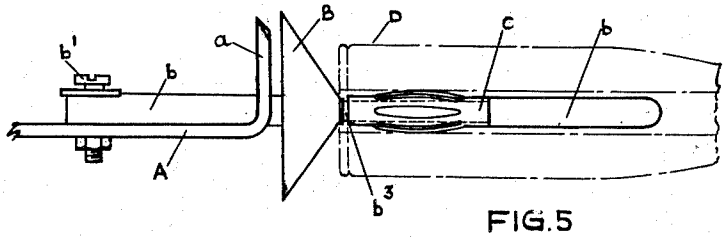

FIG. 5

INVENTOR
Edgar Pearson
By: Michael S. Striker

Patented Dec. 30, 1952 2,623,710

UNITED STATES PATENT OFFICE

2,623,710

PACKAGE HOLDER FOR USE ON TEXTILE MACHINES

Edgar Pearson, Colne, England, assignor of one-half to Electrical Products (Colne) Limited, Colne, England, a body corporate of Great Britain

Application June 20, 1951, Serial No. 232,531
In Great Britain June 26, 1950

6 Claims. (Cl. 242—130)

1

This invention relates to improvements in yarn package holders for use on textile machines and is particularly applicable for use on creels, pirn winding machines and similar machines.

Yarn packages which it may be required to use on the same machine may be parallel sided or may be of conical or tapering form and moreover may vary in internal diameter, and it is usually necessary to change the package holders to suit different shapes or sizes of packages.

The present invention has for its object a package holder which can be employed either for parallel sided or conical packages and which will also allow for variations in the internal diameter of the packages.

According to the invention the package holder comprises a substantially horizontal slotted bracket adapted to be secured to the frame of the creel or machine the free end of the bracket being bent upwards and formed with horns or tips, a substantially horizontal spindle mounted at one end on the bracket and extending forwardly through the slot therein, a plate, preferably of conical shape, affixed on the spindle outside but adjacent to the upturned end of the bracket and a balloon or other spring mounted on the spindle forwardly of the plate.

The invention is illustrated in and will be described with reference to the accompanying drawings, in which:

Fig. 1 is a side elevation of a package holder showing a conical package therein.

Fig. 2 is an end elevation of same.

Fig. 3 is a section of the end of the holder showing the spindle moved for the release of the conical package,

Fig. 4 is a side elevation showing the holder with a cheese thereon, and

Fig. 5 is a side elevation showing the holder with a bobbin or pirn thereon.

A plurality of brackets A are bolted to the frame of a creel, pirn winding machine or similar machine. Each bracket A is bent downwards at one end for attachment to the frame and extends horizontally or substantially horizontally therefrom. The free end a of the bracket is bent upwards at right angles, the upper edge of the upturned portion being radiused and provided with horns or tips a^1 at each end. A vertical slot a^2 is provided in the upturned portion extending into the horizontal portion through which projects a spindle b one end of which is pivoted on a bolt b^1 passing through the horizontal or substantially horizontal portion of the bracket A.

The end of the spindle extending outwards

2

from the bracket carries a locating means in the form of a plate B preferably of conical shape arranged adjacent the bracket A. The two horns or tips a^1 are spaced on opposite sides of the spindle axis to project beyond the periphery of plate B, whereby when the spindle is in the position shown in Fig. 1, the horns or tips a^1 are outside the periphery of the plate and engage the interior of a yarn package.

A package holding means in the form of a balloon or other spring C is mounted on the spindle b forwardly of the plate B to engage the nose of the package.

The spindle b may be provided with a recess b^3 to house the spring C and a groove b^2 to receive a split ring to retain the spring in position.

To mount a conical yarn package such as the package D shown in Fig. 1 on the holder, the spindle is raised into the position shown in Fig. 3 so that the horns or tips a^1 are inside the periphery of the plate B and the package is then placed over the spindles with its large end extending beyond the periphery of the plate and its nose engaging the spring C. The spindle is then released and the weight of the package will cause it to return to a horizontal position, Figs. 1 and 2 and the horns or tips will grip the inside of the package thereby preventing its removal or withdrawal during unwinding.

To mount a cheese pirn or other parallel sided package on to the spindle, it is merely pushed on to the spindle until its end reaches the bottom of the conical plate and it is held in position by the spring C as shown in Fig. 4 or Fig. 5.

What I claim is:

1. A yarn package holder for use on a textile machine, comprising, in combination, a bracket having an elongated portion adapted to be mounted on the machine and having a forward bent portion disposed substantially perpendicularly with respect to said elongated portion, said forward bent portion being formed with a cut-out and a pair of retaining horns; a spindle located on said bracket and extending forwardly of said bent portion through said cut-out thereof; means mounting said spindle on said bracket for rocking movement between an operating position extending substantially perpendicularly to said bent forward portion and a tipped position nearer to said horns than said operating position; package holding means mounted on said spindle; and a circular locating means mounted on said spindle between said holding means and said bent forward portion, located adjacent said bent forward portion, having its central axis substan-

tially coinciding with the axis of the spindle, and being of a radius which is less than the distance from the axis of the spindle to the extremities of the retaining horns when the spindle is in said operating position.

2. A yarn package holder for use on a textile machine, comprising, in combination, a bracket having an elongated portion adapted to be mounted on the machine and having a forward bent portion disposed substantially perpendicularly with respect to said elongated portion, said forward bent portion being formed with an elongated slot therein and being formed with a pair of retaining horns; a spindle located on said bracket, extending through said elongated slot and forwardly of said bent portion; means mounting said spindle on said bracket for rocking movement between an operating position extending substantially perpendicularly to said bent forward portion and a tipped position nearer to said horns than said operating position; package holding means mounted on said spindle; and a circular locating means mounted on said spindle between said holding means and said bent forward portion, located adjacent said bent forward portion, having its central axis substantially coinciding with the axis of the spindle, and being of a radius which is less than the distance from the axis of the spindle to the extremities of the retaining horns when the spindle is in said operating position.

3. A yarn package holder for use on a textile machine, comprising, in combination, a bracket having an elongated portion adapted to be mounted on the machine and having a forward bent portion disposed substantially perpendicularly with respect to said elongated portion, said forward bent portion being formed with a cut-out and with a pair of retaining horns; a spindle located on said bracket, extending forwardly of said bent portion and through said cut-out thereof; means mounting said spindle on said bracket for rocking movement between an operating position extending substantially perpendicularly to said bent forward portion and a tipped position nearer to said horns than said operating position; package holding means in the form of a spring cage mounted on said spindle; and a circular locating means mounted on said spindle between said holding means and said bent forward portion, located adjacent said bent forward portion, having its central axis substantially coinciding with the axis of the spindle, and being of a radius which is less than the distance from the axis of the spindle to the extremities of the retaining horns when the spindle is in said operating position.

4. A yarn package holder for use on a textile machine, comprising, in combination, a bracket having an elongated portion adapted to be mounted on the machine and having a forward bent portion disposed substantially perpendicularly with respect to said elongated portion, said forward bent portion being formed with a cut-out and with a pair of retaining horns; a spindle located on said bracket, extending forwardly of said bent portion and through said cut-out thereof; means mounting said spindle on said bracket for rocking movement between an operating position extending substantially perpendicularly to said bent forward portion and a tipped position nearer to said horns than said operating position; package holding means mounted on said spindle; and a conical plate mounted on said spindle between said holding means and said bent forward portion, located adjacent said bent forward portion, having its central axis substantially coinciding with the axis of the spindle, and being of a radius which is less than the distance from the axis of the spindle to the extremities of the retaining horns when the spindle is in said operating position.

5. A yarn package holder for use on a textile machine, comprising, in combination, a bracket having an elongated portion adapted to be mounted on the machine and having a forward bent portion disposed substantially perpendicularly with respect to said elongated portion, said forward bent portion being formed with an opening therein and formed with a pair of retaining horns; a pin mounted on said elongated portion; a spindle loosely connected to said elongated portion, extending through said opening and forwardly of said bent portion and being rockable between an operating position extending substantially perpendicularly to said bent forward portion and a tipped position nearer to said horns than said operating position; package holding means mounted on said spindle; and a circular locating means mounted on said spindle between said holding means and said bent forward portion, located adjacent said bent forward portion, having its central axis substantially coinciding with the axis of the spindle, and being of a radius which is less than the distance from the axis of the spindle to the extremities of the retaining horns when the spindle is in said operating position.

6. In a yarn package holder for use on a textile machine, in combination, a bracket having a substantially horizontal elongated portion adapted to be mounted on the machine and having a forward portion bent substantially vertically and upwardly therefrom and being formed with a cut-out and with a pair of upwardly projecting retaining horns; a spindle located on said bracket and extending forwardly through said cut-out thereof; means mounting said spindle on said bracket for rocking movement in a vertical plane extending forwardly of said upwardly bent portion between an operating position extending substantially perpendicularly to said bent forward portion and a tipped position nearer to said horns than said operating position; package holding means mounted on said spindle; and a conical plate mounted on said spindle between said holding means and said bent forward portion, located adjacent said bent forward portion, having its central axis substantially coinciding with the axis of the spindle, and being of a radius which is less than the distance from the axis of the spindle to the extremities of the retaining horns when the spindle is in said operating position.

EDGAR PEARSON.

REFERENCES CITED

The following references are of record in the file of this patent:

UNITED STATES PATENTS

Number	Name	Date
1,397,927	Fleck	Nov. 22, 1921
1,976,952	Longuall	Oct. 16, 1934
2,248,716	Markle	July 8, 1941
2,556,272	Hanse	June 12, 1951

FOREIGN PATENTS

Number	Country	Date
361,904	Great Britain	Nov. 27, 1931