April 18, 1967 D. E. RITCHIE 3,314,365

DIRECT ACTING VARIABLE PUMP

Filed Aug. 24, 1964 3 Sheets-Sheet 1

FIG. 1

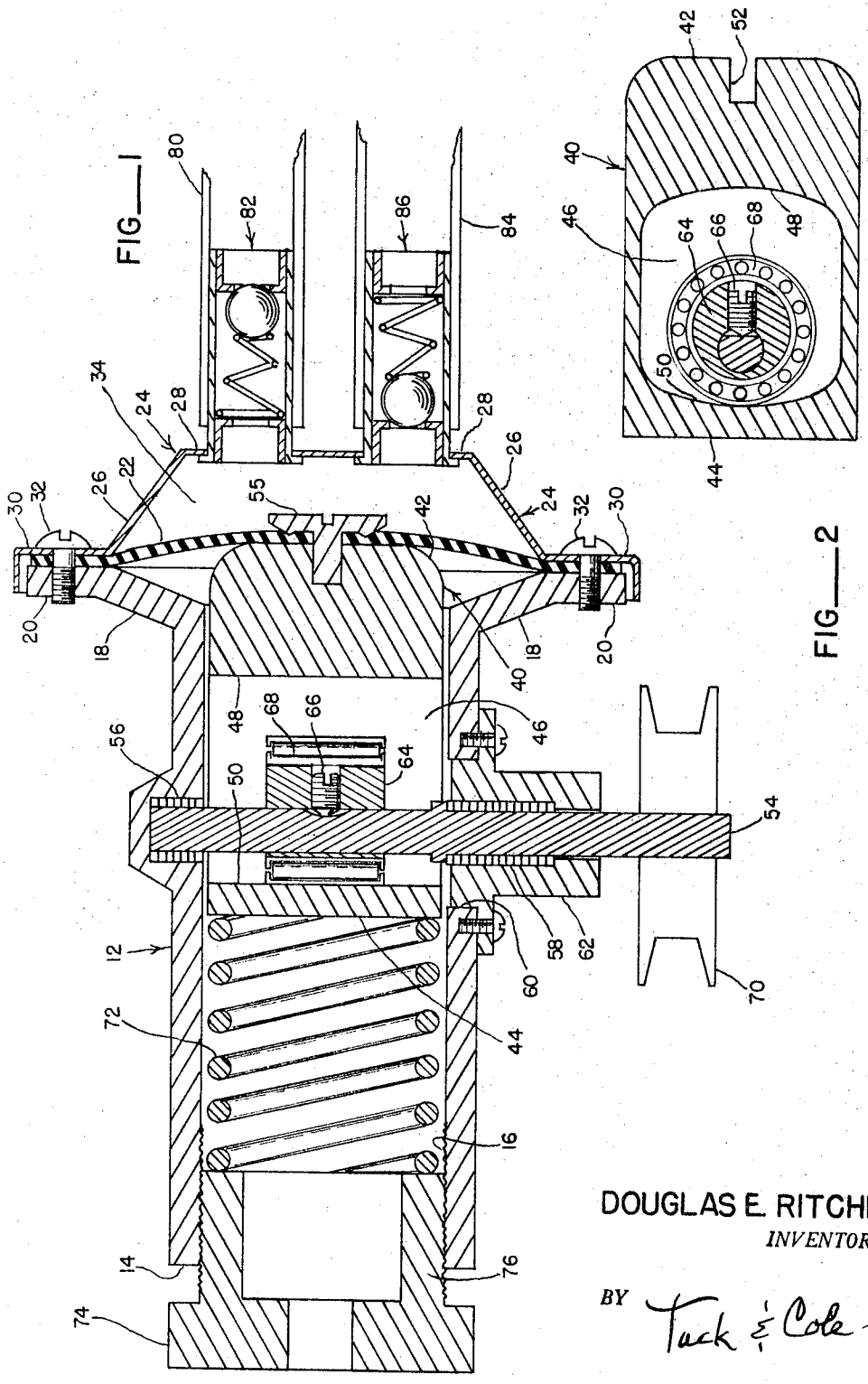

FIG. 2

DOUGLAS E. RITCHIE
INVENTOR.

BY Tack & Cole

April 18, 1967 D. E. RITCHIE 3,314,365

DIRECT ACTING VARIABLE PUMP

Filed Aug. 24, 1964 3 Sheets-Sheet 2

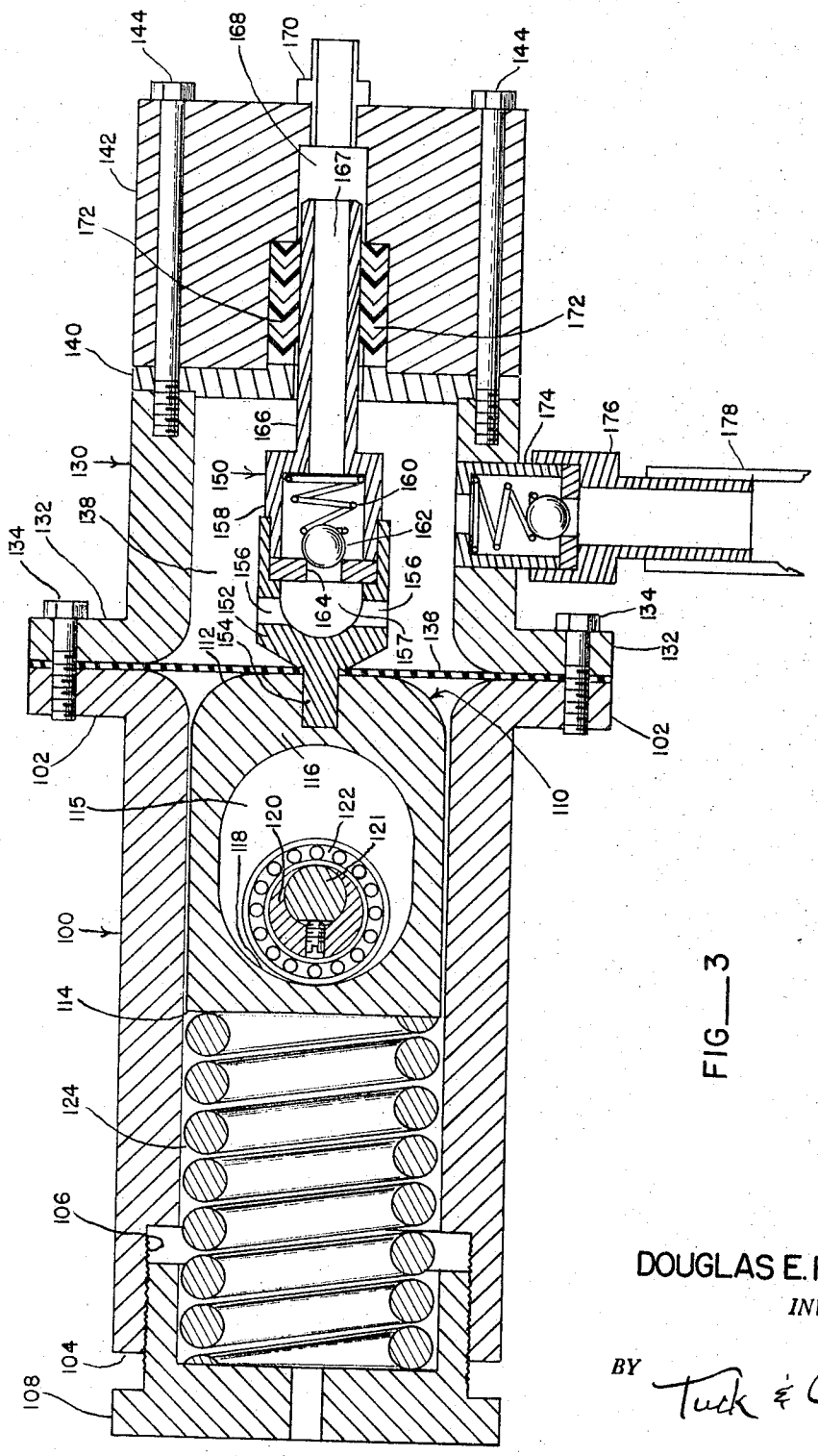

FIG. 3

DOUGLAS E. RITCHIE
INVENTOR.

BY Tuck & Cole

April 18, 1967 D. E. RITCHIE 3,314,365

DIRECT ACTING VARIABLE PUMP

Filed Aug. 24, 1964 3 Sheets-Sheet 3

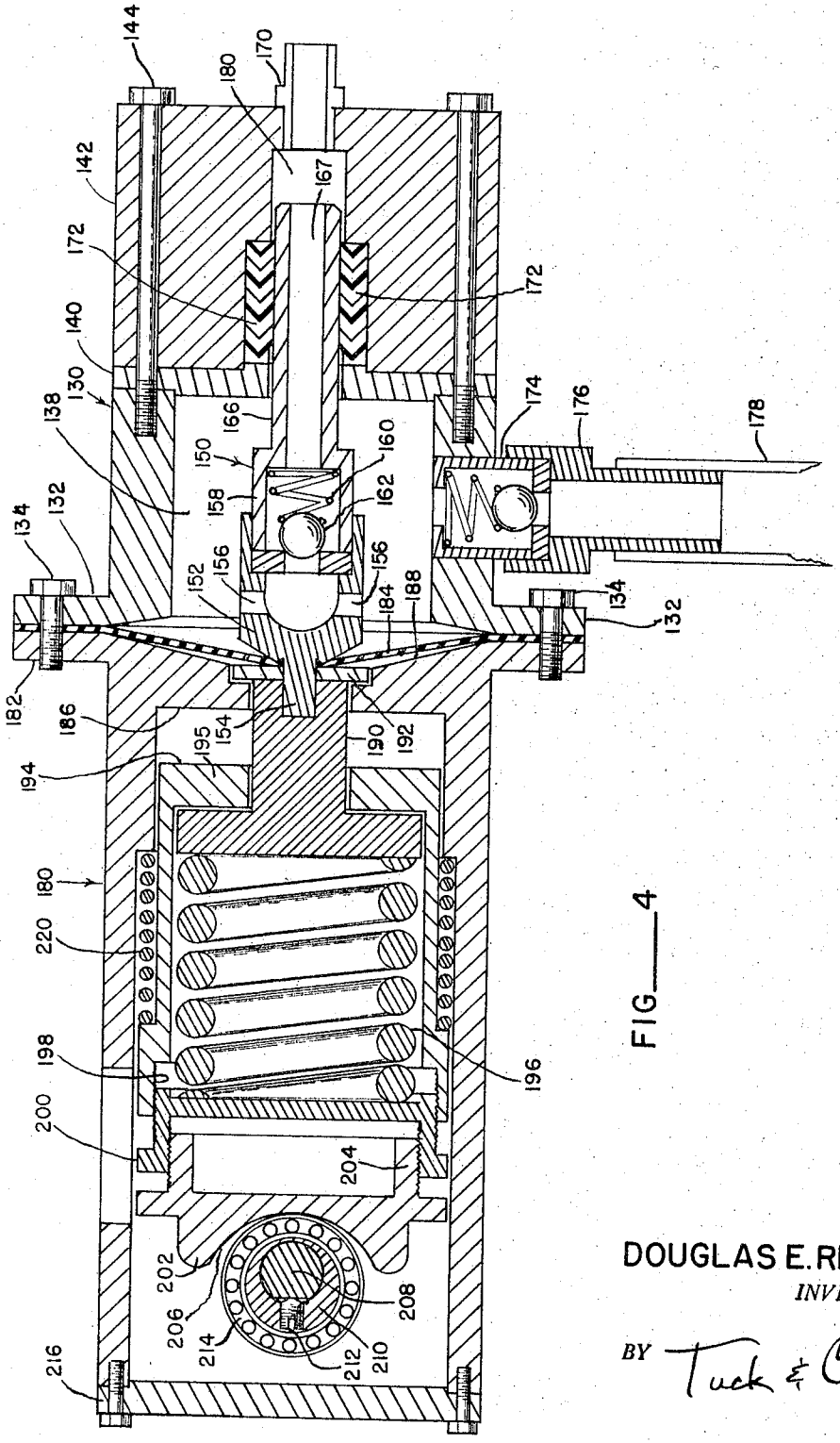

FIG. 4

DOUGLAS E. RITCHIE
INVENTOR.

BY Tuck & Cole

United States Patent Office 3,314,365
Patented Apr. 18, 1967

3,314,365

DIRECT ACTING VARIABLE PUMP

Douglas E. Ritchie, 8416 Woodhome Road, Tacoma, Wash. 98499

Filed Aug. 24, 1964, Ser. No. 391,404
8 Claims. (Cl. 103—38)

This invention relates to a new and novel concept in pumps which deliver material from a discharge source on demand at predetermined pressures. More particularly does this invention relate to a unique pump design and principle which enables the pump to deliver on demand at predetermined high pressures without danger of damage to the driving elements of the pump and in such a manner that auxiliary pressure-producing equipment is eliminated.

Homes and industry have numerous applications for pumps which deliver on demand and at predetermined pressures. Many pumps have been produced which will deliver high pressures and/or volumes at a continuous rate. The task of a fluid pump is to transmit material for a specific result. When that task has been completed, the pump must be shut off instantaneously or it will overpressure or overrun such task. Direct acting pumps are not designed to be stopped by back pressure from the outlet or discharge. If such stoppage or back pressure occurs, there is danger of excessive wear and stress on drive elements such as shafts, and the possible breakdown of the pumping chamber. Fluid pumps that cannot be regulated are virtually useless for intermittent application. Thus, the problem becomes in a large sense one of control. Numerous designs and devices have been investigated to give the operator some measure of control over the pumped material. Since no control variable is available in direct drive, as for instance in gas and electrically driven devices, it has been found necessary to control the drive or power input by employing an auxiliary control variable, the most common being pneumatic. Unfortunately, compressed air necessitates an expensive pressure-generating system consisting, among other items, of pumps, tanks, valves, regulators, and the like. Such auxiliary equipment is needed simply to deliver controllable variable power to a second pumping stage. Hence, heretofore known devices have been unable to deliver intermittently and on demand in a single pumping stage or unit.

Regardless of the nature of the drive, the drive side portion has also never been satisfactorily sealed or isolated from the delivery or material-handling side. Since the pressures necessary for delivering viscous materials such as paints are severe, there is the constant and ever-recurring problem of leakage from the pumping or material-handling side. For instance, in high-pressure type pumps, a cylinder or piston is most commonly used to drive the pumped material. Due to natural wear in reciprocating piston pumps, leakage around and along the piston becomes excessive and eventually arrives at the point where its flow is greater than the flow of material being pumped. In such a case, the leaking material in some instances flows into and contaminates the drive unit. Some pumps now on the market, because of uncontrollable leakage of lubricating oil and pumped material, are designeed with a catch cup or reservoir to isolate or drain off contaminated pumped material. If the contaminated material is not drained, it will overflow and thus contaminate the entire supply of material. It does not normally take much wear for pumped material to begin leaking around the drive piston past the seals or packing to the driving elemeents. The result, where hydraulic drive is used, is an inter-mixture of pumped material and hydraulic fluid around the drive elements. When the drive side is air-driven, the problem of course becomes one of gradual infiltration by the pumped fluid

into all of the elements of the drive mechanism, thereby cutting down efficiency and creating leaks at numerous locations.

The instant pump is designed specifically to overcome the disadvantages enumerated. The action and demand features of this pump are predicated on the reversal of the usual principles of reciprocal pumping. In short, the piston or follower is positively moved only on the rearward or infeed stroke by application of direct pressure and biased to return on the forward stroke by variable spring pressure applied to the follower. Inasmuch as this device will not pump positively on the forward stroke, and because said forward stroke pressure is adjustable and therefore variable, the forward stroke is accomplished at a predetermined pressure. If forward movement of the follower piston is met and repelled by material pressure balancing the drive spring pressure, forward pumping action will cease. Such balancing pressure of course is the result of closing the outlet or discharge. In this way, the forward or pumping stroke can be arrested at any point over the entire range of follower movement. The follower piston will be urged rearwardly by power but restrained from forward movement by the accumulated balancing material pressure. Eliminating the positive drive pumping stroke protects outlet lines and drive elements from the dangers of overloading. In this way, the operator is able to control delivery simply by opening and closing the discharge outlet or nozzle.

In effect, this pumping mechanism has two sections comprising a pumping side and a driving side. In-feed and discharge are accomplished through check valves on the pumping side while a diaphragm or flexible membrane separates the two sections. The drive side of the pump has a follower element which is connected through the flexible membrane to the other delivery elements. The follower mechanism has behind it a spring having a range of predetermined compressive strength in association with an adjustable element, usually threaded, allowing pressure to be varied by adjusting the spring compressive force. The follower element may be likened to a piston in that it moves reciprocally within the drive housing section. The compression spring moves the follower in the forward or pumping direction. A shaft-driven cam drives the follower in the rearward or in-feed stroke. Direct pressure from the cam is used only to compress the spring. Between the driving and pumping sections is inserted the flexible membrane or diaphragm which effects a leak-proof and lasting seal. In a low pressure application of this invention, the diaphragm can be a pressure-bearing element. In high-pressure variations of this invention, the diaphragm cannot be a pressure-bearing element since maximum stresses resulting from pressure are above the burst pressure of known diaphragm material. The design of the pumping elements in the high pressure applications of this pump eliminate leakage of pumped material beyond or outside the pumping portion. With material inlet and outlet valves so placed in the design, passage of material is confined to inlet and pumping chambers. All gradual leakage which will eventually occur due to natural wear of packing in the pumping portion will return around the pumping elements and merely reenter the inlet or vacuum chamber to be recycled or repumped through said pumping elements. It will be appreciated that as packing deteriorates, pressure will begin to drop, reflecting the condition of the packing. More importantly, however, the pumped material will not leak into or infiltrate components and parts on the driving side of the pump, thereby to impair functioning of the pump.

Accordingly, it is a prime feature of this invention to provide a pump which effectively isolates the pumping side of the apparatus from the driving side.

Another feature of this invention is to supply a pump which eliminates auxiliary hydraulic and pneumatic pressure-generating equipment and related regulating systems.

Still another feature of this invention is to furnish a pump which is simple in design, rugged in construction, and economical to produce, as well as being dependable, compact, and readily portable.

Yet another feature of this invention is to provide a pump which can be driven from many types of commonly available power sources, such as motors, both electric and gas-driven, power take-offs, and the like found around homes, shops, and plants.

A further feature of this invention is to provide a pump which eliminates the aggravating problems of leakage and contamination of pumped fluid.

A still further feature of this invention is to supply a self-regulating pump which delivers upon demand by the opening and closing of a discharge or outlet nozzle without danger of damage to the components of the drive side of the pump.

An even further feature of this invention is to provide a pump which allows the pressure to be varied and adjusted according to the desires and needs of the operator.

Other objects, advantages, and features will become subsequently apparent in the details of construction and operation as will be more fully hereinafter described and claimed. Reference will be had to the accompanying drawings, forming a part hereof, wherein like numerals will refer to like parts throughout, and in which:

FIGURE 1 is a low pressure embodiment of this invention in cross section, showing the diaphragm as a pressure-bearing element;

FIGURE 2 is a partial cross section view in elevation through the midline of the follower element and its cam-driving feature shown in FIGURE 1;

FIGURE 3 is an elevational cross section view of another embodiment of this invention which is designed to operate at high pressures, and in which the diaphragm is not a pressure-bearing element; and

FIGURE 4 is an elevational cross section view of another embodiment of this invention in which the pumping side is essentially the same as in FIGURE 3, but in which the drive side of the pump utilizes a spring-loaded ram forwardly driven by the cam.

Referring now to the embodiment of FIGURE 1, it will be seen that the pump is comprised of a two-part housing. The drive or main housing **12** is generally cylindrical and somewhat elongated, having open rear end **14** and inner threaded surface **16**. It will be noted that the wall of housing **12** is of substantial thickness to safely enclose the pump-driving elements. The forward end of housing **12** is provided with a belled or flaring annular flange portion **18** which in turn has a peripheral bolt-receiving section **20**. A flexible but non-resilient type diaphragm **22** is secured to the peripheral portion **20** of flange **18** by a forward pump section housing generally designated by the number **24**. Forward pump section has a frusto-conical portion **26** beginning at about the point of juncture of flange **18** and its peripheral portion on the housing. Said frusto-conical section narrows forwardly and inwardly and has thereon the inside annular flange **28**. The outer edge of forward housing **24** also has a peripheral portion **30** which coincides generally in diameter and area with the peripheral portion **20** of the main housing. As can be seen, the forward and rear housing are attached together at their peripheries by bolts or other conventional means **32** in such a way that the diaphragm **22** is secured therebetween to form a fluid-tight seal. Diaphragm **22** is preferably made of non-resilient, non-stretchable type plastic or synthetic rubber of relatively heavy thickness. The diaphragm should be so formed that enough slack or flexibility is provided to allow it to flex within the chamber **34** defined between housings **12** and **24**.

In FIGURES 1 and 2, the primary drive element is a round, piston-like follower means, generally designated by the number **40**. Follower **40** has a diaphragm end surface **42** and rear or spring-engaging surface **44**. Follower means **40** is positioned in such a manner that normally diaphragm end **42** extends to some extent into chamber **34** defined between the two housings. As viewed in FIGURE 2, it will be seen that the interior portion of follower means **40** is hollowed out to form cavity **46**. Follower cavity **46** will have a non-contact or generally forward surface **48** and a rear or contact surface **50**. The cavity is formed with a non-contact forward surface to insure that no positive drive stroke is created. Diaphragm end **42** of follower means **40** is provided with a threaded hole **52** for receiving diaphragm securing bolt **55** which in turn is inserted from the pumping side through the center of the diaphragm to secure diaphragm **22** to surface **42**. Extending across the barrel or interior of main housing **12** on a generally horizontal plane is the drive shaft **54** properly journaled within the housing on each side by virtue of bearing surfaces **56** and **58**. It will be noted that an appropriate opening is provided in one side of housing **12** to receive the adapter fitting **62** which is secured to the housing, and in which bearings **58** are mounted so that proper assemblage of the unit can be achieved. Shaft **54** is so located that it passes through cavity **46** of the follower. Within the follower cavity **46** is an eccentric or cam lobe **64** mounted by conventional means, as for instance a lock-screw, on the shaft **54**. The periphery of cam **64** may be provided with roller bearing structure **68** so as to minimize wear. Cam **64** is arranged with respect to the follower and shaft so that in its position shown in FIGURES 1 and 2, the diaphragm is forward and the low side of the lobe bears on surface **50**. As the shaft rotates by appropriate drive by motor means through pulley or sprocket **70**, the high side of cam lobe **64** swings around so that follower **40** is retracted a predetermined distance into the barrel of housing **12**. Thus, there is provided positive mechanical movement of the follower means in a rear direction. Disposed behind rear surface **44** of follower **40** is the substantial compression spring **72**, the precise properties of which are governed by the pressures which the pump as a whole is designed to produce. Spring **72** is confined back of follower **40** and inside the rear end **14** of the housing by an adjusting knob **74**. Adjusting knob **74** has cylindrical threaded wall portions **76** to engage the interior threads **16** of the housing. Thus, compression and hence delivery force of the spring may be regulated to desired predetermined values. Resilient return is provided for the follower so that in the forward or pumping stroke no positive mechanical drives are involved, such as in the positive rear or in-feed stroke.

Pumping action is provided in this unit by the reciprocal or back-and-forth flexing of diaphragm **22**. Input is achieved by use of conventional one-way check valve devices as those skilled in the art will clearly recognize. An input connection is provided line or hose **80** which directs material into chamber **34** from a supply source through the check valve assembly generally designated by the number **82**. The positive rearward infeed stroke of follower **40** opens the spring-loaded ball in check valve **82** so that material is brought into chamber **34**. As cam **64** rotates another 180°, spring **72** forces follower **40** forwardly, driving the material through discharge connection **84** by way of check valve **86**. In this particular embodiment, diaphragm **22** is, as stated above, a pressure-bearing element and is responsible for pressure delivered through discharge line **84** and check valve assembly **86**. Thus, because the diaphragm does act as a pressure-bearing element as well as a seal, this embodiment would necessarily be confined generally to low pressure pumping. It will be appreciated that due to complete sealing between the material-handling or pumping side and the

drive side that no leakage occurs from one side to the other.

The embodiment shown in FIGURE 3 involves the same principles as the embodiment in FIGURES 1 and 2, except that certain modifications have been made in the pumping portion of the device to handle high pressures. This pump has housing **100** for the drive elements, attachment flange **102**, rear end **104**, and rear end interior threads **106** for receiving adjusting knob **108**. A follower means or piston **110** has diaphragm end **112**, rear or spring end **114**, and internally thereof in cavity **115** the forward or non-contact surface **116** and the rear or contact surface **118**. Shaft **121** is mounted on bearings supported in the walls of housing **100** and extends through cavity **115** generally horizontally. Cam lobe **120** is mounted on shaft **121** and has the peripheral bearing element **122**. Compression spring **124** provides energy for returning follower **110** to its forward position. Since this embodiment is intended to deliver higher pressures than the previous embodiment, it is necessary that the pumping portion of the apparatus also be provided with substantial structure. Accordingly, pump portion or housing **130** is generally of the same diameter and thickness as drive housing **100**. Pump housing **130** is considerably shorter, however, and is provided with flange **132** for attachment to flange **102** to join the two housings by the use of bolts **134**. A diaphragm **136** is interposed between the pump housing and the drive housing. The relatively short housing **130** defines a vacuum chamber **138** interiorly thereof bounded on the rear by diaphragm seal **136** and at the forward end by a closure member **140**. A packing head **142** is bolted to forward housing **130** by virtue of elongated bolts or studs **144**. Closure member **140** and sealing or packing heads **142** are formed with openings through the central portions thereof, in order to accommodate a pressure piston element generally designated by the number **150**.

A connector and inlet unit **152** forming part of pressure element **150** is attached by threaded stud **154** through diaphragm **136** to end **112** of follower **110**. Unit **152** has ports **156** towards the rear end thereof which open into a central cavity **157** inside unit **152**. A one-way check valve assembly housing **158** contains a commonly known compression spring **160** and closure ball **162** which communicate with chamber **157**. Check valve housing **158** also has inlet opening **164** opened and closed by ball **162**. Extending forwardly and centrally, from check valve housing **158**, is an elongated tube **166** having central passageway **167**. Check valve housing **158** is received in the unit **152** where is is rigidly held or secured as by threads or the like. Check valve tube **166** extends through an opening in the closure member **140** into a cavity **168** in the packing head. The cavity **168** extends generally through the entire length of the packing head, and terminates near the rear end thereof to receive a pressure hose or line fitting **170**. Cavity **168** is generally of the same diameter as tube **166**. A significant potrion of the packing head around cavity **168** is provided with well-known type chevron packing or other type seals **172** for a purpose which will be explained hereinafter.

An inlet opening check valve **174** is installed in the wall of the forward pump portion **130**. An adapter or fitting **176** connects to the check valve and receives line or hose **178** leading from the manifold or source of material to the pump. The nature and design of the check valves are not limited except by their ability to function in this environment. It will be seen that direct mechanical tying of pressure element **150** is made with the follower **110**. Connection is made through a hole in the diaphragm seal so that element **150** can be secured to the follower. As follower **110**, and the entire assembly of elements **152**, **158**, and **150** are driven to the rear by cam **120**, vacuum is created within chambers **138** and **168** so that material is drawn in through infeed line **178**, through the check valve **174**, and into chamber **138**. At the same time as follower element **110** moves rearwardly, pressure element **150** also moves rearwardly. Material then enters pressure element **150** through input ports **156**, cavity **157**, and into the check valve, tube **166**, and chamber **168**. Follower means **110** is urged forward by spring **127**, the check valve in housing **158** closes, as does infeed check valve **174**, to completely close the pumping side. Follower **110** transfers forward movement to pressure element **150**, creating pressure within barrel **167** of tube **166** and within the chamber **168** to deliver material from outlet connection **170**. In this way, direct pressure on the diaphragm **136** is avoided.

It will be appreciated that a certain amount of flexing takes place in the diaphragm. Sealing means **172** in the packing head prevents material from feeding back into the main chamber **138** around tube **166**. It will be appreciated that pressures in chamber **138** are significantly lower than those within tube barrel **167**, check valve **158**, and packing head chamber **168**. Some pressure will be generated in main chamber **138**, but flexibility of the diaphragm restricts the pressure from building beyond a confinable point. Since drive shaft **122** in main housing **100** is rotated at conventional motor speeds, reciprocation of follower **110** with the nozzle open is extremely rapid. Therefore, while the pressure element **150** does not handle large quantities of material in any one stroke, nevertheless it does generate positive pressures in accordance with the demand of the discharge element attached to the outlet connection **170** and in sufficient quantity. Nature of the packing head **142** is such that it can be removed very quickly from the pump and new seals **172** put in as the old seals begin to wear and permit leakage therearound from chamber **168** back into the main chamber **138**.

The embodiment of FIGURE 4 illustrates an alternative drive structure. The forward or pumping section is essentially the same, if not identical to forward or pumping portion **130** of the embodiment shown in FIGURE 3, and hence same numbers designating the elements have been applied. The altered drive structure of the embodiment of FIGURE 4 has a cylindrical rear housing generally designated by the number **180**. Housing **180** has attachment flange **182** for securement to forward flange **132** by bolts or studs **134**. Diaphragm seal **184** is interposed between forward housing **130** and the drive housing **180**. The front end of housing **180** is substantially closed by forward wall **186** which is generally formed radially inwardly at right angles to the main housing. The forward surface **188** angles inwardly and rearwardly. The threaded stud **154** is attached to drive means **190** which is in the form of a T-shaped element, the central or longitudinal portion of which attaches to threaded stud **154**. An opening is provided in wall **186** to allow for aligned reciprocal movement of drive means **190**. A retaining ring or washer **192** is placed on the threaded stud **154** on the rear side of the diaphragm between element **152** and drive means **190**. Retaining ring **192** prevents drive means **190** from slipping free or disengaging from the opening in wall **186**. Thus its rearward movement is controlled. A cylindrical spring housing **194** is placed within the confiines of housing **180** and contains the main compression or drive spring **196**. The head portion of drive means **190** is inside the spring housing while an opening in the forward wall **195** of said spring housing allows the central portion to extend forwardly to the rear side of member **190**. The head of drive means **190** abuts the rear or interior surface of forward wall **195** and as can be seen, the central portion is received for slidable reciprocal movement in the opening. The rear end of spring housing **194** is open and threaded on its inside as at **198** to receive the closure adjustment cap **200**. Cap **200** in this instance serves as the pressure adjustment feature for the main compression

spring 196. Elements 200 and 202 make up a length compensating feature so that as cap 200 is tightened to compress spring 196, the counter-threaded follower member 202 is threaded rearwardly to insure that the same length in the drive parts is maintained. Thus, in contrast to the embodiment of FIGURE 3, spring 196 is not compressed in either direction, either during the pumping stroke or the rearward or infeed stroke. Compression of said spring takes place only when back pressure of pumped material overcomes pressure of spring 196. Then, of course, the driven member 190 is held against forward movement. The cam moves spring housing 194 forwardly compressing spring 196. Follower element 202 is formed with the contact or follower surface 206. Shaft 208 has cam lobe 210 with appropriate lock screw 212, and peripheral bearing structure 214. Thus, positive drive of the whole assembly is obtained from the rear rather than from its front. The open rear end of main housing 180 is closed with a cover element 216 in conventional manner.

A return spring 220 is disposed between the spring housing 194 and the main housing 180 and provides the force for the rearward or infeed stroke drawing material into pumping chamber 138. The inside wall of main housing 180 is offset outwardly and the rear portion of the spring housing is also offset outwardly to define a spring cavity for auxiliary spring 220. This arrangement results in a spring-loaded rearward or infeed stroke and a positive forward stroke buffered by spring 196 and member 190 in case discharge is stopped to create a pressure balance. The shaft and cam 210, together with follower 202 compress both springs. In the event that the nozzle or discharge control element attached to the pumping outlet 170 is open, the assembly of elements 190, 195, 200, and 202 will move forward with the positive drive stroke of the follower.

It will be appreciated by those skilled in the art that a positive material infeed could be incorporated with the various embodiments, thus eliminating the negative or vacuum type infeed action shown.

The foregoing is considered as illustrative only of the principles of this invention. Numerous modifications will occur to those skilled in the art and hence it is not desired to limit the invention to the exact construction and operation shown and described. Accordingly, all suitable equivalents may be resorted to which fall within the scope of the invention.

What is claimed is:

1. A demand controlled, variable pressure pump, comprising: (a) a tubular drive housing having a front end and a rear end; (b) a reciprocally movable piston follower means of uniform transverse dimension and slidably engaging the inner surface of said housing and located generally at said front end, said follower means including a cavity opening therethrough having a cam follower surface; (c) a drive shaft means mounted in said housing and extending through said cavity, said shaft having a cam lobe means thereon engaging said cam follower surface for moving said follower means rearwardly as said shaft rotates; (d) a compressible pressure spring located to the rear of and bearing on said follower means to urge said cam follower surface against said cam lobe means, said drive housing having spring pressure adjustment means received on the rear end thereof confining said pressure spring; (e) a material pumping housing detachably received on the front end of said drive housing and including a non-resilient, flexible, non-porous diaphragm received between said housings for sealingly isolating one housing from the other, said diaphragm being attached to the forward end of said follower means for reciprocation therewith, and said pumping housing having check valve operated inlet and outlet means for pumped material.

2. A demand controlled, variable pressure pump, comprising: (a) a tubular drive housing having a front end and a rear end; (b) a reciprocally movable piston follower means of uniform transverse dimension and slidably engaging the inner surface of said housing and located generally at said front end, said follower means including a cavity opening extending therethrough, said cavity having a cam follower surface; (c) a drive shaft means mounted in said housing and extending through said cavity, said shaft having a cam lobe means thereon engaging said cam follower surface for moving said follower means rearwardly as said shaft rotates; (d) a compressible pressure spring located so as to bear on said follower means to urge said cam follower surface against said cam lobe means, said drive housing having spring pressure adjustment means received thereon confining said pressure spring between said piston follower and said adjustment means; (e) a material pumping housing detachably received on the front end of said drive housing and including a non-resilient, flexible, non-porous diaphragm received between said housing for sealingly isolating one housing from the other, said diaphragm being attached to the forward end of said follower means for reciprocation therewith, and said pumping housing having one-way check valve operated inlet and outlet means for pumped material.

3. A demand controlled, variable pressure pump, comprising: (a) a tubular drive housing having a front end and a rear end; (b) a reciprocally movable piston follower means within said housing and located generally at said front end, said follower means having a cam follower surface; (c) a drive shaft means rotatably received and mounted in said housing, said shaft having a cam lobe means thereon engaging said cam follower surface for positively moving said follower means rearwardly as said shaft rotates; (d) a compressible pressure spring located to the rear of and bearing on said follower means to urge said cam follower surface against said cam lobe means, said drive housing having spring pressure adjustment means received on the rear end thereof confining said pressure spring; (e) a pump housing having front and rear ends and being detachably received on the front end of said drive housing and including an inlet valve and a flexible, non-porous diaphragm seal received between said housings for sealingly isolating one housing from the other, the inside of said pump housing defining a vacuum chamber enclosed at its rear end by said seal and on its front end by closure head means; and (f) a discharge pressure element within said pump housing connected for reciprocal movement through said seal to said follower means and including inlet ports and an elongated outlet valve housing extending into a pressure outlet cavity in said closure head for generating pressure on pumped material as said follower and pressure element move.

4. A demand controlled, variable pressure pump, comprising: (a) a tubular drive housing having a front end and a rear end; (b) a reciprocally movable piston follower means within said housing and located generally at said front end, said follower means including a cavity opening therethrough having a cam follower surface; (c) a drive shaft means mounted in said housing and extending through said cavity, said shaft having a cam lobe means thereon engaging said cam follower surface for positively moving said follower means rearwardly as said shaft rotates; (d) a compressible pressure spring located to the rear of and bearing on said follower means to urge said cam follower surface against said cam lobe means, said drive housing having spring pressure adjustment means received on the rear end thereof confining said pressure spring; (e) a pump housing having front and rear ends and being detachably received on the front end of said drive housing and including an inlet valve and a flexible, non-porous diaphragm seal received between said housings for sealingly isolating one housing from the other, the inside of said pump housing defining a vacuum chamber enclosed at its rear end by said seal and on its front end by closure head means; (f) a discharge pressure ele-

ment within said pump housing connected for reciprocal movement through said seal to said follower means and including inlet ports and an elongated outlet valve housing extending into a pressure outlet cavity in said closure head for generating pressure on pumped material as said follower and pressure element move.

5. A demand controlled, variable pressure pump, comprising: (a) a tubular drive housing having a front end and a rear end; (b) a reciprocally movable piston follower means within said housing and located generally at said front end, said follower means including a cavity opening extending therethrough, said cavity having a cam follower surface; (c) a drive shaft means mounted in said housing and extending through said cavity, said shaft having a cam lobe means thereon engaging said cam follower surface for positively moving said follower means rearwardly as said shaft rotates; (d) a compressible pressure spring located so as to bear on said follower means to urge said cam follower surface against said cam lobe means, said drive housing having spring pressure adjustment means received thereon confining said pressure spring between said piston follower and said adjustment means; (e) a pump housing having front and rear ends and being detachably received on the front end of said drive housing and including an inlet valve and a flexible, non-porous diaphragm seal received between said housings for sealingly isolating one housing from the other, the inside of said pump housing defining a vacuum chamber enclosed at its rear end by said seal and on its front end by closure head means; and (f) a discharge pressure element within said pump housing connected for reciprocal movement through said seal to said follower means and including inlet ports and an elongated outlet valve housing extending into a pressure outlet cavity in said closure head for generating pressure on pumped material as said follower and pressure element move.

6. A demand controlled, variable pressure pump, comprising: (a) a generally tubular drive housing having front and rear ends; (b) reciprocally movable follower means within said housing and located generally toward said front end, said follower means having a drive engaging means thereon; (c) a drive means extending through and received in said housing, said drive means having a follower engaging means thereon engaging said drive engaging means for moving said follower means; (d) a compressible pressure spring means located within said housing and bearing on said follower means to urge said drive engaging means against said follower engaging means, said drive housing having spring pressure adjustment means thereon; (e) a pump housing having front and rear ends and being detachably received on the front end of said drive housing and including an inlet valve and a flexible, non-porous diaphragm seal received between said housings for sealingly isolating one housing from the other, the inside of said pump housing defining a vacuum chamber enclosed at its rear end by said seal and on its front end by closure head means; and (f) a discharge pressure element within said pump housing connected for reciprocable movement through said seal to said follower means and including inlet ports and an elongated outlet valve housing extending into a pressure outlet cavity in said closure head for generating pressure on pumped material as said follower and pressure element move.

7. A demand controlled, variable pressure pump, comprising: (a) a generally tubular drive housing having front and rear ends; (b) a reciprocally movable, generally tubular piston follower means within said housing and located generally toward said front end, said follower means having a drive engaging means thereon; (c) a drive means extending through and received in said housing, said drive means having a follower engaging means thereon engaging said drive engaging means for moving said follower means; (d) a first compressible pressure spring means located within said drive housing outside said follower means and bearing on said follower means to urge said drive engaging means against said follower engaging means, said follower means having spring pressure adjustment means thereon, a second compressible pressure spring therein and a connector drive means on the front end thereof for relative movement with said follower means; (e) a pump housing having front and rear ends and being detachably received on the front end of said drive housing and including an inlet valve and a flexible, non-porous diaphragm seal received between said housings for sealingly isolating one housing from the other, the inside of said pump housing defining a vacuum chamber enclosed at its rear end by said seal and on its front end by closure head means; and (f) a discharge pressure element within said pump housing connected for reciprocal movement through said seal to said connector drive means in said follower means and including inlet ports and an elongated outlet valve housing extending into a pressure outlet cavity in said closure head for generating pressure on pumped material as said follower and pressure element move, said outlet valve housing being sealed by said closure head.

8. A demand controlled, variable pressure pump, comprising: (a) a generally tubular drive housing having front and rear ends; (b) a reciprocally movable generally tubular follower means within said housing and located generally toward said front end of said drive housing, said follower means having a drive engaging means on the rear portion thereof; (c) a drive means extending through and received in said housing, said drive means having a follower engaging means thereon engaging said drive engaging means for moving said follower means; (d) a first compressible pressure spring means located within said housing outside said follower means and bearing on said follower means to urge said drive engaging means rearwardly against said follower engaging means, said follower means having spring pressure adjustment means thereon, a second compressible pressure spring therein and a piston connector drive means slidably received within said follower means and extending out of the forward end of said follower means; (e) a pump housing having front and rear ends detachably received on the front end of said drive housing and including an inlet valve and a flexible, non-porous diaphragm seal received between said housings for sealingly isolating one housing from the other, the inside of said pump housing defining a vacuum chamber enclosed at its rear end by said seal and on its front end by closure head means; and (f) a discharge pressure element within said pump housing connected for reciprocal movement through said seal to said piston connector drive means in said follower means and including for movement therewith inlet ports and a generally tubular elongated outlet valve housing extending into a pressure outlet cavity in said closure head for generating pressure on pumped material as said follower and pressure element move.

References Cited by the Examiner

UNITED STATES PATENTS

1,597,689	8/1926	Moulet	103—37
2,040,667	5/1936	Moulet	103—38
3,120,817	2/1964	Price	103—150

FOREIGN PATENTS

587,838	1/1925	France.
1,005,688	12/1951	France.

LAURENCE V. EFNER, *Primary Examiner.*