Nov. 3, 1942. F. E. SINCLAIR 2,300,980

PULLER FOR BROACHING STEELS

Filed Aug. 18, 1941 3 Sheets-Sheet 1

Fig. 1.

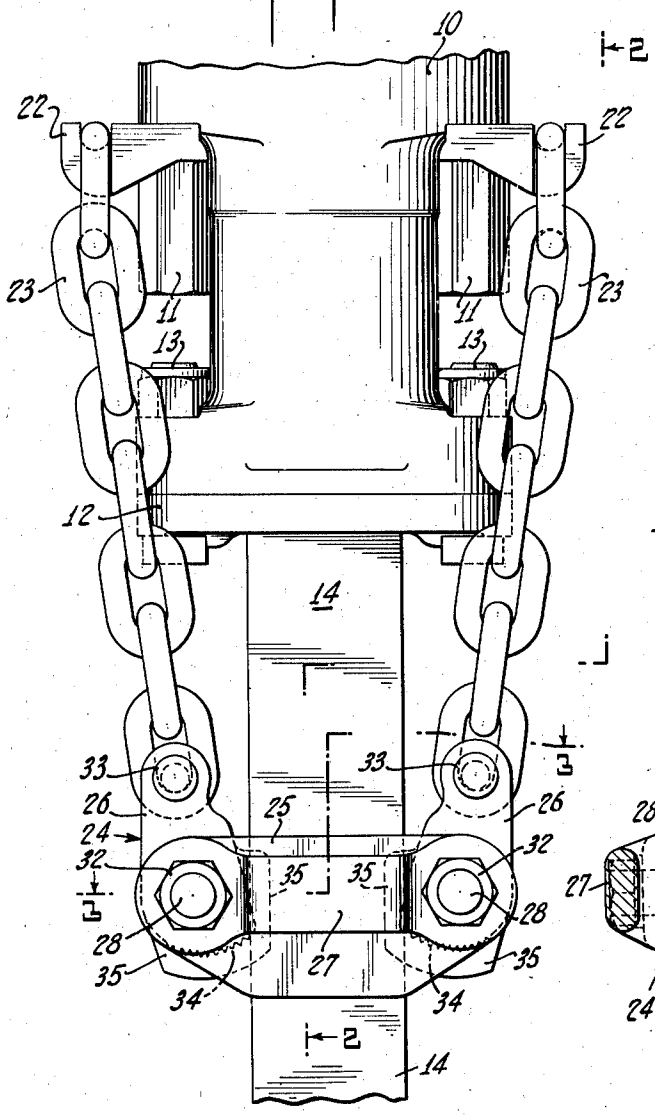

Fig. 2.

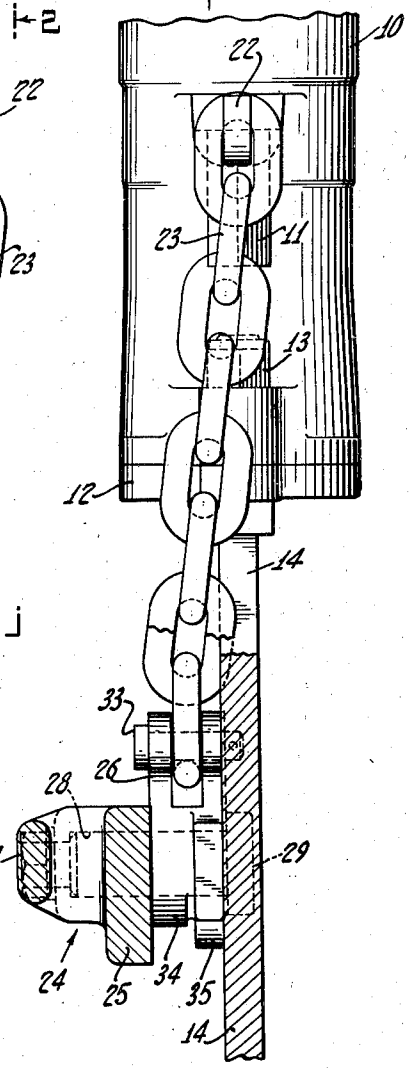

Fig. 3.

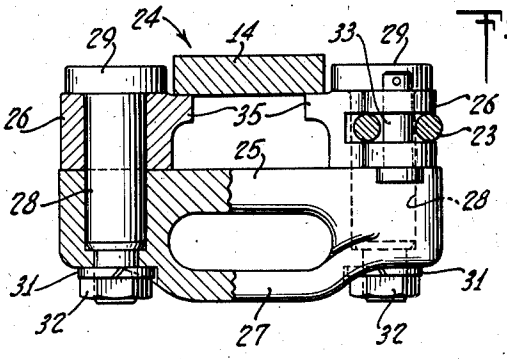

INVENTOR
FRANK E. SINCLAIR
BY
Raymond G. Mullee
ATTORNEY

Nov. 3, 1942. F. E. SINCLAIR 2,300,980

PULLER FOR BROACHING STEELS

Filed Aug. 18, 1941 3 Sheets-Sheet 2

Fig. 4.

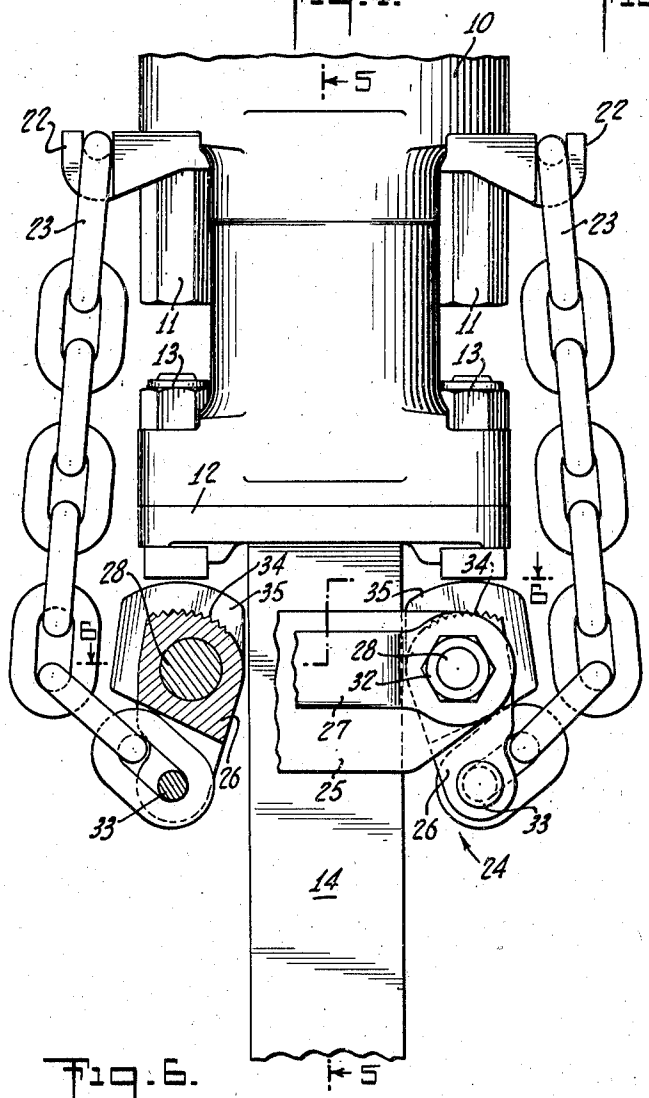

Fig. 5.

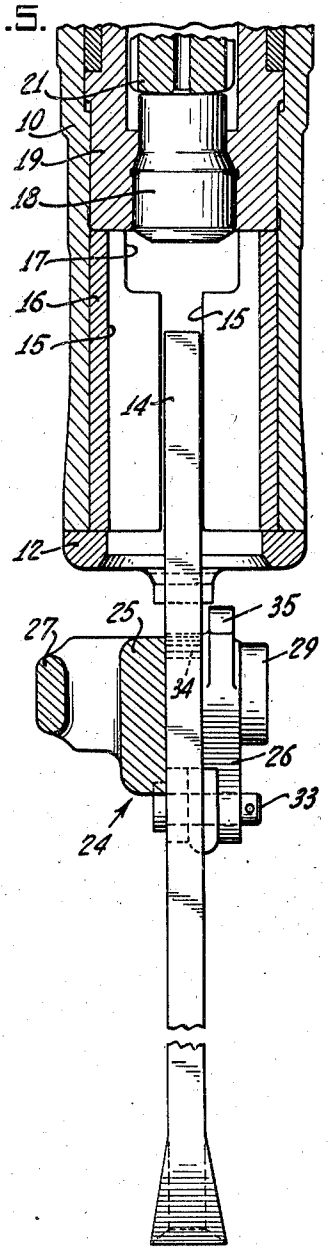

Fig. 6.

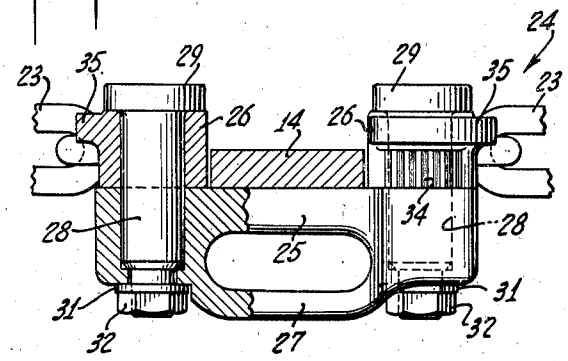

INVENTOR
FRANK E. SINCLAIR.
BY
Raymond G. Mullee
ATTORNEY

Nov. 3, 1942. F. E. SINCLAIR 2,300,980

PULLER FOR BROACHING STEELS

Filed Aug. 18, 1941 3 Sheets-Sheet 3

Fig. 7.

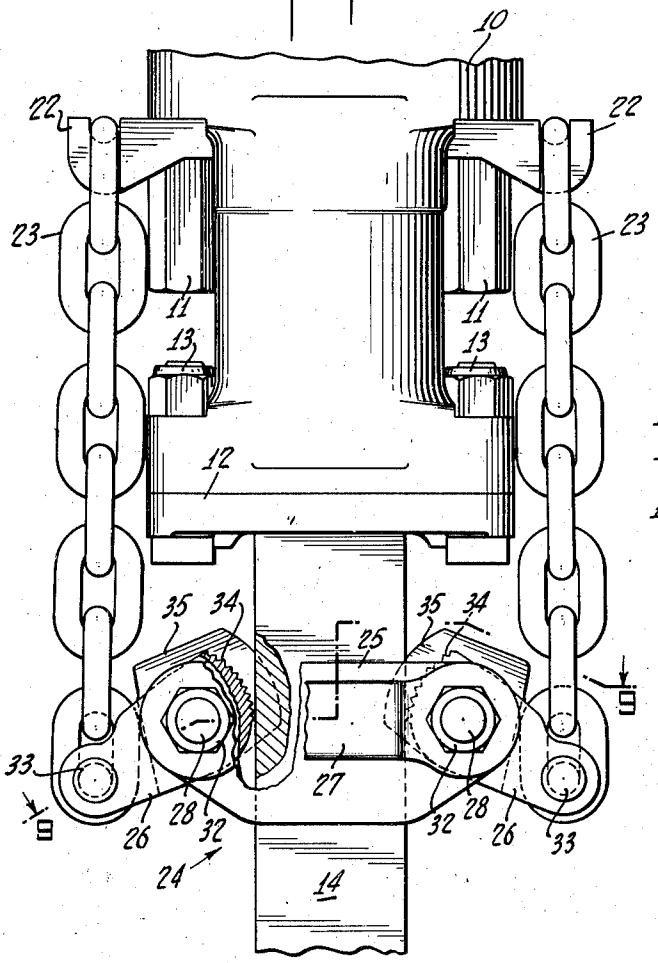

Fig. 8.

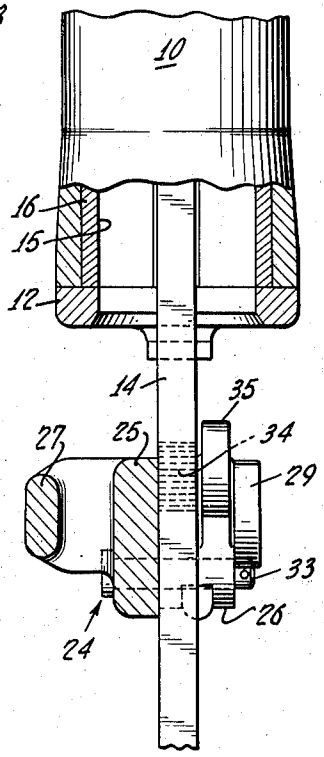

Fig. 9.

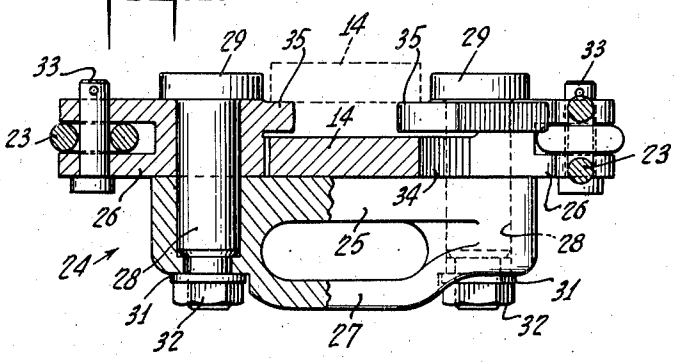

INVENTOR
FRANK E. SINCLAIR.
BY
Raymond G. Mullee
ATTORNEY

Patented Nov. 3, 1942 2,300,980

UNITED STATES PATENT OFFICE

2,300,980

PULLER FOR BROACHING STEELS

Frank E. Sinclair, Claremont, N. H., assignor to Chicago Pneumatic Tool Company, New York, N. Y., a corporation of New Jersey

Application August 18, 1941, Serial No. 407,337

2 Claims. (Cl. 24—248)

This invention relates to steel pulling attachments for hammer drills and like tools employing an independently movable working implement or steel. More particularly, the invention is concerned with that class of pulling attachment which is suspended from the drill or tool body and arranged to grip the steel in such manner as to effect its withdrawal from the work upon retraction of the drill.

Such attachments find a particular use in rock drills used for broaching rock formations, since the broaching steel frequently becomes badly stuck, requiring considerable force and time for its withdrawal.

The principal object of the invention is to obtain a rugged and efficient steel puller which may quickly be attached to and detached from a working steel.

Other objects of the invention are: to control the steel puller through movement of the drill; to assure a firm gripping engagement between the puller and the steel; and to simplify the control and operation of the puller.

In carrying out these objects there has been provided a gripping assembly suspended from the drill or tool body by a pair of flexible elements, and comprising a pair of pivotal gripping elements connected by a cross bar which serves also as a handle to facilitate adjustment of the assembly relatively to the steel.

Other objects and structural details of the invention will be apparent from the following description when read in conjunction with the accompanying drawings, wherein:

Fig. 1 is a fragmentary view, in front elevation, of a tool embodying the device of the invention, the steel puller being shown in freely suspended position before attachment to the steel;

Fig. 2 is a fragmentary view, partly in longitudinal section and partly in side elevation, taken substantially along the irregular line 2—2 of Fig. 1;

Fig. 3 is a view of the gripping assembly in cross-section taken substantially along the irregular line 3—3 of Fig. 1;

Figs. 4, 5 and 6 are views similar to respective Figs. 1, 2 and 3, showing the gripping assembly raised and moved into cooperative relation with the steel preparatory to attachment thereto, Fig. 5 being a complete longitudinal section through the tool; and

Figs. 7, 8 and 9 are views similar to respective Figs. 1, 2 and 3, showing the gripping assembly attached to the steel in position to effect its withdrawal.

The drawings illustrate the front end of a generally conventional rock drill, which has been adapted to receive the flat rectangular steel used in broaching operations. That part of the drill shown includes the cylindrical front head 10, connected to the main body of the tool by side bolts 11, and a cover plate 12 partly closing the open outer end of the front head. The plate 12 is fastened to the front head by bolts 13, passed through complementary ears formed on opposite sides of the adjacent elements, and acts to retain a chuck assembly within the front head. As shown in Fig. 5, the shank of the broaching steel, indicated at 14, is inserted into the tool through a central opening in the plate 12 and is caused to enter one or another of a pair of longitudnal slots 15 in a chuck 16. Both slots 15 terminate, at the inner end of the chuck, in a recess 17 positioned to receive an anvil block 18 mounted in a chuck sleeve 19 rearwardly of the chuck 16. The anvil block 18 lies in the path of movement of a hammer piston 21 and transmits blows of percussion from the piston to the broaching steel. When the tool is pressed against the work, the inner end of the broaching steel extends into the chuck recess 17 in cooperative relation with the anvil. The broaching steel is guided by the chuck 16 or movement coaxial of the front head. The chuck is free within the tool and the steel and chuck therefore may be turned relatively to any rotative position of adjustment. The broaching steel is not locked within the tool and may be withdrawn therefrom by an axial separating movement of either element relatively to the other.

The steel pulling mechanism of the invention takes the form of an attachment dependent from the tool and arranged to grip the broaching steel in advance of the front head. A pair of oppositely disposed hooked portions or lugs 22 project from the exterior of the front head 10 and serve as anchors to which the free ends of respective suspension chains 23 may be attached. The chains 23 are of such length as to extend beyond or below the closure plate 12, at the front of the tool, and are connected at their lower ends to a gripping assembly 24.

The assembly 24 is comprised of a support 25 and a pair of relatively movable sector arms 26 mounted thereon. The support 25 is a rectangular cross bar having a flat smooth surface on one side and a curved portion on the opposite side forming a handle 27. When the assembly 24 is properly attached to the lugs 22, the handle 27 faces outward in position to be grasped by the

operator, while the oppositely disposed flat surface of the cross bar **25** faces the broaching steel **14**. The sector arms **26** are pivotally connected to the supporting bar **25** by means of pivot pins **28**, one of which extends transversely through and beyond each end of the bar. The projecting ends of the pins **28** are formed with heads **29**. On each pin, between the head **29** and the flat inner surface of bar **25** a sector arm **26** is loosely mounted. At their front ends the pivot pins are reduced in diameter and threaded to receive a locking assembly comprising a washer **31** and nut **32**. Each such locking assembly is seated against the outer surface of the bar **25** and holds its respective pivot pin **28** and sector arm **26** in cooperative relation.

The sector arms **26** are similarly constructed and extend rearwardly and forwardly of the pivot pins **28**. The rearward ends of the arms are bifurcated and receive the outer links of the chains **23**. Cross pins **33** extend through the bifurcated portions of the sector arms and through the chain links therein to establish a connection between the chains and gripping assembly **24**. At their forward ends the arms **26** are rounded and formed as serrated jaws **34**. Also formed at the forward end of each sector arm is a flange **35** occupying a projecting position on two sides of the arm.

With the gripping assembly suspended as shown in Fig. 1, the sector arms **26** are substantially vertical, causing the flanges **35** thereon to face inward. Referring to Fig. 3 it will be seen that the distance between the respective flanges at this time is less than the width of the broaching steel so that the gripping assembly can not be moved to place the steel between the jaws **34** of the sector arms. However, if the assembly is lifted a short distance upward, the arms **26** may be rocked, as shown in Figs. 4–6, and the flanges **35** thereby moved out of their limiting position in front of the broaching steel. The steel then may be caused to enter between the sector arms and bear against the flat inner surface of the supporting bar **25**. Now, when the assembly is permitted to drop downward the arms **26** are returned toward their original position until the serrated jaws **34** thereof contact the opposite edges of the broaching steel (see Figs. 7–9). If the tool then is pulled upwards, or retracted, the sector arms are rocked farther into positive gripping engagement with the steel. Continued upward movement of the tool imparts a pulling force to the steel. It will be noted that when the broaching steel is gripped between the jaws **34**, the flanges **35** face inward in such manner as to confine the steel within a restricted slot in the assembly.

The steel puller thus is designed to be used as an attachment serving a number of tools, or it may be made a part of the regular equipment of each broaching tool. In the latter case the puller is held normally in the ineffective position of Figs. 1–3 and may be attached to the steel at any time during the drilling or broaching operation.

What is claimed is:

1. A rock drill attachment for pulling broaching steels, comprising a pair of flexible elements dependent from the drill; a gripping assembly supported by said flexible elements, said assembly comprising a rectangular support formed with a flat surface on one side and a projecting handle-like portion on the opposite side, said support being normally positioned with the flat surface thereof facing said steel; a pair of sector arms pivotally mounted on the flat surface of said support at spaced positions to receive said steel therebetween, the outer ends of each of said arms being connected to a respective flexible element, said arms being rotatable between first and second extremes of movement defined by said flexible elements; arcuate serrated portions on the inner ends of said sector arms cooperating to grip said steel, said serrated portions lying out of cooperative relation with said steel in each of the extremes of movement of said sector arms; and flanges on said sector arms for preventing lateral movement of said steel into and out of position between said sector arms, said flanges being so formed as to be effective in the first of said extremes of movement of said sector arms and to be carried to an ineffective position by movement of said sector arms to the second of said extremes of movement.

2. A rock drill attachment for pulling broaching steels, comprising a support adapted to be suspended transversely of said steel; a pair of sector arms pivotally mounted on said support at spaced positions to receive said steel therebetween; serrated portions on said arms movable into and out of gripping engagement with said steel by a pivotal movement of said arms, said arms having opposite extremes of movement in each of which said serrated portions lie out of gripping engagement with said steel; and flanges on said sector arms for preventing lateral movement of said steel into and out of position between said sector arms, said flanges being so formed as to be effective in one of said extremes of movement of said sector arms and to be carried to an ineffective position by movement of said sector arms to the other of said extremes of movement.

FRANK E. SINCLAIR.