Sept. 4, 1934. A. G. BLANCHARD 1,972,757

AUTOMATIC FUEL CONTROL FOR BOILERS

Filed July 25, 1932

Fig. 1.

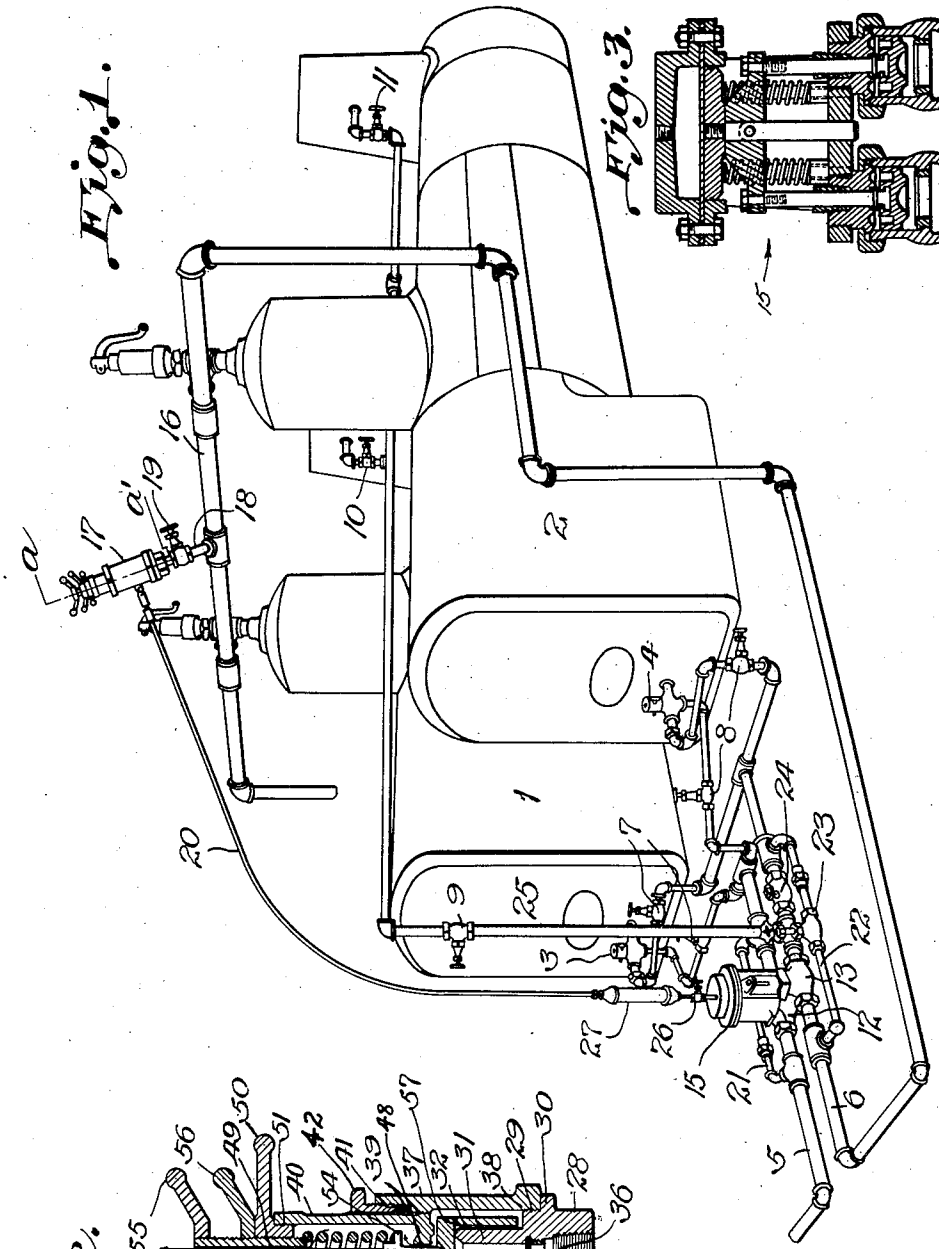

Fig. 3.

Fig. 2.

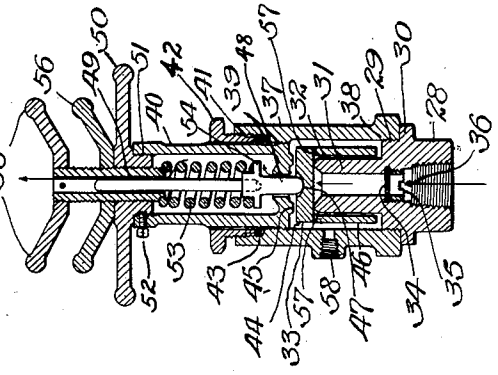

Inventor:

Alva G. Blanchard

Patented Sept. 4, 1934

1,972,757

UNITED STATES PATENT OFFICE

1,972,757

AUTOMATIC FUEL CONTROL FOR BOILERS

Alva G. Blanchard, Shreveport, La.

Application July 25, 1932, Serial No. 624,628

5 Claims. (Cl. 236—26)

My present invention relates generally to boilers and more particularly to boilers employing liquid or gaseous fuel burners. My primary object is the provision of an automatic control for the fuel which will regulate the fire under the boiler or boilers and maintain in the same a nearly uniform pressure which will be effective and efficient throughout a wide range in working load.

A further object is the provision of an arrangement of the character stated capable of continuous efficient operation with but slight, infrequent attention in spite of load fluctuations on the boiler or of scale and dirt and other foreign matter in the fuel and steam lines to and from the boilers.

A still further object is the provision of a control apparatus of simple inexpensive nature which may be readily employed for one or more boilers, and which may be easily and quickly installed and which requires little, if any, change in a boiler in preparation for its installation.

A further object is the provision in a control apparatus of a means of controlling the draft through the boilers, and cutting it off when the main fires in the boilers are cut off.

Further and more specific objects of my invention, as well as the resulting advantages thereof, will appear in the course of the following description and in reference to the accompanying drawing, which forms a part of this specification and in which:

Figure 1 is a perspective view illustrating the practical application of my invention.

Figure 2 is a detail vertical sectional view taken centrally through the pressure control valve at A and A'.

Figure 3 is a detail sectional view of control valve 15 of Figure 1.

Referring now to these figures, and particularly to Figure 1, I have shown two steam boilers, 1 and 2, having fuel oil burners, 3 and 4, to which oil and steam supply pipes, 5 and 6, are respectively connected. On each of these pipes cut off valves, 7 and 8, are connected adjacent to the burners, 3 and 4, in order to maintain the steam pressure desired and get the maximum efficiency of the fuel mixture.

The steam valve 9 controls the amount of steam going to the blower in each boiler through valves 10 and 11, which is set to get the right amount of draft through the boiler in order to burn the desired amount of fuel efficiently.

The supply pipes 5 and 6 extend through the adjacent valves, 12 and 13, of the fuel control valve, generally indicated at 15. The oil line 5 in practice leads from any suitable source of oil supply while the steam line 6 preferably leads from the steam header 16.

A pressure control valve generally indicated at 17 is connected by a pipe 18 to any suitable point on the header line 16 where dry steam is present. The valve 19 is to enable the operator to close the steam pressure from the pressure control valve 17 for adjustments.

The control valve 17 is in turn connected by a pipe 20 with the fuel control valve, 15, so that when a pressure accumulates within the boiler steam space sufficiently to open the valve 17, such steam passes through pipe 20 and actuates the fuel control valve, 15, so as to stop the passage of oil and steam through the valves 12 and 13.

Connected at their ends to the pipes 5 and 6 at opposite sides of the valve portions 12 and 13 of the fuel control valve 15 are a pair of by-pass pipes 21 and 22 each having a manual control valve 23. These pipes 21 and 22 with their respective manual control valve 23 provide for a pilot flame at the burners 3 and 4 when the main supply of oil and steam as regulated by the valves 7 and 8 is cut off by the valves 12 and 13.

The check valve 24 is to prevent any steam from going up through the blower line 25 while the pilot fire is on which permits the blowers to be on as regulated by the valves 9, 10 and 11, only while the valves 12 and 13 are open.

The control valve 15 by which the adjacent valves 12 and 13 are opened is of the piston diaphragm type; that is to say, the valves 12 and 13 are of the quick-opening globe type, the stems of which are connected to a cross head which in turn is connected to a piston. In the upper part of the control valve over this piston and between the main body and head is stretched a soft rubber diaphragm, which effectively permits the piston to travel downwards on an application of pressure through line 20 which at the same time prevents any leaks. The valve 26 is to control the entrance and exit of the condensed water to the control valve 15 which controls the speed with which the main fire is turned off and turned on again. The chamber 27 is a condensing chamber in order that the live steam that comes in the line 20 may be condensed into cold water and a supply of cold water maintained to operate the control valve 15. This cold water effectively prevents any deterioration in the rubber diaphragm in the upper part of the control valve 15.

Referring now to Figure 2, the pressure control valve 17 includes a cylindrical base portion 28, the lower end of which through valve 19 and pipe 18 is connected to the header of the boiler. This base has an intermediate, threaded section 29, above an annular flange 30, and also has a reduced upper end forming a nipple 31, provided with a circular seat 32, on which the valve member 33 normally rests. The base portion 28 is also provided with six fine screens of 120 mesh wire 34, which are held in place by a hollow screw 35, which is provided with slots 36 for screwing into place to hold the screens, 34. This screen effectively blocks the passage of all dirt and scale that would ordinarily find its way into the steam valve. The body 37 of this valve is of vertically elongated cylindrical form, with a lower skirt 38, internally threaded to engage the thread, 29, in the base portion, 28, and resting on the flange 30. The body 37 surrounds the valve member 33 in spaced relation and is threaded internally at 39 to receive the adjustable seat portion 40 and is also threaded at 41 internally to receive a packing nut 42 by which means the packing 43 is sufficiently compressed in order to prohibit the escape of steam from the chamber 44 around the threads 39 to the atmosphere. The lower part of the member 40 has an annular, circular rib, 45, which forms an upper seat against which the valve member 33 may be thrown when the steam pressure below the valve member 33 exceeds the spring pressure from above.

Upon a predetermined decline in steam pressure, the valve 33 will close against the boiler pressure and I may vary the distance the valve 33 travels between the lower seat 32 and the upper seat 45 by screwing the upper seat body 40 up or down by means of the threads 39. The valve member 33 has an apertured flange 46 surrounding the upper reduced portion 31 of the valve base 28, so as to guide the valve member in its movement, and is centrally engaged at its upper side at the point 47 by the plunger 48. The upper end of this plunger 48 stands in the body 40 and has its upper extremity loosely disposed in a tubular adjusting screw 49 which is threaded to fit within the plug 50 which is in turn threaded at 51 to close the upper end of the body 40 and is securely locked in place by the set screw 52. By rotation of the plug 50 and the body 40 said body including its seat 45 is raised or lowered to secure the variation in travel of the valve 33 which governs the opening and closing of this valve. A spring 53 surrounds the plunger 48, the upper end of the spring engaging the lower end of the adjusting screw 49 and the lower end of the spring engaging the annular flange 54 on the plunger 48. By means of the arms 55 which are securely pinned to the adjusting screw 49 the tension on the spring 53 is increased or decreased and is locked in position by the lock nut 56. Thus the steam from the boiler on entering the valve 17 at its base 28 is held from passing valve 33 by the tension of the spring 53 until the pressure against the lower side of said valve slightly exceeds the spring pressure. When the valve 33 is slightly raised from its lower seat 32, the additional full area is then presented for the steam to operate against and the pressure of the steam throws the entire valve 33 a predetermined distance against the upper seat 45 and holds it there securely. Then the steam escapes through small holes 57 in the side of the skirt 46 on the valve 33 into the chamber 44, from which it escapes through the opening 58 through the line 20 to the piston in the upper part of the control valve 15. This pressure throws the piston to which is connected the cross-head and valve stems of the valves, 12 and 13, down, thus cutting off the supply of fuel and steam to the burners. At this time the pilot fire in the burners 3 and 4 are set by adjusting the by-pass valves 23, care being used that the pilot fire is set small enough so that steam pressure will not continue to raise. When the boiler pressure has dropped enough so that the spring pressure of the spring member 53 slightly exceeds the boiler pressure the opening between the valve 33 and the seat 45 is slightly opened, building up an additional pressure in excess of that of atmosphere over the entire upper surface of the valve 33, assisting the pressure of the spring 53 to throw the valve 33 down against its lower seat 32, which cuts off the boiler pressure. The springs under the piston in the valve portion 15 which ordinarily hold the piston in an upward position then force the water and steam up through the line 20 through the opening 58 in the valve 17 into the inner chamber. The steam in the housing above the valve 33 thus passes between the valve 33 and the upper seat 45 and around the plunger 48 and thence through and around the upper part of the stem and between adjusting screw 49 to the atmosphere. While this steam is escaping, the valves 12 and 13 are opening permitting the normal supply of fuel and steam to the burners 3 and 4 as adjusted by the valves 7 and 8. The normal fire in the boilers, sufficient to hold steam under the full load is thus resumed and continued until such time as the steam pressure in the boiler again exceeds the pressure at which the valve 17 is set, at which time a new cycle of events transpire within valve 17 until the valves 12 and 13 are opened again by a decline in steam pressure within the boilers. The arrangement proposed by my invention has among its many advantages the ability to operate over long periods, using either oil or gas as fuel with little if any attention after being once set and adjusted to carry the pressure desired, and is capable of ready extension to the control of a number of boilers by extending the fuel and steam lines through respective control valves to the additional boilers.

Having thus described my invention in full, I claim:

1. In combination with steam boilers and fuel burners thereof, a pair of supply pipes leading to the burners, a control valve, having a pair of valve members controlling said pipes and a pressure piston actuating said valve members, by-pass pipes connected to the supply pipes around said valve members and having manually controlled valves to adjust pilot fires, a pressure control valve having a connection with the steam space of the boiler and a second connection leading to the piston of the fuel control valve, said pressure governor valve including a valve member controlling communication between the said connection to the boiler and the pressure piston said governor valve being opened by steam pressure exerted directly against said valve and manually adjusted spring pressure means to resist pressure opening thereof.

2. In a fuel control apparatus a pressure control valve including a cylindrical body having a base portion of hollow form provided with an upper reduced portion, a seat on said reduced portion a valve member thereon, an adjustable

upper seat threaded in connection and surrounded by the body in spaced relation, a flange on said valve member surrounding the reduced portion of the base to guide the valve member in its movements, and manually controlled means for normally holding the valve member seated on the base.

3. In combination with steam boilers, fuel burners therefor, a pair of supply pipes leading to said burners, a control valve having a pair of valve members controlling the passage of fluid in said pipes, a pressure actuated piston in said control valve, a steam line from said boilers to said piston, means in said steam line normally closing said line, but opening by steam pressure at a predetermined steam pressure in said boilers to admit steam to said control valve to close said supply pipes and means in said line adjacent said control valve to prevent contact of steam with said control valve.

4. In a fuel control apparatus, a pressure control valve having a hollow base and a hollow body, a nipple on said base in said body, a valve seat on said nipple, a second seat above said nipple, a valve movable between and in engagement with one of said seats, a guide skirt on said valve above said nipple, said skirt having fluid passages therethrough, means to normally hold said valve in closed position, and a fuel valve control device operated by steam passing said pressure control valve.

5. In combination with steam boilers and fuel burners thereof, a pair of fuel supply pipes leading to the burners, a fuel control valve having a pair of valve members controlling said pipes and a pressure piston actuating said valve members, by-pass pipes connected to the supply pipes around said valve members having manually controlled valves, and a pressure control valve having a connection with the steam space of the boiler and a second connection leading to the piston of the fuel control valve, said pressure valve including a valve member controlling communications between the said connections, said valve opening when the steam pressure reaches a predetermined value, and manually adjusted spring pressure means to resist pressure opening thereof, and cut-off valves on each supply pipe between the fuel control valve and the burners whereby the supply pipes to either boiler may be utilized or cut out of operation as desired.

ALVA G. BLANCHARD.