US 20030107039A1

(19) **United States**

(12) **Patent Application Publication** (10) **Pub. No.: US 2003/0107039 A1**

Jung et al. (43) **Pub. Date: Jun. 12, 2003**

(54) **THIN FILM TRANSISTOR ARRAY PANEL**

(76) Inventors: **Cheol-Soo Jung**, Asan-city (KR); **Young-Sun Kim**, Cheonan-city (KR); **Ho-Joon Lee**, Anyang-city (KR); **Yeong-Hwan Cho**, Cheonan-city (KR); **Hyeon-Hwan Kim**, Cheonan-city (KR); **Bung-Hyuk Min**, Cheonan-city (KR); **Woon-Yong Park**, Suwon-city (KR); **Il-Gon Kim**, Suwon-city (KR); **Jang-Soo Kim**, Suwon-city (KR); **Jin-Oh Kwag**, Suwon-city (KR); **Seog-Chae Lee**, Yongin-city (KR)

Correspondence Address:
McGuireWoods LLP
Suite 1800
1750 Tysons Boulevard
McLean, VA 22102 (US)

(21) Appl. No.: **10/139,396**

(22) Filed: **May 7, 2002**

Related U.S. Application Data

(63) Continuation of application No. 09/527,803, filed on Mar. 17, 2000, now Pat. No. 6,441,401.

(30) **Foreign Application Priority Data**

Mar. 19, 1999 (KR) 1999-9421
Dec. 28, 1999 (KR) 1999-63762

Publication Classification

(51) **Int. Cl.**[7] **H01L 29/04**
(52) **U.S. Cl.** **257/72**

(57) **ABSTRACT**

A gate line extending in a horizontal direction is formed on an insulating substrate, and a data line is formed perpendicular to the gate line defining a pixel of a matrix array. Pixel electrodes receiving image signals through the data line are formed in a pixel, and a thin film transistor having a gate electrode connected to the gate line, a source electrode connected to the data line, and a drain electrode connected to the pixel electrode is formed on the portion where the gate lines and the data lines intersect. A storage wire including a storage electrode line in the horizontal direction, a storage electrode connected to the storage electrode line, and at least one of the storage electrode connection portions connecting storage electrodes of neighboring pixels is formed in the same direction as the gate line. A redundant repair line overlaps and is insulated from the storage wire at one end and overlaps the storage wire or the gate wire of a neighboring pixel at the other end is formed in the same layer as the data wire. Also, a storage wire connection portion connecting the storage wires of a neighboring pixel is formed in the same layer as the pixel electrode. In this structure, if portions of the gate wire or the data wire are disconnected, the portions overlapping the disconnected wire, the storage wire, and the redundant repair line are shorted to repair an open wire defect.

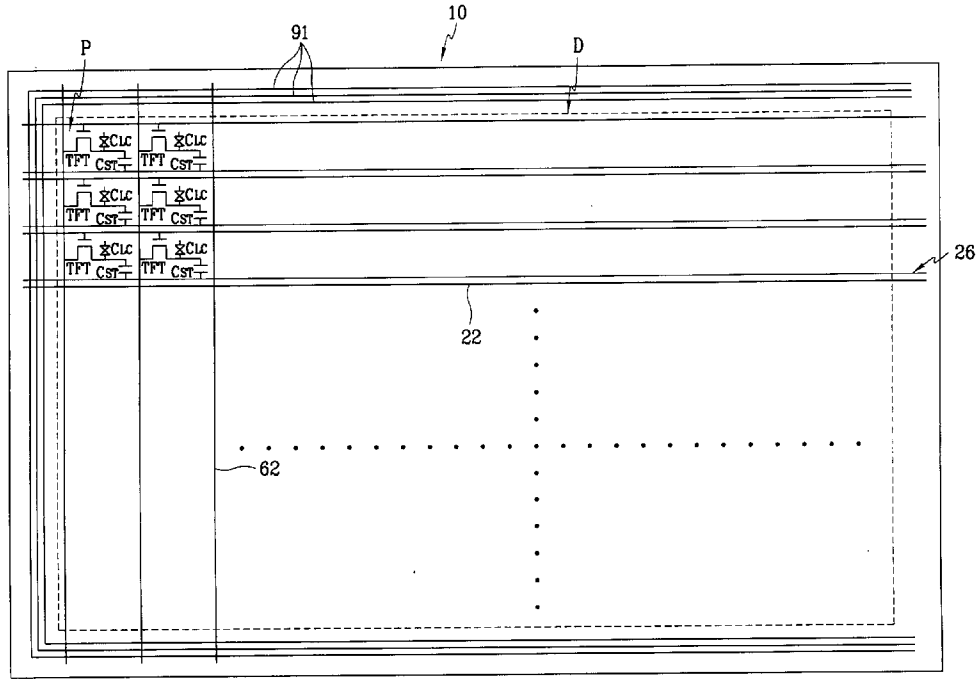

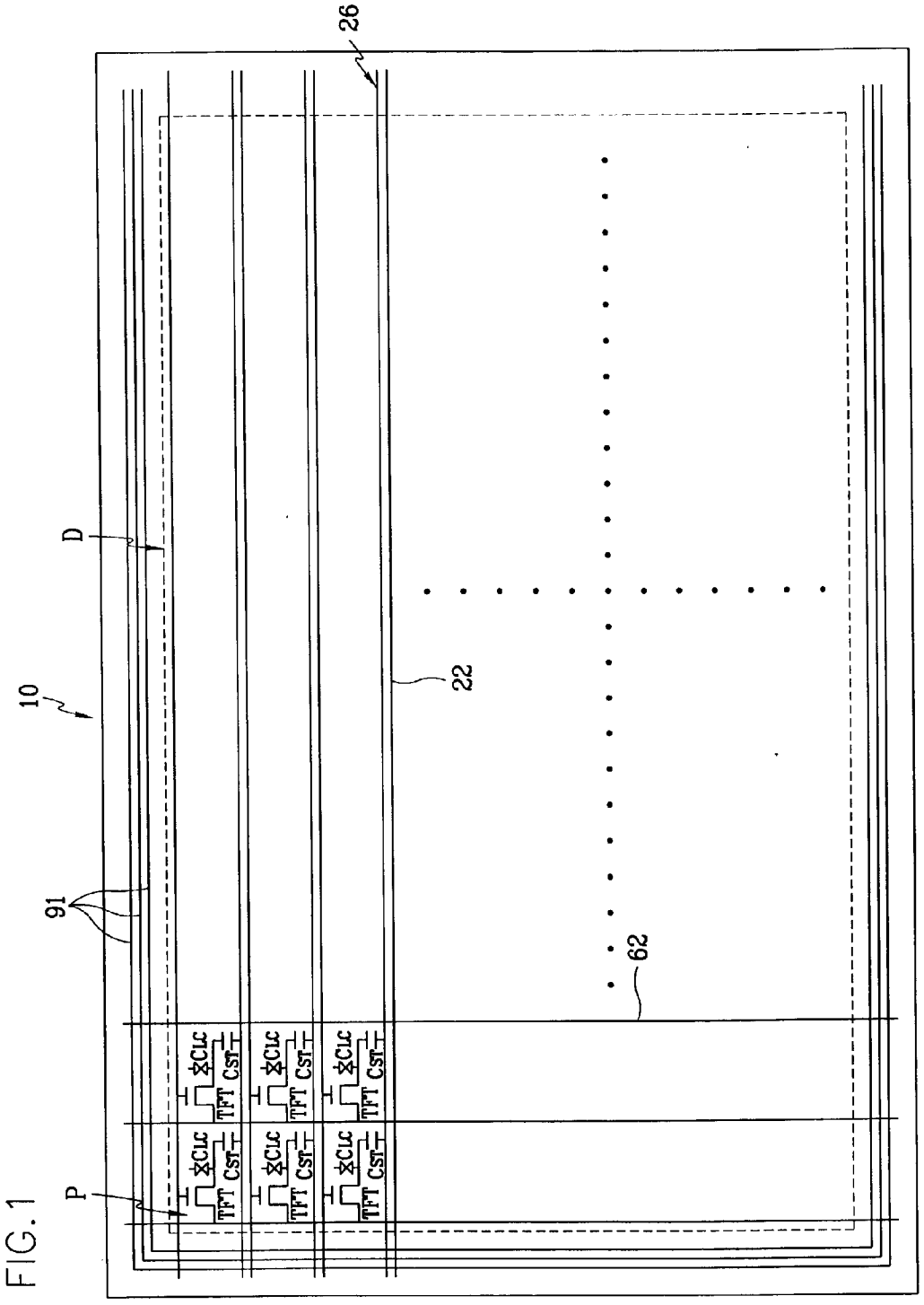

FIG. 1

FIG.2

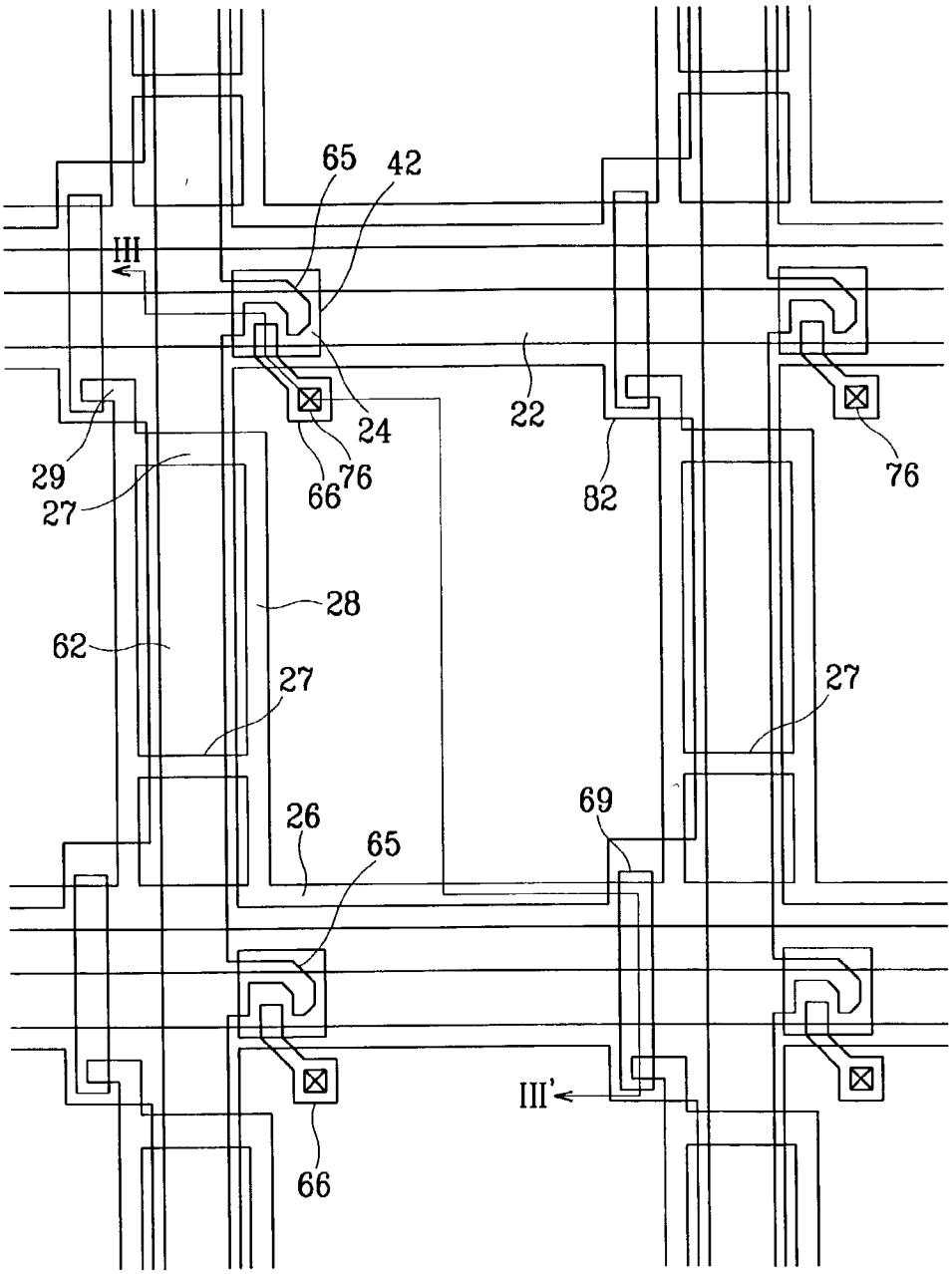

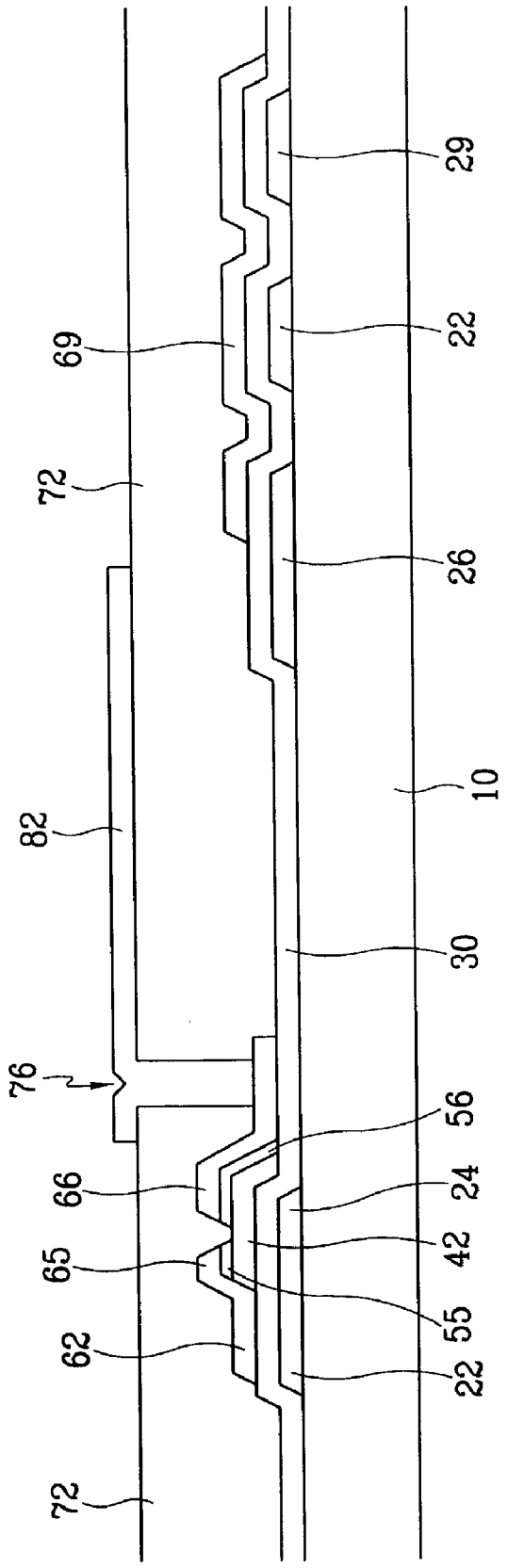

FIG. 3

FIG.4A

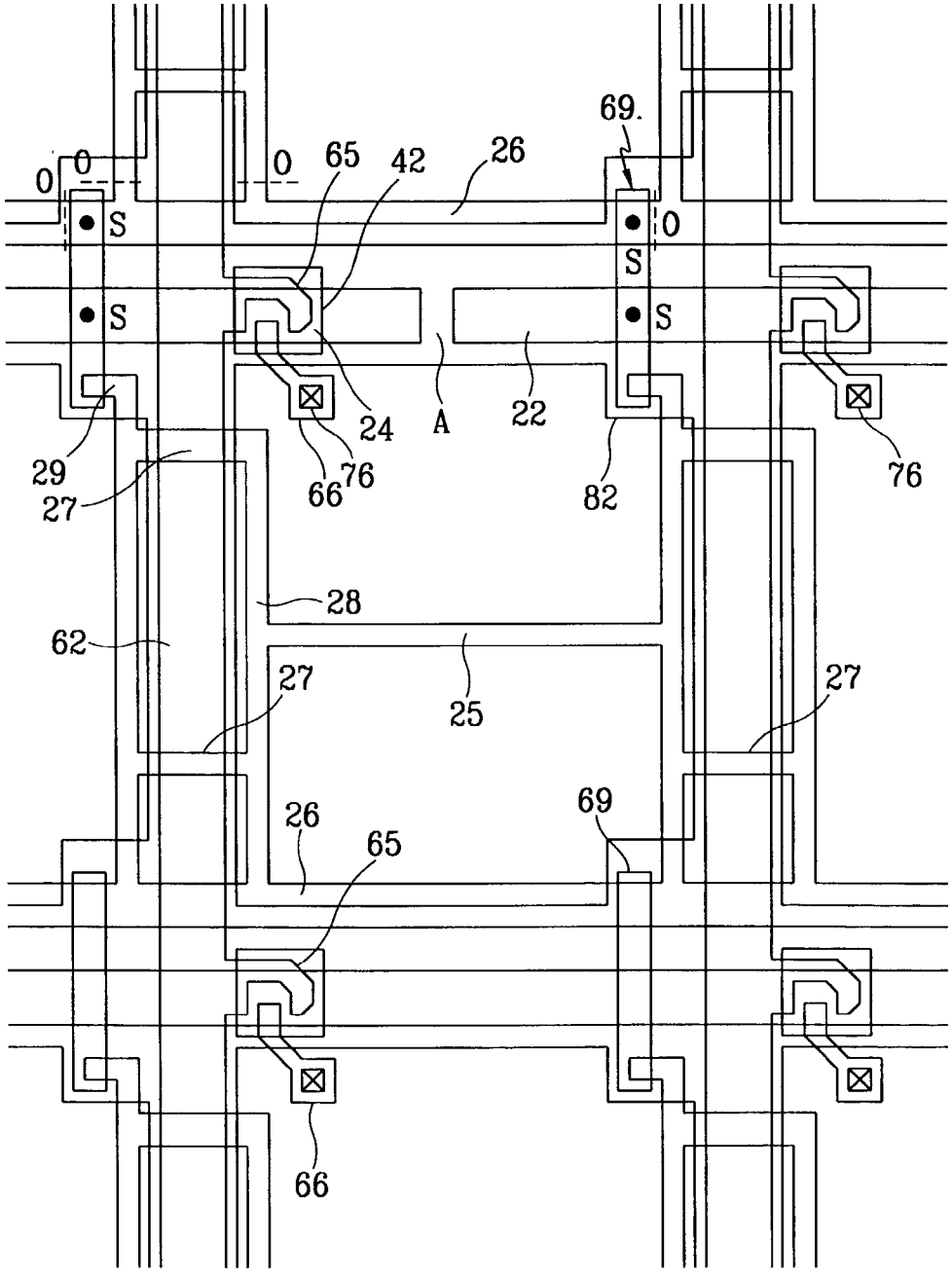
69
0
0
0
65
42
26
S
S
S
S
0
24
A
22
29
27
66
76
82
76
28
62
27
25
27
26
69
65
66

FIG.4B

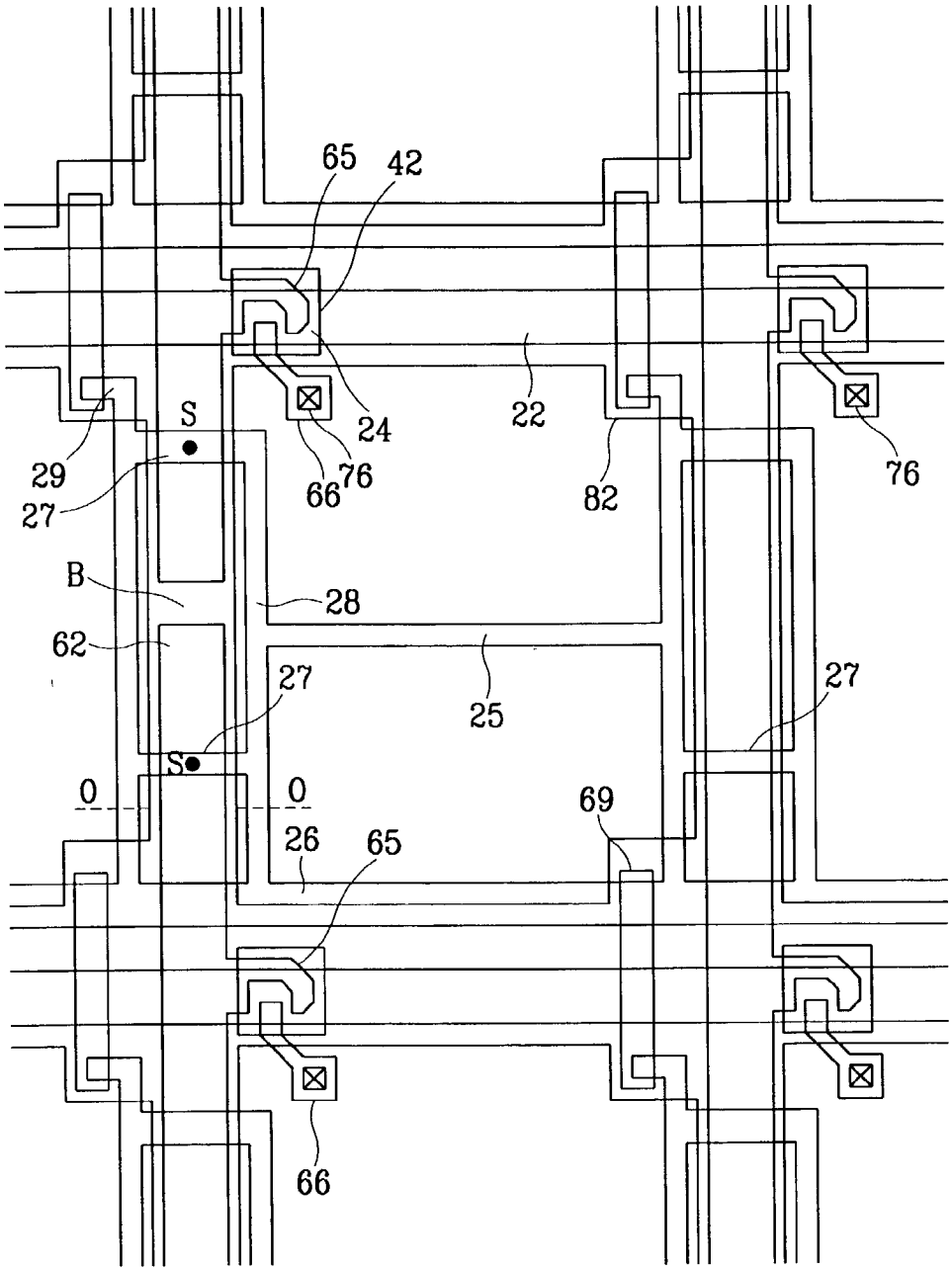

FIG.4C

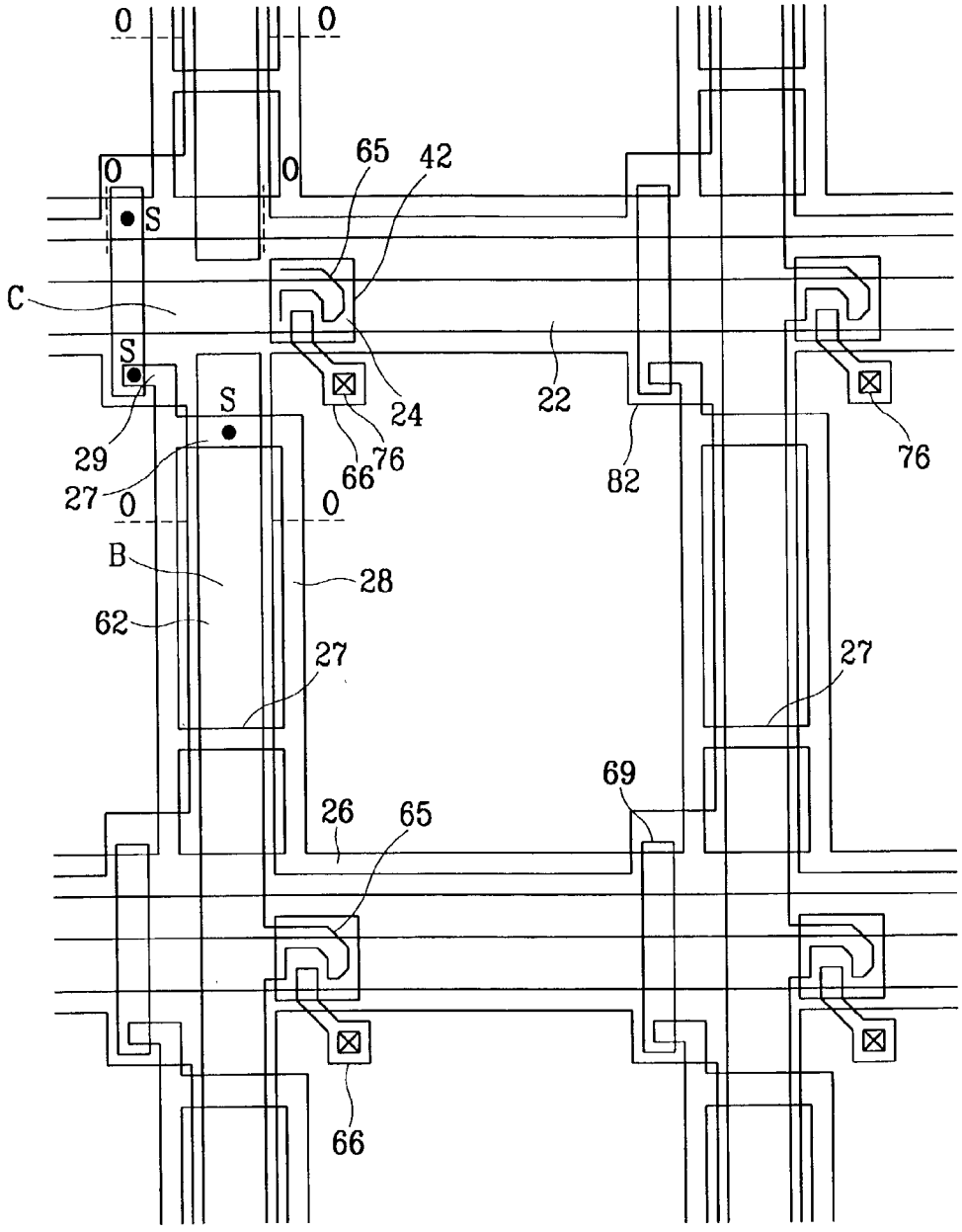

FIG.5

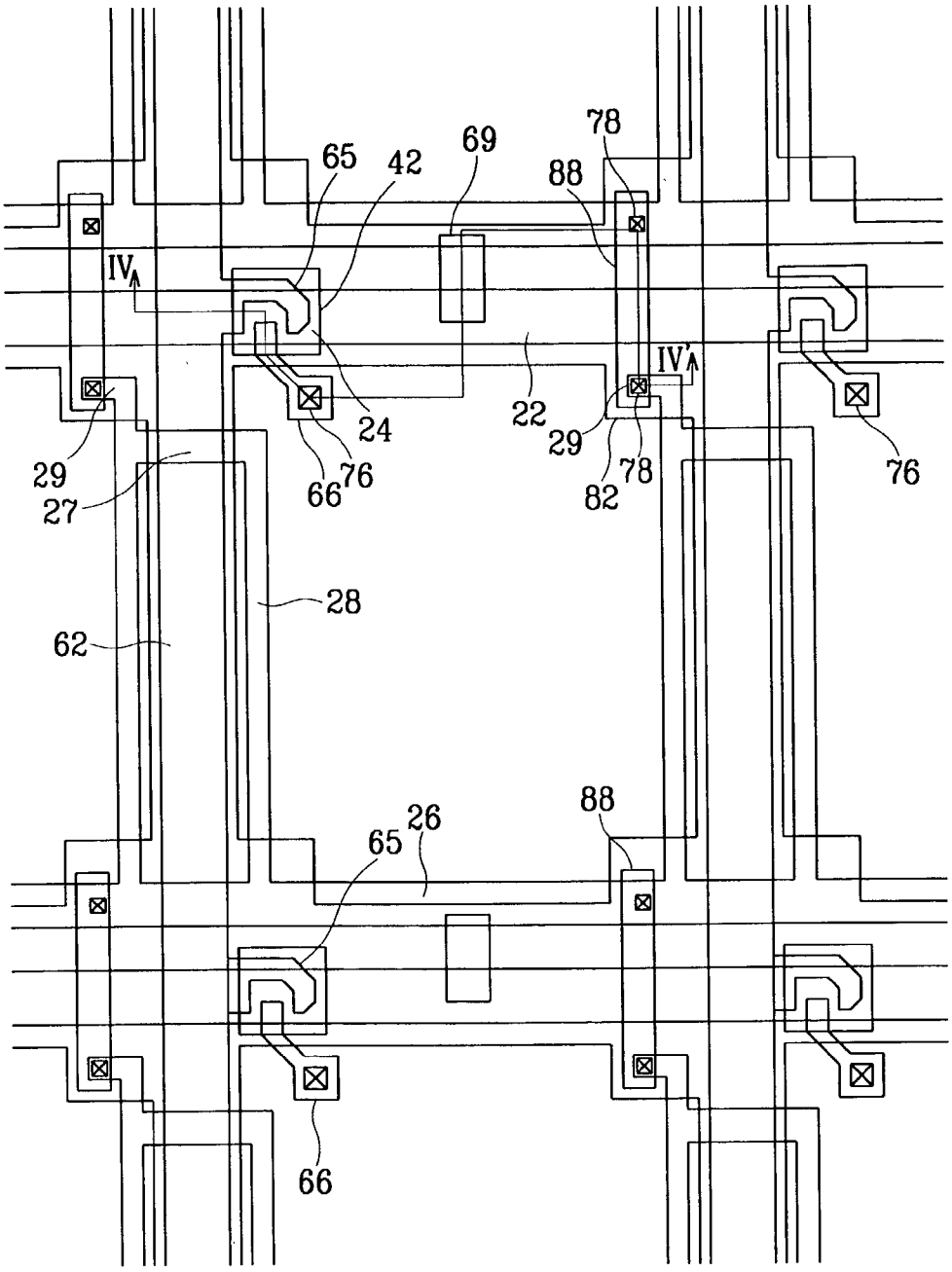

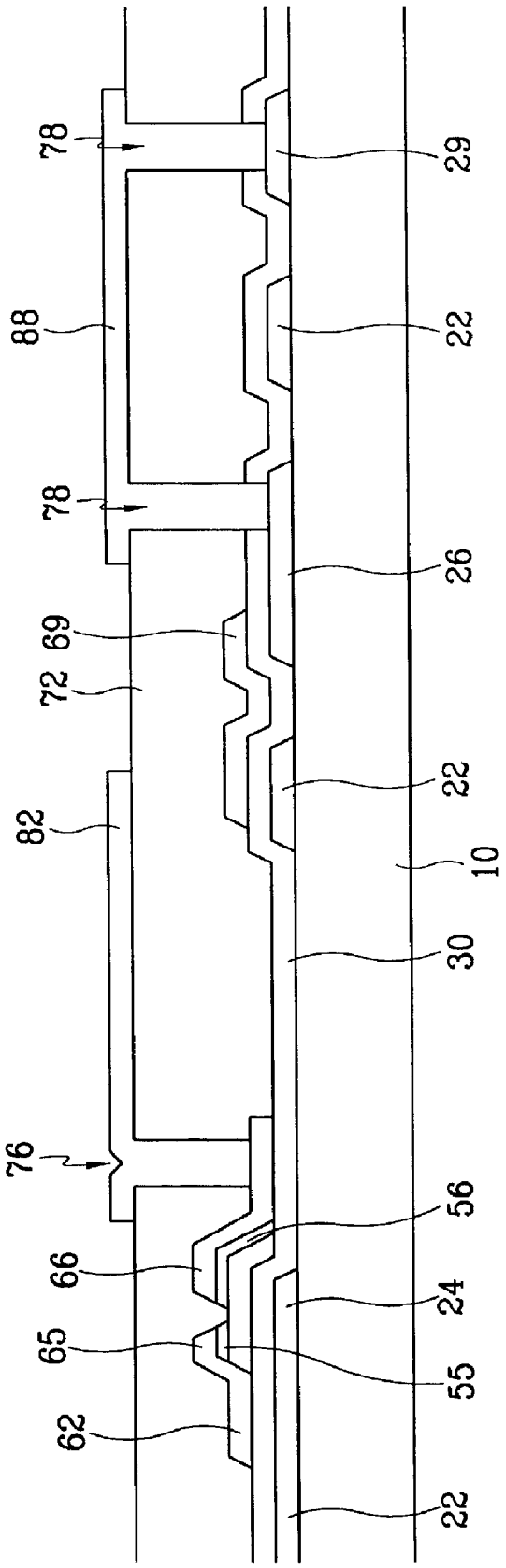

FIG.6

FIG. 7A

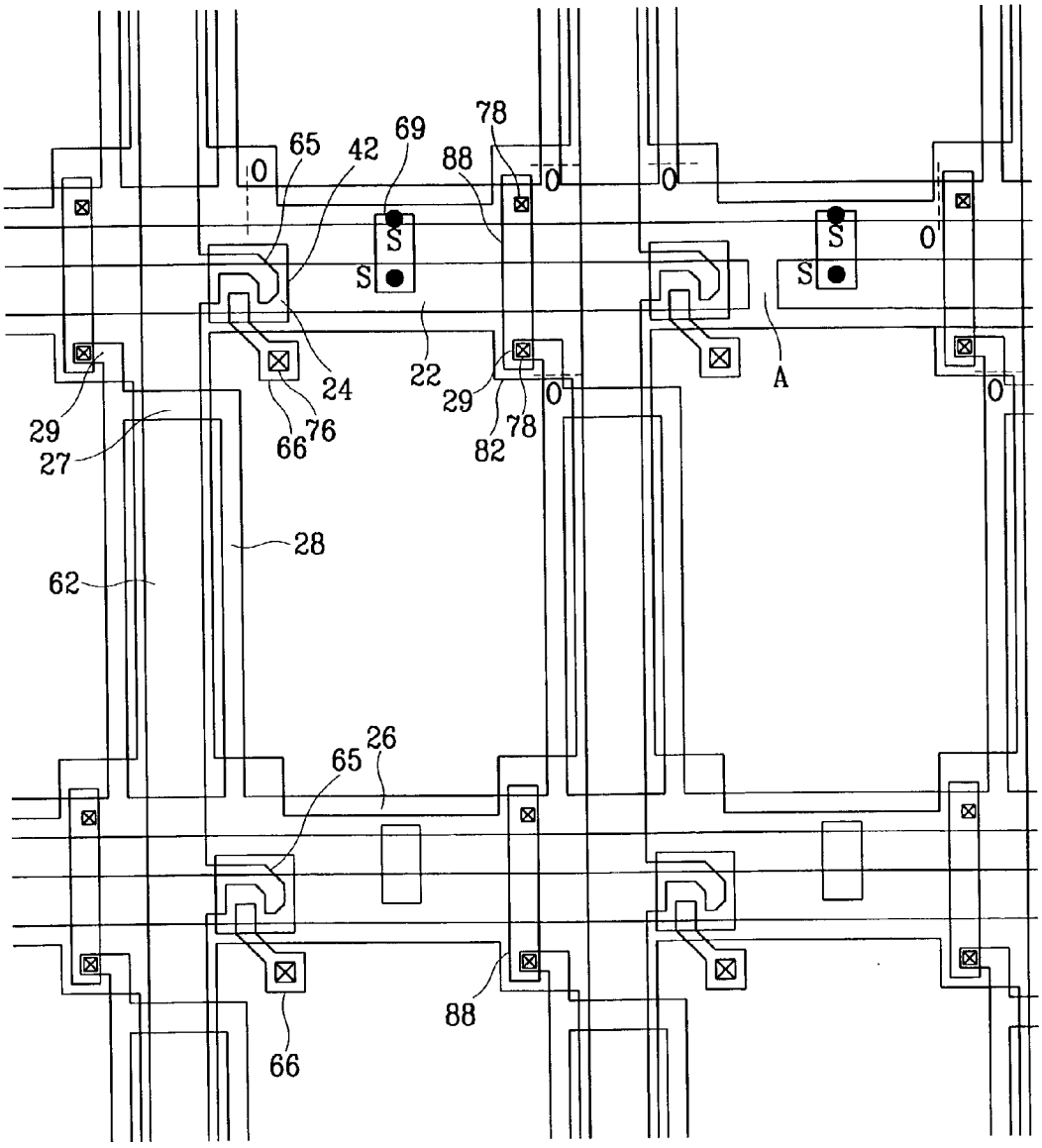
65
42
69
78
88
0
0
0
S
S
S
S
0
0
0
0
24
22
29
29
27
66
76
82
78
A
28
62
26
65
88
66

FIG. 7B

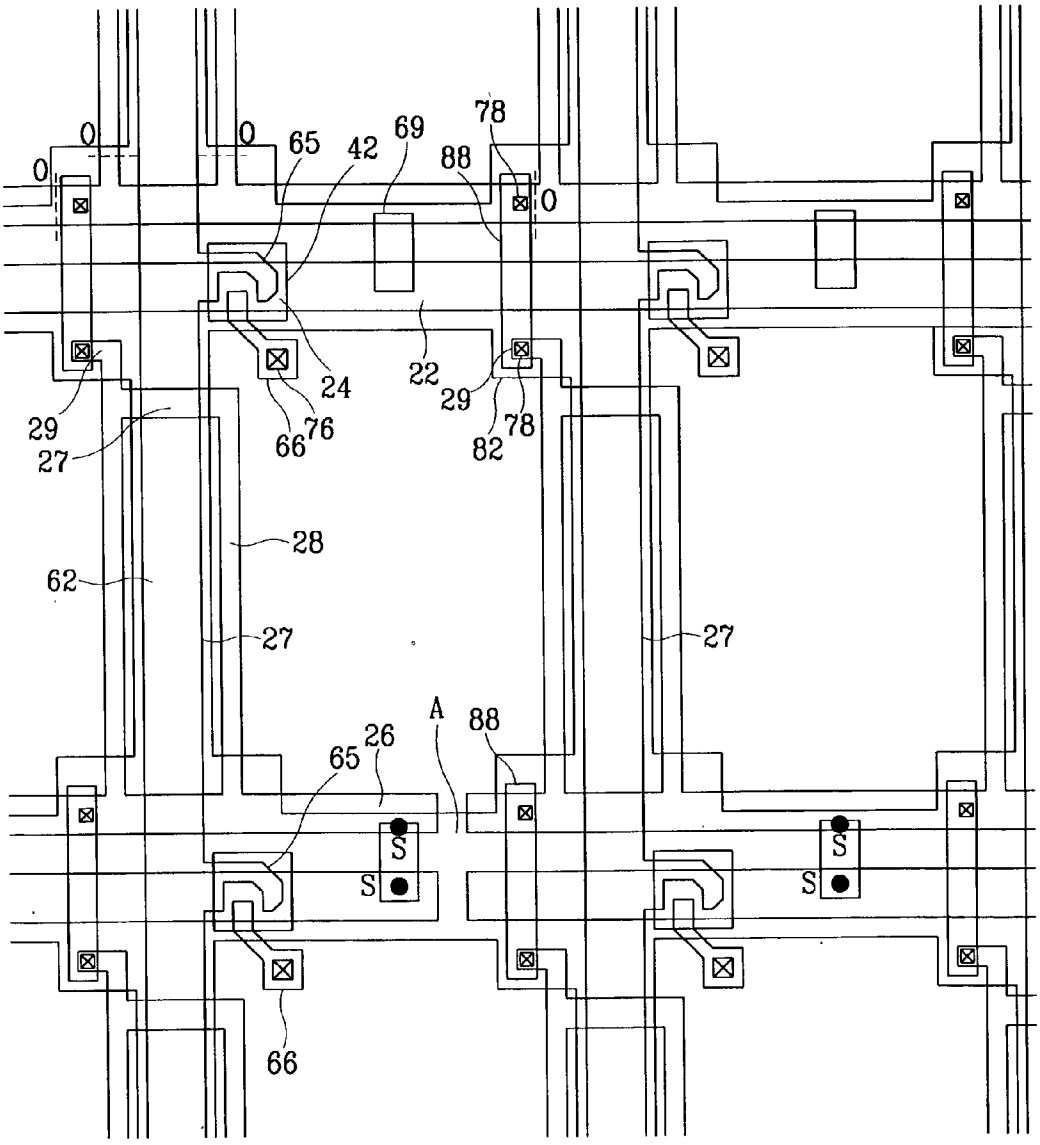

FIG.8

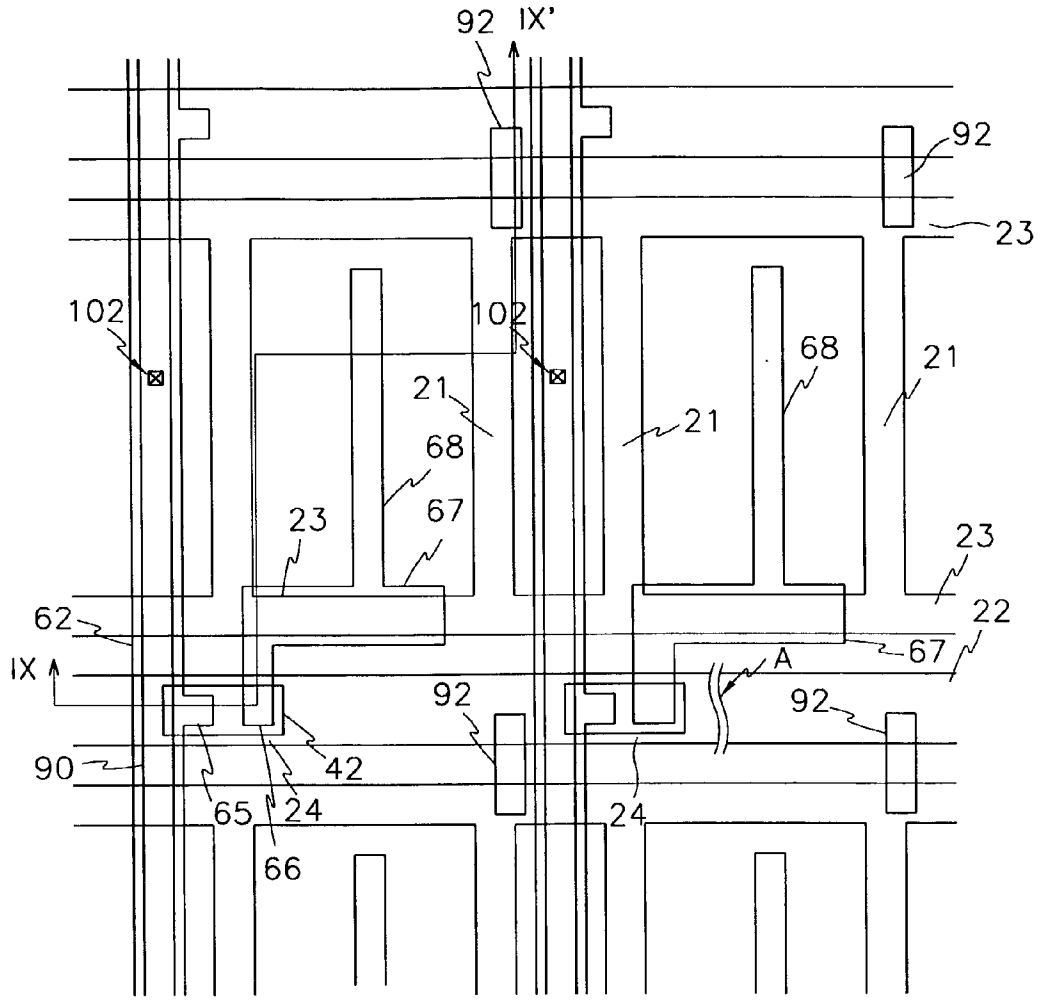
92
IX'
92
23
102
102
68
21
21
21
68
67
23
23
62
22
IX
67
A
92
92
90
42
65
24
66
24

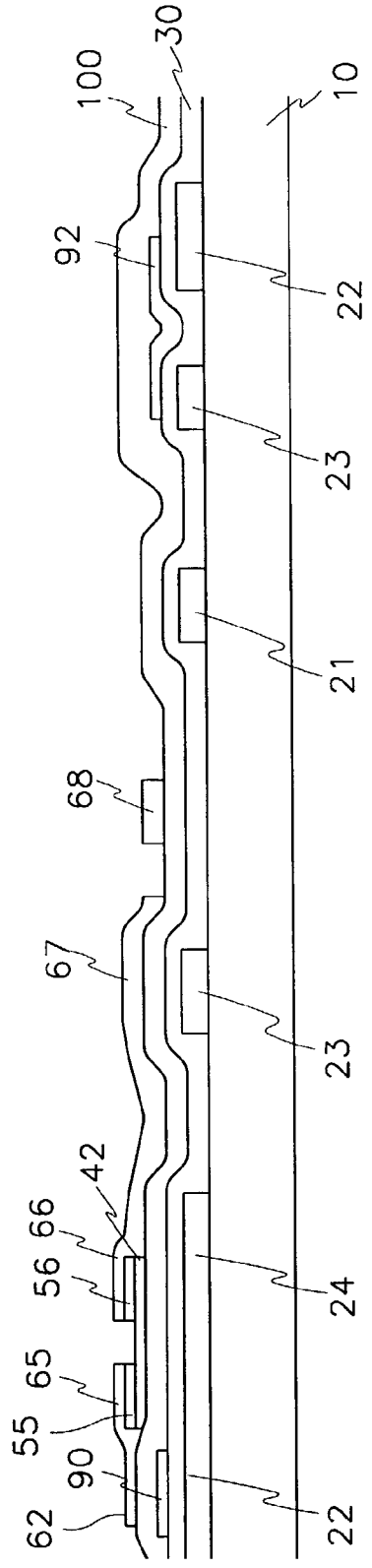

FIG. 9

FIG. 10

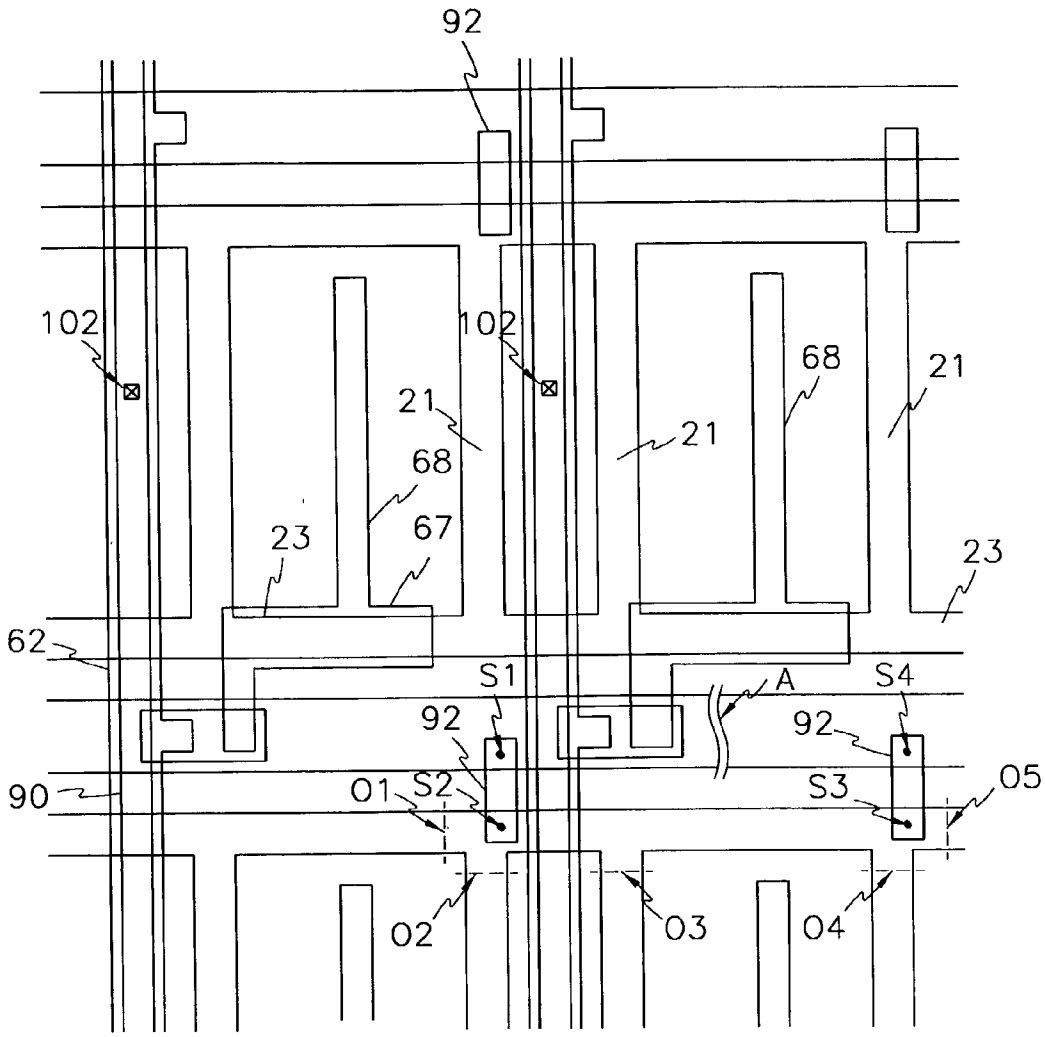
92
102
102
21
68
21
21
68
23
67
23
62
S1
A
S4
92
92
90
01
S2
S3
05
02
03
04

FIG. 11

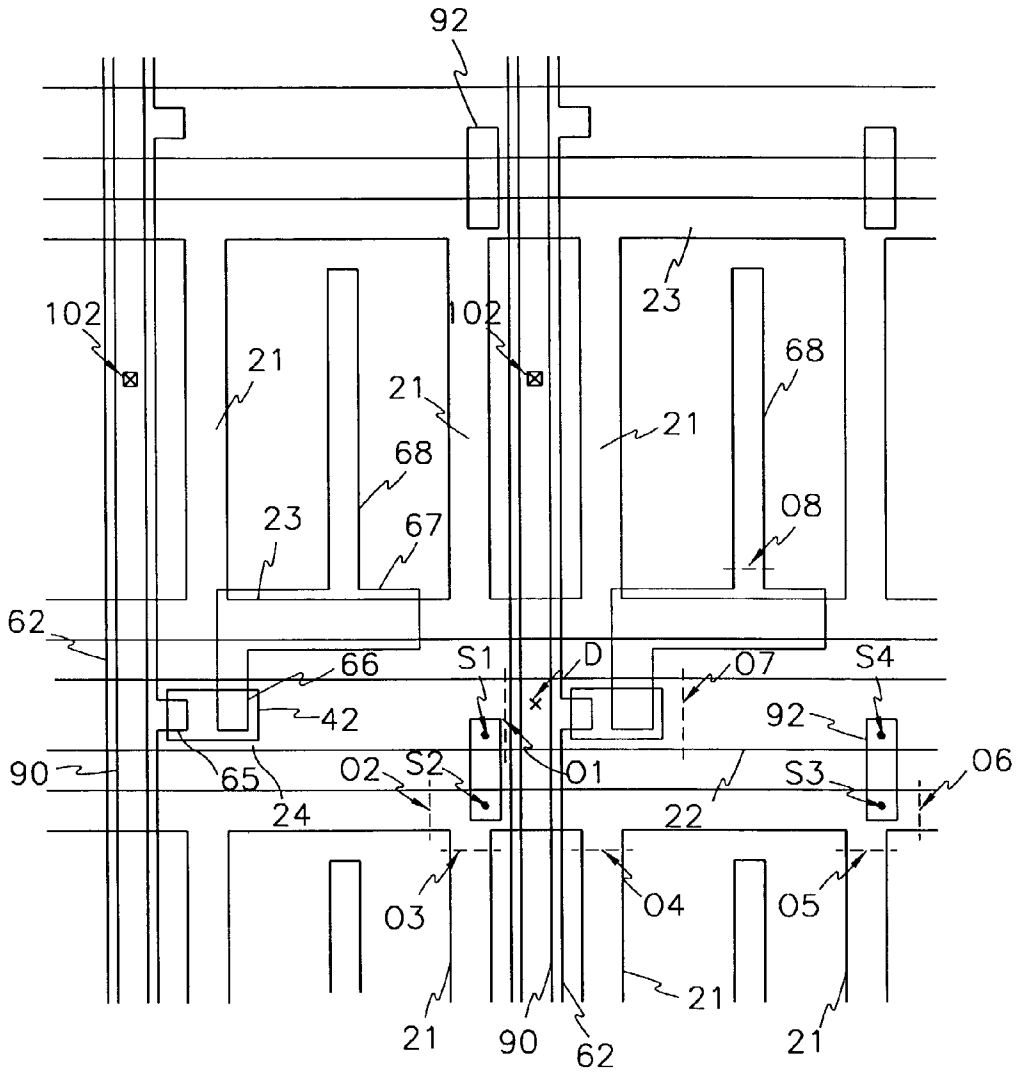
92
102
102
21
21
21
23
68
68
23
67
08
62
66
S1
D
07
S4
42
92
90
65
02
S2
01
S3
06
24
22
03
04
05
21
21
90
62
21

FIG. 12

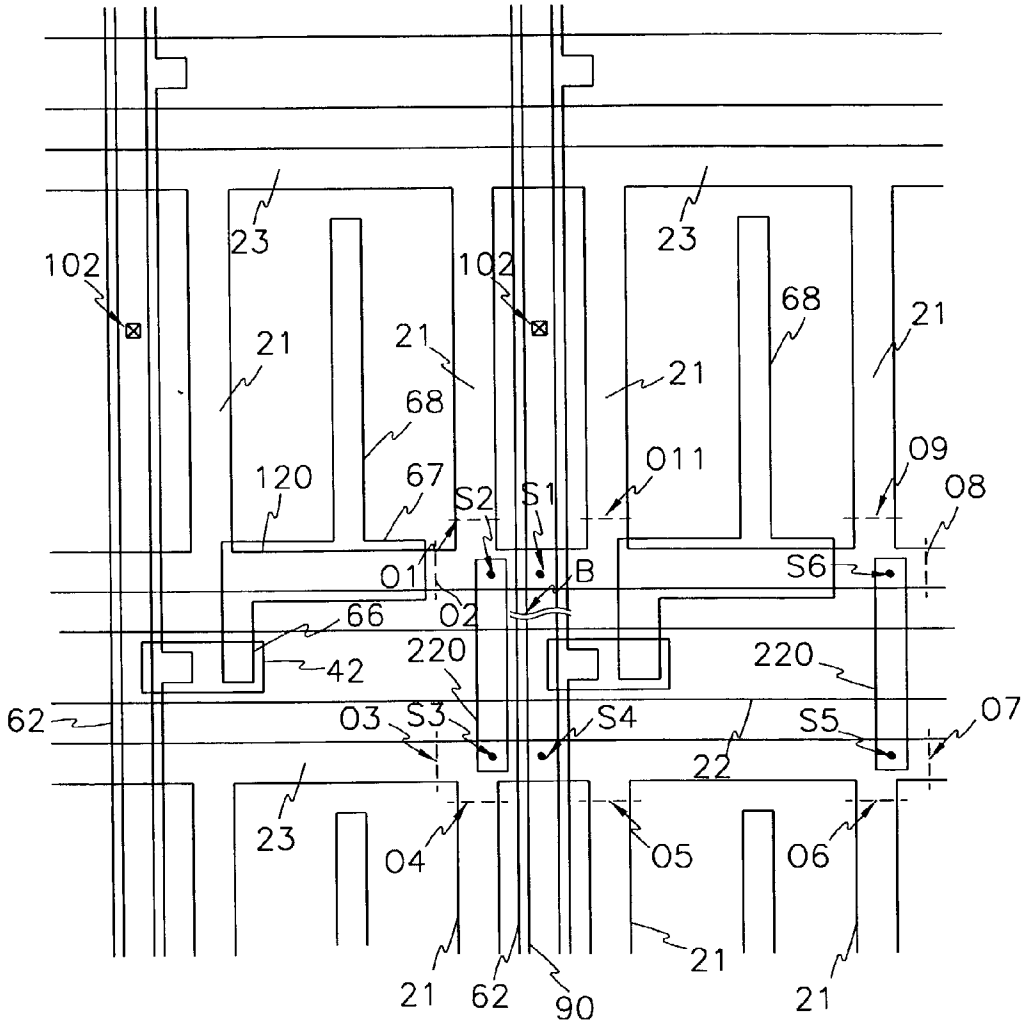
102
23
21
68
120
67
S2
S1
011
09
08
01
B
S6
66
02
42
220
62
03
S3
S4
S5
07
22
04
05
06
90

FIG. 13

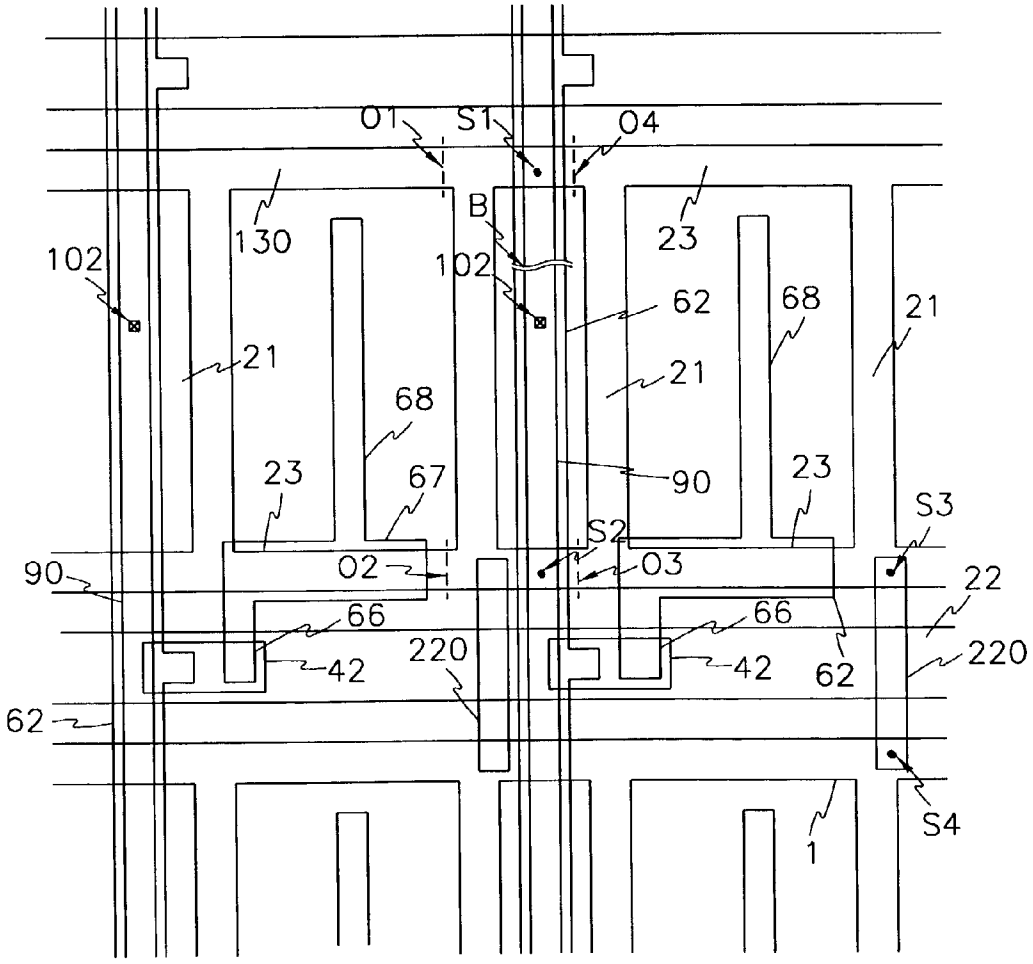
01
S1
04
B
130
102
102
23
62
68
21
21
21
68
23
67
90
23
S3
S2
02
03
90
22
66
66
220
42
42
62
220
62
S4
1

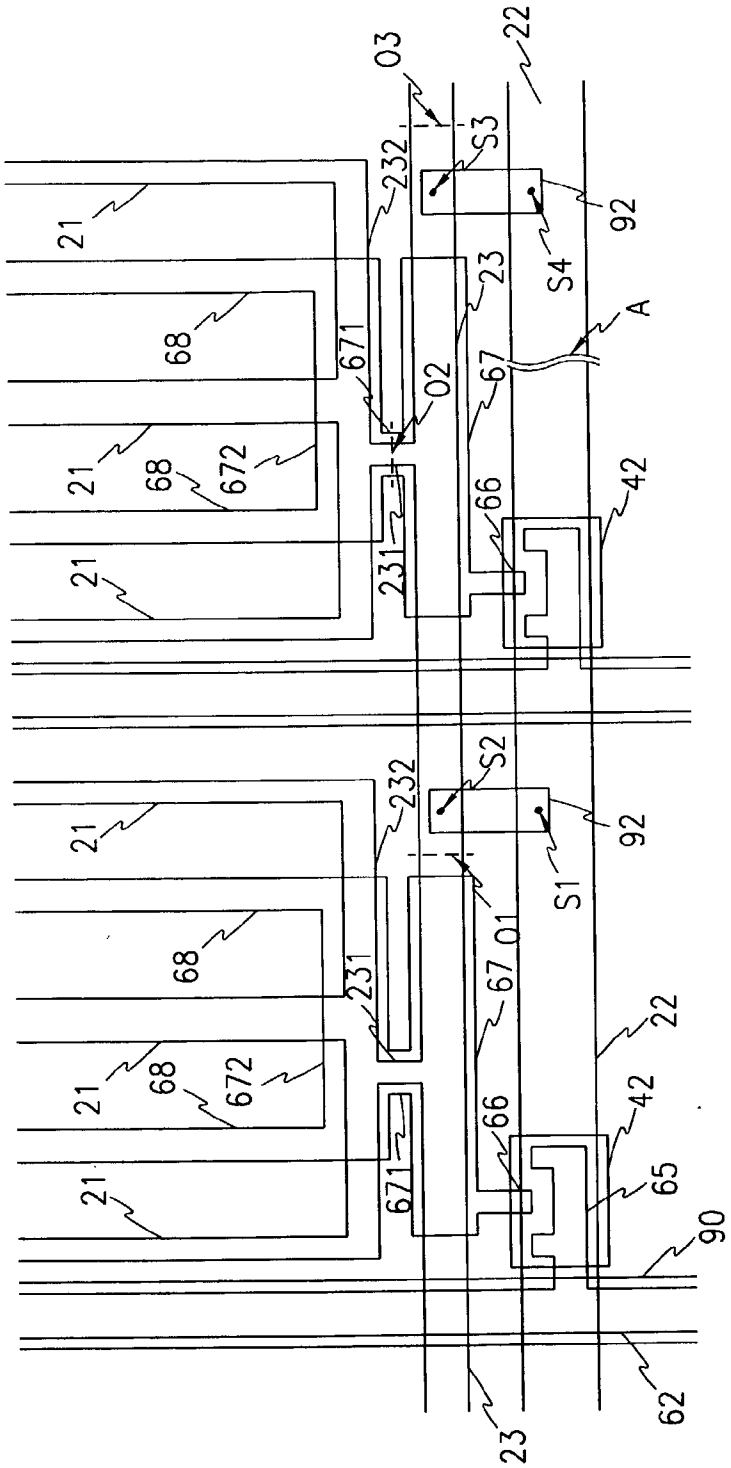
03
22
232
S3
92
21
S4
23
A
68
671
02
67
21
68
672
66
42
231
21
S2
232
92
21
S1
01
68
231
67
22
21
68
672
66
42
671
65
21
90
62
23

FIG. 14

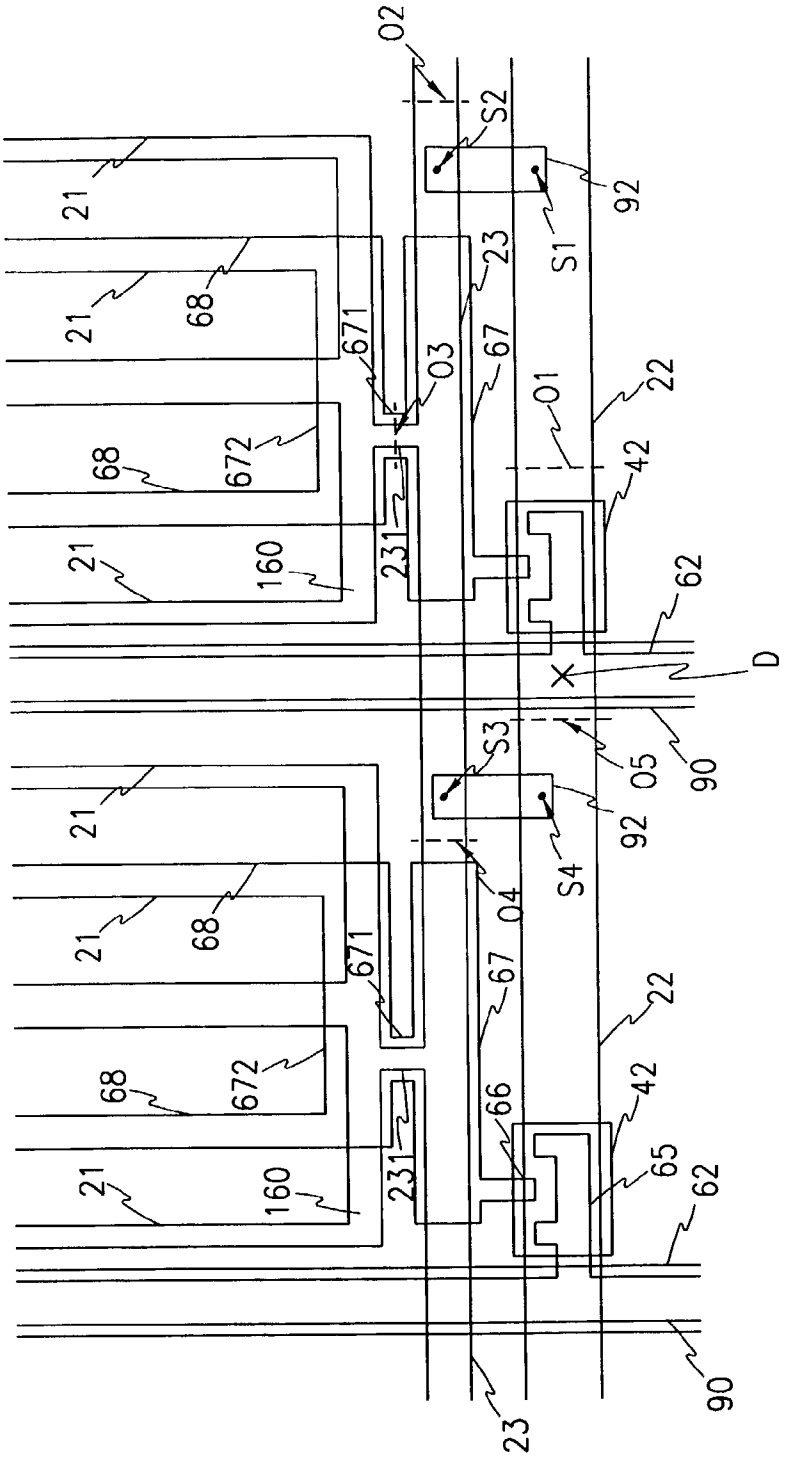
02
S2
92
S1
23
21
68
671
03
67
01
22
672
42
231
160
62
D
S3
05
90
92
S4
04
66
65
23

FIG. 15

THIN FILM TRANSISTOR ARRAY PANEL

BACKGROUND OF THE INVENTION

[0001] (a) Field of the Invention

[0002] The present invention relates to a thin film transistor array panel for a liquid crystal display and a method for manufacturing the same. More particularly, the present invention relates to a thin film transistor array panel for a liquid crystal display having wire structures that can repair data line or gate line open and short and a method for manufacturing the same.

[0003] (b) Description of the Related Art

[0004] Liquid crystal displays (LCDs) are one of the most widely used flat panel display (FPD) configurations. The liquid crystal display has two panels having electrodes for generating an electric field and a liquid crystal layer interposed between the two panels. The transmittance of incident light is controlled by the intensity of the electric field applied to the liquid crystal layer.

[0005] In the most widely used liquid crystal displays, field-generating electrodes are respectively formed on both of the panels, and one of the panels has switching elements such as thin film transistors.

[0006] A typical liquid crystal display uses a thin film transistor as a switching element. Data lines and gate lines, which cross each other and define pixels in a matrix array, are formed on the panel on which the thin film transistors are disposed. Further, a pixel electrode, which receives an image signal from the data lines through the thin film transistor and generates an electric field with a common electrode, is formed in each pixel.

[0007] In the thin film transistor array panel for a liquid crystal display, a storage electrode line is formed overlapping the pixel electrode via an insulating layer and provides storage capacitance along with the pixel electrode to improve the capacitance of a liquid crystal capacitor.

[0008] On the other hand, in the thin film transistor array panel for a liquid crystal display having a panel with pixel electrodes and common electrodes at the same panel and generating an electric field parallel to the panel, a common electrode line connected to the common electrodes and transmitting a common voltage works as a storage electrode line.

[0009] However, in manufacturing a thin film transistor array panel for a liquid crystal display, the gate lines and the data lines respectively connecting the output terminals of a integrated drive circuit to source and gate terminals of the thin film transistor tend to be damaged by open/short defects. These open/short defects are the main reasons that reduce the yields. Furthermore, costs to repair the open/short defect are expensive.

SUMMARY OF THE INVENTION

[0010] It is an object of the present invention to provide a thin film transistor panels for LCDs having a wire structure such that repairs of wire open/short defects are easy.

[0011] It is another object of the present invention to provide wire repair methods for easily repairing gate and data line open/short defects in an LCD manufacturing process.

[0012] These and other objects are provided, according to the present invention, by forming a redundant repair line one end of which overlaps the storage wire, and the other end of which overlaps the storage wire or the gate wire of a neighboring pixel column, and the redundant repair line is insulated from and overlaps the common electrode wire at one end and overlaps the gate wire or the storage wire of a neighboring pixel at the other end.

[0013] According to the present invention, a gate wire, including a plurality of gate lines formed in a certain direction, and a storage wire, including storage electrode lines formed in the same direction as the gate line, storage electrodes connected to the storage electrode lines and at least one of storage electrode connection portions connecting the storage electrodes of neighboring pixels, are formed. A data wire, including data lines formed in a direction approximately perpendicular to the gate wire and that are insulated from and intersecting the gate wire and the storage wire, is also formed. A redundant repair line that is insulated from and overlaps the storage wire at one end and overlaps the storage wire or the gate wire of neighboring pixel at the other end, is formed as well. A pixel electrode, formed in a pixel having a matrix array defined by the intersection of the gate lines and the data lines, forms a storage capacitor by overlapping the storage wire, and receives image signals through the data line.

[0014] Here, storage wire connection portions connecting the storage wires of neighboring pixel may be added.

[0015] At this time, the redundant repair lines may be formed by the same layer as the data wire. The storage wire connection portions may be formed by the same layer as the pixel electrode and the storage wires may be formed by the same layer as the gate wire.

[0016] In another embodiment according to the present invention, a plurality of gate lines including gate electrodes in a certain direction is formed on an insulating substrate. A common electrode) line is formed between two neighboring gate lines. A plurality of common electrodes electrically connected to the common electrode line is formed in a direction approximately perpendicular to the gate lines in a unit pixel. Additionally, a plurality of data wires in a direction approximately perpendicular to the gate lines and intersecting the gate lines are also formed. Furthermore, semiconductor layers on and insulated from the gate lines are formed, a plurality of source electrodes connected to the data line and extended on the semiconductor layers are formed as well, and a plurality of drain electrodes extended on the semiconductor layers opposite to the source electrodes and separated from the source electrodes are also formed. A plurality of pixel electrodes electrically connected to the drain electrodes and in parallel with the common electrodes are formed alternately with the common electrodes, and a redundant repair line simultaneously overlapping the common electrode lines and the gate lines is formed.

[0017] In a thin film transistor panel for liquid crystal display according to the present invention, if open/short defects of the gate lines or the data lines occur, the portions of the redundant repair line overlapping the gate wire, the data wire, the storage wire, or the common wire are shorted to repair the open/short defects.

BRIEF DESCRIPTION OF THE DRAWINGS

[0018] The accompanying drawings, which are incorporated in and constitute a part of the specification, illustrate an embodiment of the invention, and, together with the description, serve to explain the principle of the invention.

[0019] **FIG. 1** is a plane view of a thin film transistor array panel for a liquid crystal display according to an embodiment of the present invention.

[0020] **FIG. 2** is a layout view of a thin film transistor array panel for a liquid crystal display according to a first embodiment of the present invention.

[0021] **FIG. 3** is a cross-sectional view taken along line III-III' of **FIG. 2**.

[0022] **FIG. 4A** is a layout view showing a method for repairing an open of a gate line in a thin film transistor array panel for a liquid crystal display according to the first embodiment of the present invention.

[0023] **FIG. 4B** is a layout view showing a method for repairing an open of a data line in a thin film transistor array panel for a liquid crystal display according to the first embodiment of the present invention.

[0024] **FIG. 4C** is a layout view showing a method for repairing an open between a source electrode and a data line in a thin film transistor array panel for a liquid crystal display according to the first embodiment of the present invention.

[0025] **FIG. 5** is a layout view of a thin film transistor array panel for a liquid crystal display according to a second embodiment of the present invention.

[0026] **FIG. 6** is a cross-sectional view taken along line VI-VI' of **FIG. 5**.

[0027] **FIG. 7A** is a layout view showing a method for repairing an open of a gate line in a thin film transistor array panel for a liquid crystal display according to the second embodiment of the present invention.

[0028] **FIG. 7B** is a layout view showing a method for repairing an open of a data line in a thin film transistor array panel for a liquid crystal display according to the second embodiment of the present invention.

[0029] **FIG. 7C** is a layout view showing a method for repairing an open between a source electrode and a data line in a thin film transistor array panel for a liquid crystal display according to the second embodiment of the present invention.

[0030] **FIG. 8** is a layout view of a thin film transistor array panel for a liquid crystal display according to a third embodiment of the present invention.

[0031] **FIG. 9** is a cross-sectional view taken along line IX-IX' of **FIG. 8**.

[0032] **FIG. 10** is a layout view showing a method for repairing an open of a gate line in a thin film transistor array panel for a liquid crystal display according to the third embodiment of the present invention.

[0033] **FIG. 11** is a layout view showing a method for repairing a short between a data line and a gate line in a thin film transistor array panel for a liquid crystal display according to the third embodiment of the present invention.

[0034] **FIG. 12** is a layout view showing a first method for repairing an open defect of a data line in a thin film transistor array panel for a liquid crystal display according to the fourth embodiment of the present invention.

[0035] **FIG. 13** is a layout view showing a second method for repairing an open defect of a data line in a thin film transistor array panel for a liquid crystal display according to the fourth embodiment of the present invention.

[0036] **FIG. 14** is a layout view showing a method for repairing an open of a gate line in a thin film transistor array panel for a liquid crystal display according to the fifth embodiment of the present invention.

[0037] **FIG. 15** is a layout view showing a method for repairing a short between a data line and a gate line in a thin film transistor array panel for a liquid crystal display according to the fifth embodiment of the present invention.

DETAILED DESCRIPTION OF THE PREFERRED EMBODIMENTS

[0038] The present invention now will be described more fully hereinafter with reference to the accompanying drawings, in which preferred embodiments of the invention are shown. This invention may, however, be embodied in many different forms and should not be construed as limited to the embodiments set forth herein. In the drawings, the thickness of layers and regions are exaggerated for clarity. Like numerals refer to like elements throughout. It will be understood that when an element such as a layer, region, or substrate is referred to as being "on" another element, it can be directly on the other element or intervening elements may also be present. In contrast, when an element is referred to as being "directly on" another element, there are no intervening elements present.

[0039] **FIG. 1** is a plane view of a thin film transistor array panel for a liquid crystal display according to an embodiment of the present invention.

[0040] As shown in **FIG. 1**, in a thin film transistor array panel for a liquid crystal display according to an embodiment of the present invention, a plurality of gate lines **22** transmitting a scanning signal and a plurality of data lines **62** transmitting a display signal or an image signal cross each other. A plurality of pixels P defined by the gate lines **22** and the data lines **62** includes a thin film transistor TFT, a liquid crystal capacitor C_{LC} and a storage capacitor C_{ST}. A gate and a source of the thin film transistor TFT are connected to the gate line **22** and the data line **62**, respectively, and a drain of the thin film transistor TFT is connected to the one terminal of the liquid crystal capacitor C_{LC} and to the first terminal of the storage capacitor C_{ST}. The second terminal of the storage capacitor C_{ST} is connected to a storage electrode line **26** parallel to the gate line **22**. Here, a reference number D indicates an active region displaying an image and consisting of a group of the pixels P in a matrix. A plurality of repair ring lines **91** intersecting the gate lines **22** and the data lines **62** are formed about the perimeter of the active region D.

[0041] A unit pixel of the thin film transistor array panel according to the embodiment of the present invention will now be described in detail with reference to **FIGS. 2 and 3**.

[0042] **FIG. 2** is a layout view of a thin film transistor array panel for a liquid crystal display according to a first embodiment of the present invention and **FIG. 3** is a cross-sectional view taken along line III-III' of **FIG. 2**.

[0043] As shown in **FIGS. 2 and 3**, gate wires and storage wires of metal or conductive material such as aluminum (Al) or aluminum alloy, molybdenum (Mo) or molybdenum-tungsten (MoW), chromium (Cr), and tantalum (Ta) are formed on an insulating substrate **10**. A gate wire includes a gate line (or scanning signal line) **22** extending in the horizontal direction in **FIG. 1** and transmitting a scanning signal and a gate electrode **24** which is a part of the gate line and one terminal of a thin film transistor. The gate wire may include a gate pad connected to an end of the gate line **22** and transmitting a scanning signal from an external circuit to the gate line **22**. A storage wire includes a storage electrode line **26** formed parallel to the gate line **22**. It is provided with a voltage such as a common voltage applied to a common electrode (not shown) on an upper panel of the liquid crystal display. The storage wire also includes a storage electrode **28** extending in the vertical direction in **FIG. 1, a** storage electrode connection portion **27** connecting the storage wire of neighboring pixel row, and a wire repair portion **29** connected to an end of the storage electrode **28**. The storage wires **26, 27, 28**, and **29** of a neighboring pixel row are connected at three places including the two storage electrode connection portions **27** and the storage electrode line **26**, but may also be connected to the storage electrode connection portions **27** and the storage electrode line **26**. The storage wires **26, 27, 28**, and **29** form a storage capacitor (C_{ST} in **FIG. 1**) to provide storage capacitance along with a pixel electrode **82** which will be described later. Here, common voltage applied to the storage wire **26, 27, 28**, and **29** may be input through one pad along one direction of the storage electrode line **26**, or through a plurality of pads using both directions of the storage electrode line **26**.

[0044] The gate wire parts **22** and **24**, and storage wire parts **26, 27, 28**, and **29** may have a multiple-layered structure as well as a single-layered structure. When the gate wire parts **22** and **24**, and storage wire parts **26, 27, 28**, and **29** are formed of multiple layers, it is preferable that one layer is made of a material having a low resistivity and another layer is made of a material having good contacting properties with other materials, particularly ITO (indium tin oxide) for the pixel electrode. It is because the wire and the ITO used for the pixel electrode are used together to reinforce the pad portions electrically connected to the exterior.

[0045] A gate insulating layer **30** of silicon-nitride (SiNx) is formed on gate wire parts **22** and **24**, and storage wire parts **26, 27, 28**, and **29** and covers the same.

[0046] A semiconductor pattern **42** (made of a semiconductor such as hydrogenated amorphous silicon) is formed on the gate insulating layer **30**. Ohmic contact layer patterns **55** and **56** (made of such materials as amorphous silicon heavily doped with impurities like phosphorus) are formed on the semiconductor pattern **42**.

[0047] Source and drain electrodes **65** and **66**, made of conductive materials such as Mo or MoW, Cr, Al or Al alloy, and Ta, are formed on the ohmic contact layer patterns **55** and **56**. A data line **62** extending in the vertical direction on **FIG. 2**, connected to the source electrode **65**, and defining a pixel along with gate line **22** is formed on the gate insulating layer **30**. The data wire parts **62, 65**, and **66** may include a data pad connected to an end of data line **62**. The data pad transmits image signals from an external circuit to the data line **62**. Also, a redundant repair line **69** intersecting the gate line **22** of neighboring pixel column is formed in the vertical direction of **FIG. 2** on the gate insulating layer **30** with the same layer as the data wire parts **62, 65**, and **66**. One end of the redundant repair line **69** overlaps the storage wire **26**, and the other end of the redundant repair line **69** overlaps the wire repairing portion **29** of neighboring pixel column. The other end of the redundant repair line **69** may be extended to the gate line **22** of a neighboring pixel column.

[0048] The data wire parts **62, 65**, and **66**, and the redundant repair line **69** may have a multiple-layered structure like the gate wire parts **22** and **24**. Of course, when the data wire has a multiple-layered structure, it is preferable that one layer is made of a material having a low resistivity and another is made of a material having good contacting properties with other materials.

[0049] A passivation layer **72** is formed on the data wire parts **62, 65**, and **66**, and the semiconductor layer **42**, which is not covered by the data wire parts **62, 65**, and **66**. The passivation layer **72** has a contact hole **76** exposing the drain electrode **66**. The passivation layer **72** can be made of an insulating material such as SiNx, acrylic organic material, other transparent photo-definable material, or other organic material.

[0050] The pixel electrode **82** that receives an image signal and generates an electric field with a common electrode of an upper panel is formed on the passivation layer **72**. The pixel electrode **82** is made of a transparent conductive material such as indium tin oxide (ITO). Here, a storage wire connection portion connecting the neighboring storage wires **26, 27, 28**, and **29** through the contact hole of the passivation layer **72** and the gate insulating layer **30** may be formed with the same layer as the pixel electrode **82**, and will be described in detail with reference to the drawings.

[0051] In this structure according to the present invention, the redundant repair line **69** of the same layer as the data wire **62, 65**, and **66** may be formed with the same layer as the pixel electrode **82** on the passivation layer **72**, and the storage wire connection portion may be formed with the same layer as the redundant repair lines **69** on the gate insulating layer **30**. On the other hand, the passivation layer **72** may have contact holes respectively exposing the gate pad and the data pad. Hence, a redundant gate pad and a redundant data pad respectively connected to the gate pad and the data pad through the contact holes may be formed on the gate pad and the data pad with the same layer as the pixel electrode **82**.

[0052] A method for repairing open/short defects of the gate wire, the data wire, or the storage wire in a thin film transistor array panel according to an embodiment of the present invention will now be described in detail.

[0053] **FIG. 4A** is a layout view showing a method for repairing an open of a gate line in a thin film transistor array panel for a liquid crystal display according to the first embodiment of the present invention.

[0054] As shown in **FIG. 4A**, if the gate line **22** is severed at portion A, the S portions (●) overlapping a redundant

repair line **69**, the gate line **22** and the storage electrode line **26** on both sides of portion A are shorted using a laser. Accordingly, scanning signals transmitted to the severed gate line **22** are re-routed through the redundant repair line **69** and the storage electrode line **26**. At this time, the O portions (represented by dashed lines) of the storage electrode line **26** that are outside of both sides of the S portions got open to prevent scanning signals from being transmitted to all of the storage wires **26**, **27**, **28**, and **29**. Here, the storage electrode **28** between the O portions may also be severed, and signals, such as common voltage, that can be applied to the storage electrode line **26** are transmitted along both directions of the storage electrode line **26**. On the other hand, if the signals are transmitted from only one direction of the storage electrode line **26**, a storage redundant line **25** connecting the storage electrode **28** may be added as indicated in **FIG. 4A**.

[**0055**] **FIG. 4B** is a layout view showing a method for repairing an open of a data line in a thin film transistor array panel for a liquid crystal display according to the first embodiment of the present invention.

[**0056**] As shown in **FIG. 4**B, if the data line **62** is severed in portion B, the S portions (●) overlapping the storage wires **26** and **27**, and the data line **62** on the upper/lower sides of portion B are shorted using a laser. Accordingly, image signals transmitted to the severed data line **62** are re-routed through the storage wires **26** and **27**. Here, only the storage electrode line **26** and the storage electrode connection portion **27** can be used. However, when each pixel unit is formed with two storage electrode connection portions connecting the storage electrode **28** of the neighboring pixel, both of the two storage electrode connection portions can be used to repair the severed data line **62**. At this time, the O portions (represented by dashed lines) of the storage electrode line **26** neighboring the S portions got open to prevent image signals from being transmitted to all of the storage wires **26**, **27**, **28**, and **29**. Here, if two storage electrode connection portions **27** are used to repair the severed data line **62**, then signals applied to the storage electrode line **26** can be transmitted from one direction of the storage electrode line **26**. On the other hand, if the storage electrode line **26** is used to repair the severed data line **62**, it is preferable that signals applied to the storage electrode line **26** be transmitted from both directions of the storage electrode line **26**.

[**0057**] **FIG. 4C** is a layout view showing a method for repairing an open between a source electrode and a data line in a thin film transistor array panel for a liquid crystal display according to the first embodiment of the present invention.

[**0058**] As shown in **FIG. 4**C, if the source electrode **65** is severed from the data line **62** in portion C, the S portions (●) overlapping the storage electrode connection portions **27** and the data line **62** neighboring the portion C, and the S portions (●) overlapping the storage wires **26** and **29**, the redundant repair line **69**, and the data line **62** neighboring the portion C are shorted using a laser. Accordingly, image signals transmitted to the severed data line **62** are re-routed through the storage wires **26**, **27**, **28**, and **29**, and the redundant repair line **69**. At this time, the O portions (represented by dashed lines) of the storage electrode line **26** and **28** neighboring the S portions got open to prevent image signals from being transmitted to all of the storage wires **26**, **27**, **28**, and **29**. Here, signals applied to the storage electrode line **26** may be transmitted from both directions of the storage electrode line **26**.

[**0059**] A the thin film transistor array panel having a storage wire connection portion according to the embodiment of the present invention will now be described in detail.

[**0060**] **FIG. 5** is a layout view of a thin film transistor array panel for a liquid crystal display according to a second embodiment of the present invention, and **FIG. 6** is a cross-sectional view taken along line VI-VI' of **FIG. 5**.

[**0061**] As shown in **FIGS. 5 and 6**, the greater part of the structure is similar to that of the first embodiment.

[**0062**] However, both ends of a redundant repair line **69** respectively overlap a storage electrode line **26** and a gate line **22** of a neighboring pixel. Also, a gate insulating layer **30** and a passivation layer **72** have contact holes **78** exposing storage wires **26** and **29**, and a plurality of storage wire connection portions **88** connecting the neighboring storage wires **26**, **27**, **28**, and **29** of a pixel column through the contact holes **78** are formed with the same layer as a pixel electrode **82**.

[**0063**] In the thin film transistor panel for a liquid crystal display according to the second embodiment, because the neighboring storage wires **26**, **27**, **28**, and **29** are connected to each other, the distortions of signals applied to the neighboring storage wires **26**, **27**, **28**, and **29** may be minimized. Also, the thin film transistor panel according to the second embodiment may have one pad that receives signals applied to the storage wires **26**, **27**, **28**, and **29** from the outside.

[**0064**] **FIG. 7A** is a layout view showing a method for repairing an open of a gate line in a thin film transistor array panel for a liquid crystal display according to the second embodiment of the present invention.

[**0065**] As shown in **FIG. 7**A, if the gate line **22** is severed in portion A, the S portions (●) overlapping the redundant repair line **69**, the gate line **22** and the storage electrode line **26** on both sides of portion A are shorted using a laser. Accordingly, scanning signals transmitted to the severed gate line **22** are re-routed through the redundant repair line **69** and the storage electrode line **26**. At this time, the O portions (represented by dashed lines) of the storage electrode line **26**, **28**, and **29** neighboring the S portions got open to prevent scanning signals from being transmitted to all of the storage wires **26**, **27**, **28**, and **29**. Here, because all of the storage wires **26**, **27**, **28**, and **29** are connected to each other through the storage wire connection portion **88**, the O portions of the storage electrode **28** between the S portions must be severed to divide the storage electrode **28** from the rest of the storage line **28**.

[**0066**] **FIG. 7B** is a layout view showing a method for repairing an open of a data line in a thin film transistor array panel for a liquid crystal display according to the second embodiment of the present invention.

[**0067**] As shown in **FIG. 7**B, if the data line **62** is severed in portion B, the S portions (●) overlapping the storage wires **26** and **27**, and the data line **62** on the upper/lower sides of portion B are shorted using a laser. Accordingly,

image signals transmitted to the severed data line **62** are re-routed through the storage wires **26** and **27**. At this time, the O portions (represented by dashed lines) of the storage electrode line **26** and the storage electrode **28** neighboring the S portions got open to prevent image signals from being transmitted to all of the storage wires **26**, **27**, **28**, and **29**.

[**0068**] **FIG. 7C** is a layout view showing a method for repairing an open between a source electrode and a data line in a thin film transistor array panel for a liquid crystal display according to the second embodiment of the present invention.

[**0069**] As shown in **FIG. 7**C, if the source electrode **65** is severed from the data line **62** in portion C, the S portions (●) overlapping the storage electrode connection portions **27**, the storage electrode line **26**, and the data line **62** neighboring the portion C are shorted using a laser. Accordingly, image signals transmitted to the severed data line **62** are re-routed through the storage wires **26**, **27**, and **29**, and the storage wire connection portion **88**. At this time, the O portions (represented by dashed lines) of the storage wires **26** and **28** neighboring the S portions got open to prevent image signals from being transmitted to all of the storage wires **26**, **27**, **28** and **29**.

[**0070**] In these embodiments, transparent ITO is taken as an example of the material of the pixel electrode **82**, but an opaque-conductive material may also be used in a reflective type liquid crystal display.

[**0071**] Next, a method for repairing a thin film transistor panel for a liquid crystal display whose pixel electrodes and common electrodes are formed in a single substrate and whose liquid crystal molecules are controlled by an electric field nearly parallel to the substrate will be described in detail with reference to drawings.

[**0072**] First, the structure of the thin film transistor panels for a liquid crystal display according to the third embodiment will be described.

[**0073**] **FIG. 8** is a layout view of a thin film transistor array panel for a liquid crystal display according to a third embodiment of the present invention, and **FIG. 9** is a cross-sectional view taken along line IX-IX' of **FIG. 8**.

[**0074**] As shown in **FIGS. 8 and 9**, a gate line (scanning signal line) **22**, and a gate electrode **24** are formed on an insulating substrate **10**, dual common lines **23** parallel to the gate lines **22** are formed between the two gate lines **22**, and a plurality of common electrodes **21** connecting the dual common electrode lines **23** are formed in the horizontal direction in **FIG. 8**.

[**0075**] A gate insulating layer pattern **30** of silicon-nitride (SiNx) is formed on the gate wires **22** and **24**, the common electrode line **23**, and the common electrode **21**.

[**0076**] A plurality of redundant data lines **90** extending in the vertical direction in **FIG. 8** and defining unit pixel along with the gate lines **22** are formed on the gate insulating layer **30**. The each unit pixel includes at least two common electrodes **21**, and the common electrodes **21** located at the outer area of unit pixel are adjacent to the redundant data line **90**. Also, a plurality of redundant repair lines **92** overlapping the gate line **22**, and one or two of the common electrode lines **23** neighboring the gate lines **22** are formed on the gate insulating layer **30**. The redundant repair lines **92** are formed one by one in a unit pixel, and are made of the same material as the redundant data lines **90**.

[**0077**] The redundant data line **90**, and the redundant repair lines **92** are covered by an interlayer insulating layer **100**.

[**0078**] A semiconductor layer **42**, a data line **62**, a source electrode **65**, a drain electrode **66**, a pixel electrode line **67**, and a pixel electrode **68** are formed on the interlayer insulating layer **100**. The semiconductor layer **42** is located on the gate electrode **24**. The data line **62**, extending in the vertical direction in **FIG. 8** and connected to the redundant data line **90** through a contact hole **102** of the interlayer insulating layer **100**, is located on the redundant data line **90**. A source electrode **65** overlaps a portion of the semiconductor layer **42**. A drain electrode **66** located opposite to the source electrode **65** with respect to the gate electrode **24** and separated from the source electrode **65** overlaps a portion of the semiconductor layer **42**. Ohmic contact layers **55** and **56** are formed between the source electrode **65** and the drain electrode **66** and the semiconductor layer **42** in order to improve the contact characteristics between them. A pixel electrode line **67** is extended in the horizontal direction in **FIG. 8** from the drain electrode **66**, and overlaps the common electrode line **23** to form a storage capacitor between them. A pixel electrode **68** is extended in the vertical direction in **FIG. 8**, and is alternately located along with the common electrodes **21** to apply electric fields that are nearly parallel to the substrate **10**.

[**0079**] As described above, in the thin film transistor panel for the liquid crystal display according to the third embodiment, the redundant repair lines **92** simultaneously overlap the gate lines **22** and the common electrode lines **23** with the gate insulating layer **30** interposed therebetween. It may be formed of the same layer as the data line **62**.

[**0080**] These redundant repair lines **92** are used to repair opens of the gate lines **22** and the data lines **62**, as well as shorts between them.

[**0081**] **FIG. 10** is a layout view showing a method for repairing an open of a gate line in a thin film transistor array panel for a liquid crystal display according to the third embodiment of the present invention.

[**0082**] As shown in **FIG. 10**, if the gate line **22** is severed in portion A, the gate line **22**, the common electrode line **23**, and the S1, S2, S3, and S4 portions overlapping the redundant repair lines **92** located on both sides of the portion A are shorted using a laser. Next, the O1 and O5 portions of the common electrode line **23** on the respective left and the right sides of the S2 and S3 portions are disconnected, and O2, O3, and O4 portions of the common electrodes **21** connected to the common electrode line **23** between the two O1 and O5 portions are disconnected in order to separate the common electrodes **21** from the common electrode line **23**.

[**0083**] Accordingly, by isolating the portion of the common electrode line **23** and shorting the isolated portion of the common electrode line **23**, the severed gate line **22**, and the redundant repair line **92**, scanning signals transmitted to the severed gate line **22** are re-routed through the redundant repair line **92** and the common electrode line **23**. At this time, because one of the dual common electrode lines **23** is used, the common voltage is transmitted through the other of the dual common electrode lines **23** that is not used to repair the severed gate line **22**.

[0084] Next, a method for repairing short between the gate line **22** and the data line **62** is described with reference to **FIG. 11**.

[0085] **FIG. 11** is a layout view showing a method for repairing a short between a gate line and a data line in a thin film transistor array panel for a liquid crystal display according to the third embodiment of the present invention.

[0086] As shown in **FIG. 11**, if the portion overlapping the gate line **22**, and the data line **62** or the redundant data line **92** is shorted at the D portion (x), the S1, S2, S3 and S4 portions (●) overlapping the redundant repair lines **92** located at both sides of the portion D, and the gate line **22** and the common electrode line **23** can be shorted using a laser with a method similar to the above described method for repairing the severed gate line **22**. At this time, the O2 and O6 portions of the common electrode line **23**, which are respectively located at the left and right sides of the left and right redundant repair lines **92** in **FIG. 11**, and the O3, O4, and O5 portion of the common electrodes **21**, connected to the common electrode line **23** between the O2 and O6 portions, are opened. Then, two O7 portions of the gate line **22** between the shorted data line **62** and the two redundant repair lines **92** are cut to prevent an image signal of the shorted data line **62** from being transmitted to the gate line **22**. The O8 portion is also cut on the pixel electrode **68** that connects the pixel electrode line **67** in the corresponding pixel.

[0087] In this way, by isolating the portion of the common electrode line **23**, shorting the isolated portion of the common electrode line **23**, and the shorted gate line **22** using the redundant repair line **92**, and disconnecting the shorted gate line **22** between the shorted data line **62** and the redundant repair line **92**, an image signal transmitted to the shorted data line **62** is transmitted without an interference from the scanning signals, and scanning signals transmitted to the shorted gate line **22** are re-routed around the shorted portion D through the S1, S2, S3 and S4 portions.

[0088] As shown in **FIGS. 12 and 13**, a change in the structure of the redundant repair line according to the third embodiment of the present invention may repair the open defects of the data line more easily.

[0089] **FIG. 12** is a layout view showing a first method for repairing an open defect of a data line in a thin film transistor array panel for a liquid crystal display according to the fourth embodiment of the present invention.

[0090] As shown in **FIG. 12**, the redundant repair line **220** overlaps the two common electrode lines **23** neighboring the upper and lower sides of the gate line **22**. If the portion B of the data line **62** between the two common electrode lines **23** overlapped by the redundant repair line **220** is severed, then the S1 and S2 portions overlapping the data line **62** and the common electrode lines **23** at the upper and lower sides of the opened portion B of the data line **62**, and the S3, S4, S5, and S6 portions lying on top of the common electrode line **23** and the redundant repair lines **220** located in **FIG. 12** at the left and the right sides of the portion B are shorted using a laser. Next, the O2 and O3 portions on the common electrode line **23** at left side in **FIG. 12** of the redundant repair line **220** located at left side of the opened portion B, and the O7 and O8 portions on the common electrode line **23** at right side in **FIG. 12** of the redundant repair line **220** located at right side of the opened portion B are disconnected. The O1, O4, O5, O6, O9 and O11 portions of the common electrodes **21** connected to the common lines **23** and neighboring the common electrode line **23** are disconnected.

[0091] In this way, by shorting the data wires **62** and **90** and the common electrode line **23** at the upper and lower sides of the disconnected portion B, and by shorting the isolated common electrode line **23** and the redundant repair line **92**, an image signal transmitted to the disconnected data line **62** is re-routed through the S1, S2, S3, S4, S5, and S6 portions and is passed by the common electrode lines **23** and the redundant repair lines **220** in order to transmit an image signal to the lower side of the disconnected data line **62**.

[0092] **FIG. 13** is a layout view showing a second method for repairing an open defect of a data line in a thin film transistor array panel for a liquid crystal display according to the fourth embodiment of the present invention.

[0093] As shown in **FIG. 13**, if the portion B of the data line **62** or the redundant data line **90** between the two common electrodes **21** of two neighboring pixels is severed, the S1 and S2 (●) portions, overlapping the data line **62** and the redundant data line **90** as well as the common electrode lines **23** at the upper and lower sides of the opened portion B of the data line **62**, are shorted using a laser. Additionally, the O1, O2, O3, and O4 portions of the two common electrode lines **23** located at the left and the right sides in **FIG. 13** of the shorted S1 and S2 portions are disconnected.

[0094] When disconnecting the common electrode lines **23**, it is desirable to disconnect the common electrode line **23** at point O3 and O4 that are closest to the data line **62**. It is because such a cut would preserve the most of the common electrode in the neighboring pixel. Also, to transmit common voltages to the common electrode line **23** and the common electrodes **21** to the right side of the disconnected portion B in **FIG. 13**, the S3 and S4 portions overlapping the redundant repair lines **220** and the common electrode line **23** are shorted.

[0095] In this way, by shorting the data wires **62** and **90** and the common electrode line **23** at the upper and lower sides of the disconnected portion B, and forming the path transmitting an image signal by using the common electrode lines **23** or the common electrode **21**, the image signal transmitted to the disconnected data line **62** is transmitted to the data line **62** under the lower portion of the disconnected portion B.

[0096] Next, the fifth embodiment according to the present invention to improve operational yields by minimizing the number of disconnects using a laser when repairing will be described with reference to **FIGS. 14 and 15**.

[0097] **FIG. 14** is a layout view showing a method for repairing an open of a gate line in a thin film transistor array panel for a liquid crystal display according to the fifth embodiment of the present invention.

[0098] As shown in **FIG. 14**, in the film transistor panel according to the fifth embodiment of the present invention, a gate line **22**, a redundant data line **90**, a source electrode **65**, a data line **62**, a semiconductor layer **42**, and a drain electrode **66** are formed as described in the embodiments

above. However, the structures of the common wire and the pixel wire are different from that of the third and the fourth embodiments.

[0099] Dual common electrode lines **23** parallel to the gate line **22** are formed as in the above embodiments, a first connection portion **231** is extended from the common electrode **23**, and a sub common electrode line **232** is connected to the first connection portion **231**. Also, a plurality of common electrodes **21** are extended approximately perpendicularly from the sub common electrode line **232**.

[0100] A pixel electrode line **67** extended from a drain electrode **66** overlaps the common electrode line **23** as in the above embodiments, and a second connection portion **671** extended from the pixel electrode line **67** overlaps the first connection portion **231**. A sub pixel electrode line **672** connected to the second connection portion **671** and overlapping the sub common electrode line **232** is formed parallel to the first connection portion **231**. Additionally, a plurality of pixel electrodes **68** are extended from the sub pixel electrode line **67** perpendicular to the sub pixel electrode line **672**.

[0101] Also, redundant repair line **92** overlaps the gate line **22** and the common electrode line **23** neighboring the gate line **22**, and is formed of the same layer as the data line **62** or the redundant data line **90**.

[0102] In the wire structure according to the fifth embodiment as shown in **FIG. 14**, if the gate line **22** is severed in portion A, the gate line **22**, the common electrode line **23**, and the S1, S2, S3, and S4 portions overlapping the redundant repair lines **92** located at both sides of the portion A are shorted using a laser. Next, the left and the right O1 and O3 portions of the common electrode line **23** neighboring the S2 and S3 portions got open, respectively. Also, the O2 portion of the first and the second connection portions **231** and **671** is disconnected to prevent a scanning signal from being transmitted to the common electrodes **21**.

[0103] In this way, because the plurality of the common electrodes **21** and the pixel electrode **68** are disconnected at once by disconnecting the first and the second connection portions **231** and **671** in the method according to the fifth embodiment, the number of disconnects may be reduced to one fourth or to one fifth.

[0104] **FIG. 15** is a layout view showing a method for repairing a short between a data line and a gate line in a thin film transistor array panel for a liquid crystal display according to the fifth embodiment of the present invention.

[0105] As shown in **FIG. 15**, if the portion overlapping the gate line **22** and the data wire **62**, **65**, and **92** is shorted at portion D, then the O1 and O5 portions of the gate line **22** on both sides of the portion D are disconnected to prevent an image signal from being transmitted to the gate line **22** through the short portion D, as in the above embodiment. The S1, S2, S3, and S4 portions overlapping the redundant repair lines **92** located at both sides of the portion D, along with the gate line **22** and the common electrode line **23**, are shorted by using a laser. Next, the O4 and O2 portions of the common electrode line **23**, which are respectively located at left and right sides of the left and right redundant repair lines **92** in **FIG. 15** are disconnected. Also, the O3 portion of the first and the second connection portions **231** and **671** is disconnected.

[0106] Just as in the method of repairing an open gate line, because the plurality of the common electrodes **21** and the pixel electrode **68** are disconnected at once by disconnecting the first and the second connection portions **231** and **671** in the method according to the fifth embodiment, the number of disconnects may be reduced to about a quarter or to one fifth, improving the productivity in defect repair.

[0107] In the present invention, by forming a redundant repair line overlapping the gate line, the storage electrode line, or the common electrode line, open/short defects of the gate line and the data line may be easily repaired. Additionally, by forming a storage wire connection portion connecting the storage electrode lines of neighboring pixel, the distortions of signals transmitted to the storage electrode line may also be minimized.

[0108] In the drawings and specification, there have been disclosed typical preferred embodiments of the present invention and, although specific terms are employed, they are used in a generic and descriptive sense only and not for purposes of limitation, the scope of the invention being set forth in the following claims.

What is claimed is:

1. A thin film transistor array panel for a liquid crystal display, comprising:

a gate wire including gate lines formed in a horizontal direction;

a storage wire including storage electrode lines formed in the same direction as the gate lines, storage electrodes connected to the storage electrode lines, and at least one storage electrode connection portion connecting the storage electrodes of a neighboring pixel;

a data wire including data lines formed in a vertical direction, wherein said data wire intersects and is insulated from said storage wire and said gate wire;

a pixel electrode formed in a pixel defined by an intersection of the gate line and the data line, wherein said pixel electrode forms a storage capacitor by overlapping the storage wire, and receives image signals through the data line; and

a redundant repair line that overlaps and is insulated from the storage wire at one end and overlaps the storage wire or the gate wire of a neighboring pixel at the other end.

2. The thin film transistor array panel of claim 1, further comprising a storage wire connection portion connecting storage wires of neighboring pixels.

3. The thin film transistor array panel of claim 2, wherein the storage wire connection portion is formed of the same layer as said pixel electrode.

4. The thin film transistor array panel of claim 1, wherein said redundant repair line is formed of the same layer as said data wire.

5. The thin film transistor array panels of claim 1, wherein said storage wires are formed of the same layer as said gate wire.

6. A thin film transistor array panel for a liquid crystal display, comprising:

an insulating substrate;

a gate wire formed on the insulating substrate, wherein said gate wire includes a gate line formed in a horizontal direction and transmitting a scanning signal, and a gate electrode connected to the gate line;

a storage wire formed on the insulating substrate, wherein said storage wire includes a storage electrode line formed in a direction parallel to the gate line, a storage electrode connected to the storage electrode line, and at least one storage electrode connection portion connecting storage electrodes of neighboring pixels;

a gate insulating layer covering said gate wire and said storage wire;

a semiconductor layer formed on the gate insulating layer and made of semiconductor material;

a data wire including a data line formed in a vertical direction, a source electrode connected to the data line and extended on the semiconductor layer, and a drain electrode extended on the semiconductor layer and separated from the source electrode with respect to the gate electrode, wherein the data line defines a pixel by intersecting the gate line;

a redundant repair line on said gate insulating layer that is insulated from the storage wire at one end and that overlaps said storage wire or said gate wire of a neighboring pixel at the other end;

a passivation layer covering said data wire and said redundant repair line; and

a pixel electrode electrically connected to the drain electrode through the first contact hole.

7. The thin film transistor array panel of claim 6, wherein data wire is formed on said gate insulating layer.

8. The thin film transistor array panel of claim 7, wherein said pixel electrode is formed on said passivation layer and connected to the drain electrode through a contact hole of said passivation layer.

9. The thin film transistor array panel of claim 6, further comprising a storage wire connection portion formed on said passivation layer,

wherein the storage wire connection portion connects the storage wires of neighboring pixels through a contact hole of the passivation layer and the gate insulating layer.

10. A method for repairing a severed gate wire of a thin film transistor array panel for a liquid crystal display, wherein the thin film transistor array panel for a liquid crystal display has a gate wire including a gate line formed in a particular direction, a storage wire including a storage electrode line formed in the same direction as the gate line, a storage electrode connected to the storage electrode line and at least one of storage electrode connection portions connecting storage electrodes of neighboring pixels, a data wire including a data line formed in a direction approximately perpendicular to the gate line and intersecting while insulated from the gate wire and the storage wire, a pixel electrode formed in a pixel defined by the intersection of the gate line and the data line, forming a storage capacitor by overlapping the storage wire, and receiving image signals through the data line, and a redundant repair line that overlaps and is insulated from the storage wire at one end and overlaps the storage wire or the gate wire of a neighboring pixel at the other end, comprising the steps of:

shorting the severed gate line and the storage wire and the redundant repair lines overlapping the severed gate line and the storage wire.

11. A method for repairing a severed data wire of a thin film transistor array panel for a liquid crystal display, wherein the thin film transistor array panel for a liquid crystal display has a gate wire including a gate line formed in a particular direction, a storage wire including a storage electrode line formed in the same direction as the gate line, a storage electrode connected to the storage electrode line and at least one of storage electrode connection portions connecting storage electrodes of neighboring pixels, a data wire including a data line formed in a direction approximately perpendicular to the gate lines and intersecting while insulated from the gate wire and the storage wire, a pixel electrode formed in a pixel defined by the intersection of the gate line and the data line, forming a storage capacitor by overlapping the storage wire, and receiving image signals through the data line, and a redundant repair line that overlaps and is insulated from the storage wire at one end and overlaps the storage wire or the gate wire of a neighboring pixel at the other end, comprising the steps of:

shorting the severed data line and the storage wire overlapping the severed data line.

12. A method for repairing a data wire of a thin film transistor array panel for a liquid crystal display when a source electrode is severed from the data line, wherein the thin film transistor array panel for a liquid crystal display having a gate wire including a gate line formed in a particular direction, a storage wire including a storage electrode line formed in the same direction as the gate line, a storage electrode connected to the storage electrode line and at least one of storage electrode connection portions connecting storage electrodes of neighboring pixels, a data wire including a data line formed in a direction approximately perpendicular to the gate line and intersecting while insulated from the gate wire and the storage wire, a pixel electrode formed in a pixel defined by intersection of the gate line and the data line, forming a storage capacitor by overlapping the storage wire, and receiving image signals through the data line, and a redundant repair line that overlaps and is insulated from the storage wire at one end, and overlaps the storage wire or the gate wire of a neighboring pixel at the other end, comprising, the steps of:

shorting the storage wire and the redundant repair line neighboring the severed source electrode; and

shorting the shorted storage wire and the severed data line.

13. A method for repairing wires of a thin film transistor array panel for a liquid crystal display when a source electrode is severed from a data line,

wherein the thin film transistor array panel for a liquid crystal display has a gate wire including a gate line formed in a particular direction, a storage wire including a storage electrode line formed in the same direction as the gate line, a storage electrode connected to the storage electrode line and at least one of storage electrode connection portions connecting storage electrodes of neighboring pixels, a data wire including a data line formed in a direction approximately perpendicular to and intersecting while insulated from the gate wire and the storage wire, a pixel electrode formed in a pixel defined by intersection of the gate line and the data line, forming a storage capacitor by overlapping the storage wire, and receiving image signals through

the data line, a redundant repair line that overlaps and is insulated from the storage wire at one end and overlaps a storage wire or a gate wire of a neighboring pixel at the other end, and a storage wire connection portion connecting storage wires of a neighboring pixel column, comprising the steps of:

shorting the storage wire neighboring the severed source electrode and the severed data line.

14. A thin film transistor array panel for a liquid crystal display, comprising:

an insulating substrate;

a gate line formed on said insulating substrate in a horizonal direction and including a gate electrode;

a common electrode line formed between two neighboring gate lines;

a common electrode electrically connected to said common electrode line and formed in a vertical direction;

a data wire formed in a vertical direction and intersecting said gate line;

a semiconductor layer on and insulated from said gate line;

a source electrode connected to said data wire and extended on said semiconductor layer;

a drain electrode extended on said semiconductor layer and separated from source electrode;

a pixel electrode electrically connected to said drain electrode and formed in parallel and alternately with the common electrodes; and

a redundant repair line simultaneously overlapping said common electrode line and said gate line.

15. The thin film transistor array panel of claim 14, wherein said common electrode line is formed in duplicate, and said redundant repair line overlaps one of the duplicate common electrode lines.

16. The thin film transistor array panel of claim 14, wherein said common electrode line has duplicate wires including a first wire and a second wire, and said redundant repair line simultaneously overlaps the first wire and the second wire located at both sides of said gate line.

17. The thin film transistor array panel of claim 14, further comprising a first connection portion extended to said common electrode line, a sub common electrode line connecting said common electrode as one body and connected to the first connection portion, a pixel electrode line extended from the drain electrode and overlapping said common electrode line, a second connection portion extended from the pixel electrode line and overlapping the first connection portion, and a sub pixel electrode line connecting said pixel electrode as one body and overlapping the sub common electrode line.

18. The thin film transistor array panel of claim 14, wherein said data wire includes a redundant data line, and a data line connected through a contact hole of an interlayer insulating layer formed between the data line and the redundant data line.

19. The thin film transistor array panel of claim 18, wherein the redundant repair line is formed of the same layer as the redundant data line.

20. The thin film transistor array panel of claim 18, wherein the redundant repair line is formed of the same layer as the data line.

* * * * *