June 16, 1959 W. C. ELMORE 2,891,180

SUPPORT FOR VIBRATORY DEVICES

Filed Aug. 19, 1957 2 Sheets-Sheet 1

FIG. 1

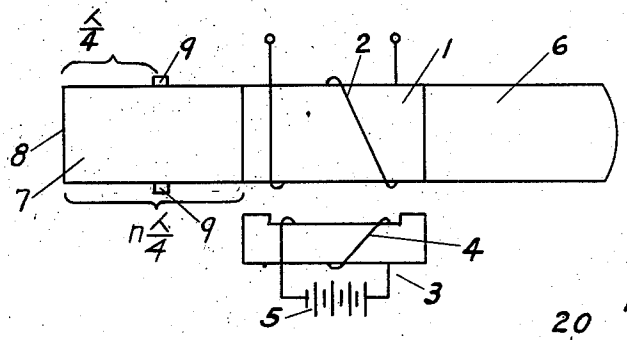

FIG. 2

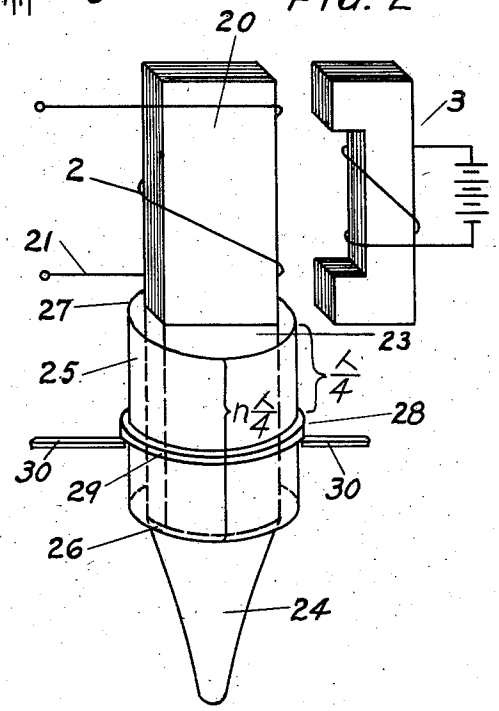

FIG. 3

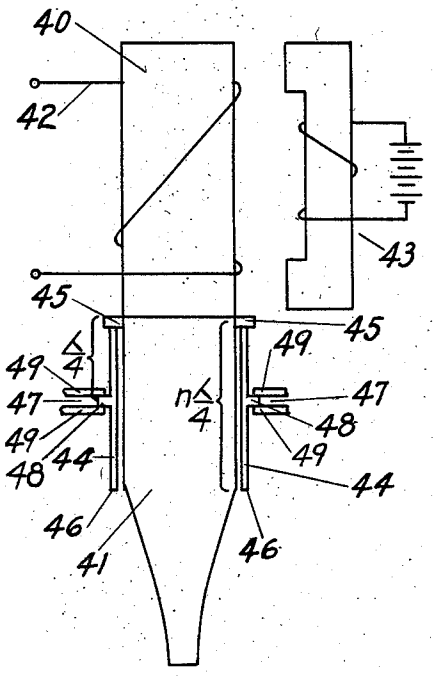

June 16, 1959 W. C. ELMORE 2,891,180

SUPPORT FOR VIBRATORY DEVICES

Filed Aug. 19, 1957 2 Sheets-Sheet 2

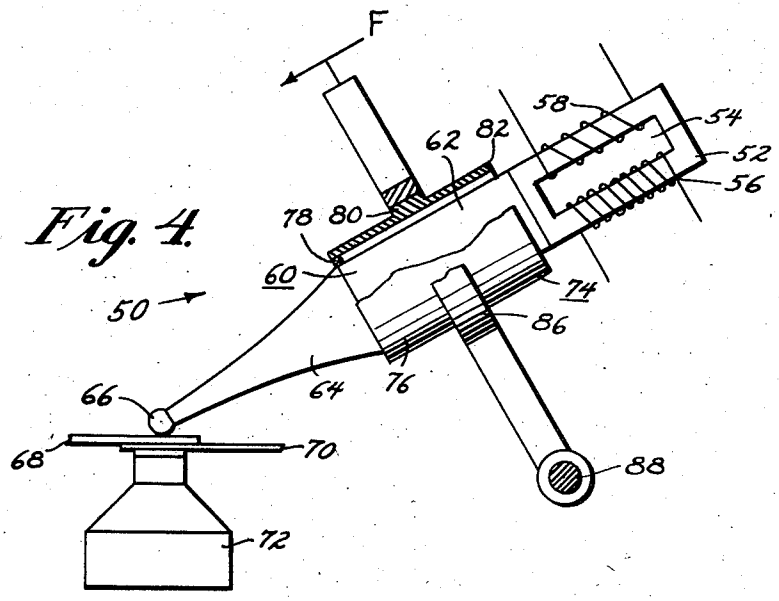

Fig. 4.

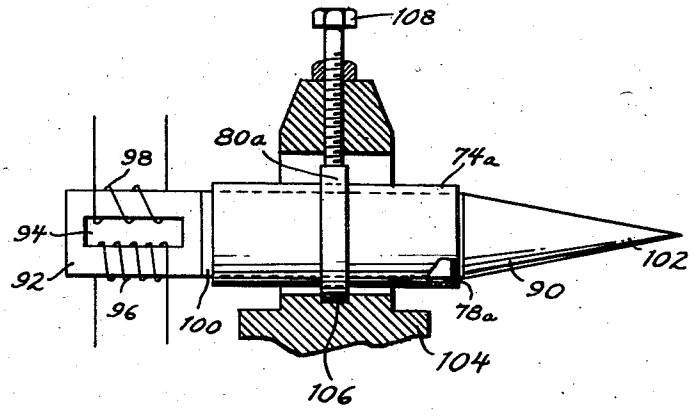

Fig. 5.

INVENTOR.
WILLIAM C. ELMORE
BY
Arthur H. Seidel
ATTORNEY.

United States Patent Office 2,891,180
Patented June 16, 1959

2,891,180

SUPPORT FOR VIBRATORY DEVICES

William C. Elmore, Media, Pa., assignor to Aeroprojects, Inc., West Chester, Pa., a corporation of Pennsylvania

Application August 19, 1957, Serial No. 679,041

31 Claims. (Cl. 310—26)

This invention relates to a support for vibratory devices and to vibratory devices comprising such supports, and more particularly, to a support for vibratory devices used in sonic and ultrasonic operations in which the loss of energy from the devices by absorption and the like is minimized.

Vibratory devices delivering sound energy have been widely used experimentally and industrially to perform various operations such as soldering, drilling, welding, machining, mixing, homogenizing, emulsifying, sterilizing, and the like. In general, these devices comprise a source of alternating electrical current, a transducer for converting the electrical current into mechanical oscillations and a coupler for conducting the vibratory energy developed by the transducer to a desired area. The coupler may also perform the added function of concentrating or diffusing the vibratory energy and of matching impedance between the transducer and the work. For operating purposes, these devices are generally supported in mounts of soft material, by rigid mechanical type mounts, on diaphragms, etc. In operation, the device is excited and the developed vibratory energy is transmitted through the device to the area being worked upon.

When the vibratory energy is being continuously transmitted by the device, part of the energy is reflected by boundaries such as interfaces, associated with changes in the speed of sound in the materials used. As a result thereof, standing wave patterns are established. When such standing wave patterns are established, certain sections of the vibratory device have zones of minimum motion, called nodes, which recur at one-half wavelength intervals. Other sections of the device have zones of maximum motion, called antinodes or loops, which also recur at one-half wavelength intervals and at a distance of one-quarter wavelength from an adjacent node. Since minimum motion of the vibratory device occurs at nodes, it has been considered desirable with prior devices to support such devices at these parts at which nodes are established to minimize energy losses by absorption.

However, a standing wave pattern exists only on an unloaded or partially loaded vibratory device, i.e. true nodes do not exist on one which is delivering essentially all of its power. In a condition of perfect matching of the load to the vibratory device, which is desirable for maximum utilization of the energy developed, the standing wave patterns characteristic of an unloaded or partially loaded system are not established. Under these circumstances, all of the energy developed by the device is absorbed and none is reflected from the work face back along the device to cause standing wave patterns. Therefore, if the vibratory device is supported by inelastic or semi-elastic attachments, the transmission characteristics of the device are altered and some of the energy is absorbed.

Even when perfect matching of the load is not achieved, for example when one-half of the available energy of the vibratory device is being delivered so that standing wave patterns and nodal zones will exist in the coupler, the

nodal zones will still have vibratory amplitude requisite for passage of the delivered half of the energy. If inelastic or semi-elastic attachments are made to the vibratory device, the energy delivered will be reduced still further, even if the attachments are positioned at the so-called nodal zones.

When a vibratory device has a free end, i.e. an end which is not delivering energy, a node will exist, one-quarter wavelength from the free end or at odd multiples of one-quarter wavelength from a free end if the device is longer.

I have discovered that by providing vibratory devices with a resonant member a unit multiple of one-half wavelength long according to the properties of the material of which the resonant member is made and the operating frequency, and having a free end, true standing wave patterns are set up in the resonant member, thus establishing a true node at which the devices can be supported, thereby minimizing losses by absorption of the vibratory energy developed by the device. This permits maximum energy output to the work area instead of complicating energy transmission. The support is simple and inexpensive to make and install and does not restrict the action of the apparatus. It does not require or preclude supporting the device rigidly and permits the device to be applied with force to the area being worked on, as required for drilling, welding, soldering, machining, extrusion, and other heavy-duty applications. The avoidance of energy losses by absorption analogous to leakage, permits the device of the present invention to have special utility for mixing, homogenizing, emulsifying, sterilizing and like operations.

The foregoing supports and vibratory devices including such supports comprise for the support a resonant member one-half wavelength long or unit multiples of one-half wavelength long according to the properties of the material of which the support is made and the operating frequency of the vibratory device with which the support is engaged. Such supports have a node one-quarter wavelength from the free end of the support, or odd multiples of one-quarter wavelength from the free end of the support, with the other end of the support secured to the unit being supported.

I have found that such supports render the vibratory device with which they are associated essentially force-insensitive regardless of the location on the vibratory device at which the support is secured, i.e. the vibratory device which is so-supported may be applied to a work area with force and under a load without a significant shift in frequency of the device resulting from the load. While tests have indicated that the position of this support in the acoustical system is not critical, and there may be occasions for placing it at other positions in the system such as at a nodal zone, practical requirements indicate the desirability of securing the support to the vibratory device at an antinode or loop, which is a zone of minimum stress, or as near to such an antinode or loop as possible.

Generally, the support is equivalent to one-half wavelength long, although for very long transducer-coupler arrays it may be advisable to utilize a support that is equivalent to unit multiples of one-half wavelength in length.

By "unit" multiples as used herein is meant multiples of a whole number, such as multiples of two, three or four, etc.

The thickness of the support should be less than one-twelfth of the wavelength of the frequency of operation of the device to assure minimization of any error introduced due to stiffness, although this does not seem to be critical. Widening the wall thickness of the support to one-eighth wavelength causes a minor reduction in efficiency of the support, but may not be objectionable in

many cases. The mean diameter of the support, if it is of the tube type, should be chosen to preclude radial resonance of the tube at or close to the operating frequency of the system, as energy losses can become significant if the tubular-type support vibrates in any mode other than in the direction of the axis of the device. The radial resonance of such a tube can be calculated by persons skilled in the art, as by the equations of A.E.H. Love on page 546 of A Treatise on the Mathematical Theory of Elasticity, 4th revised edition.

It is an object of this invention to provide vibratory devices which are more efficient in operation.

It is another object of this invention to provide economical supporting structures for ultrasonic or other vibratory devices which absorb a minimum amount of the vibratory energy developed by such devices.

It is a further object of this invention to provide supports for vibratory devices which will permit the device to be applied to the work areas with force, and will minimize undesirable system effects such as damping, frequency shift, and the like.

This invention has as a further object the provision of novel vibratory devices.

Other objects will appear hereinafter.

For the purpose of illustrating the invention there are shown in the drawings forms which are presently preferred; it being understood, however, that this invention is not limited to the precise arrangements and instrumentalities shown.

Referring to the drawings wherein like reference characters refer to like parts:

Figure 1 is an elevational view of a vibratory device embodying the present invention, with certain parts shown in schematic form.

Figure 2 is an isometric view, partially schematic, of another embodiment of the invention.

Figure 3 is an elevational view of a further embodiment of the invention.

Figure 4 is a side elevational view partly in section of a welder of the present invention which includes a support of the present invention.

Figure 5 is a side sectional view of another embodiment of the present invention showing a supported device constructed and arranged for a machining operation.

Referring to Figure 1, there is shown a magnetostriction transducer **1**, preferably of laminated nickel sheets to minimize eddy current losses, the length of the transducer being one-half wavelength long according to the material used at the applied frequency to insure axial resonance at the frequency and to minimize electrical losses. Nickel and its alloys have superior magnetostriction properties and therefore have been widely employed in vibratory devices. Transducer **1** is provided with a conventional attendant driving coil **2** and polarizing means **3**, both of well-known forms. Driving coil **2** energizes transducer **1** through the application of alternating electrical current. Polarizing means **3** may consist of a conventional magnetic biasing coil **4**, with a direct current supply such as a generator or battery **5**. Attached to one end of the transducer **1** is a rod-like coupler **6** of steel or other suitable material, equal in length to an even number of one-quarter wavelengths according to the material used at the applied frequency. Since the end of coupler **6** opposite the end attached to transducer **1** may normally be applied with force to the material being worked upon, or at least, is in boundary relationship to said material, no free end necessary to establish a true node in the device can be present in coupler **6** at which the device may be supported to minimize losses by absorption. As shown in Figure 1, one method of providing the necessary free end, and the consequent node at which the apparatus can be supported with minimum loss of the vibratory energy developed, is by attaching a second rod **7** of steel or other suitable elastic material to the end of the transducer opposite the end to which the coupler **6** is attached. In length, rod **7** is at least a whole one-half wavelength long according to the material used at the applied frequency, or n times one-quarter wavelength long, where n equals an even number. There is thus provided a vibrating resonant section having a free end **8** and a true node at **9**, which may constitute a flange as in the illustrated embodiment, one-quarter wavelength from free end **8**. Accordingly, the vibratory device may be supported with a minimum of power absorption by attaching the device by any suitable means at node **9** established in resonant section **7**. However, any force applied to node **9** on section **7** must be transmitted through the transducer **1** to reach coupler **6** and apply a force between coupler **6** and the work with which it is in contact. Therefore, this array, although it is perhaps somewhat preferable to an array which applies the force at the center of the transducer **1**, is not of very practical use because of the inadequate structural characteristics of the transducer **1**, which is of soft and laminated material which will act somewhat like a stack of cards and thus be unsuitable for application of a force, and also because pressure applied to such a transducer **1** tends to damp its vibratory action under the influence of alternating current.

In Figure 2 there is shown another embodiment of the invention. Transducer **20**, which may also be of laminated nickel, is provided with driving coil **2** and polarizing means **3**, as described above and has a coupler **23** of steel or other suitable material dimensioned as indicated in the description of coupler **6** in Figure 1, namely at least a unit multiple of one-half wavelength long according to the material used at the applied frequency, or n times one-quarter wavelength long, where n equals an even number. The coupler may be contoured in the manner shown at **24** to increase the amplitude of vibration, **24** being one or more additional one-half wavelengths long. The support member employed in this embodiment is a cylindrical shell **25** of steel or other suitable elastic material of a length one whole one-half wavelength long, where n equals an even number according to the metal used at the applied frequency. Cylindrical shell **25** surrounds coupler **23** as shown and is attached to it at **26** by appropriate attaching means such as by threads or preferably by welding, brazing, or soldering. End **27** of the cylindrical shell is free from any attachment or contact and, accordingly, when the system is vibrating a true node will develop in the shell at **28** one-quarter wavelength distant from free end **27** of the shell **25**. For attaching the device shown in Figure 2 to a supporting surface, the outer peripheral surface of shell **25** may be provided with a raised lip or flange **29** which is preferably integral with the shell **25** and which extends around the periphery of the shell. Flange **29** is positioned at a distance of one-quarter wavelength from free end **27** according to the material used at the applied frequency, i.e. at the node. The flange may then be used to attach the apparatus to a horizontal platform of any appropriate type, as by resting, bolting, or clamping, or may be otherwise positioned and secured as desired, as by welding or brazing.

The thickness of the flange **29** in the direction of the axis of the system is not critical, although increasing the thickness of flange **29** somewhat lowers the high Q nature of the system as would be evident to one skilled in this art. As a general rule, the thickness of the flange **29** should be the minimum consonant with securing desired strength characteristics.

The width of the flange, i.e. its over-all diameter, is not critical; in fact, the flange need not be a real circle.

For practical reasons, the attachment point **26** is ordinarily placed at an antinode or loop on the coupler **23**, being a zone of minimum stress. While I have found that the support of the type shown in Figure 2 is capable of rendering the device of which it forms a part essentially force-insensitive regardless of the location of its

point of attachment, e.g. even though the shell 25 were to be attached to the coupler 23 at a point other than an antinode or loop the resultant device would be insensitive to applied forces, e.g. would operate without serious frequency shift notwithstanding the presence of even transient applied forces, yet I have found that as a matter of practicality it is desirable that the shell 25 be attached to the coupler 23 at an antinode or loop.

In Figure 3 another variation of the invention is illustrated, in which there is shown a transducer 40 provided with a coupler 41, driving coil 42 and polarizing means 43 in the example as noted above. In this embodiment, the resonant support mount consists of a pair of diametrically opposed bars of metal 44, of suitable length and disposed parallel to and in alignment with the major axis of the coupler and offset from the surface thereof at, for example, approximately one-sixteenth of an inch. The ends of rods 44 adjacent the junction of the transducer and the coupler can be attached thereto by a flange 45, with the opposite ends 46 of the rods being free from attachment or contact, thus providing the free end 46 necessary to establish a true node at 47, one-quarter wavelength distant from free end 46. At true node 47, the rods may be provided with flanges 48 or other suitable attaching means which can be secured to clamps 49 or other suitable devices to support the entire device. Instead of two diametrically opposed rods, a multiplicity of rods may be provided around the periphery of the coupler.

The rods 44 are each dimensioned to be a unit multiple of one-half wavelength long for the material of which they are made according to the applied frequency, and so as to preclude other modes of vibration of the rods being below the axial resonant frequency of the rods, e.g. the rods must be of such diameter that their lowest frequency mode corresponds with the resonant frequency of the transducer-coupling system and other modes of vibration of the rods be higher.

As with the flange 29, the thickness of each of the flanges 48 although not critical should be the minimum consonant with securing desired strength characteristics in order to avoid the lowering of the high Q nature of the system.

As with the embodiment of Figure 2, for practical reasons it is desirable that the rods 44 be secured to the coupler 41 at a zone of minimum stress, i.e. at an antinode or loop. Thus, although even where the rods 44 are secured to the coupler 41 at a point other than an antinode or loop, the resultant combined system is essentially force-insensitive, attachment at an antinode or loop is desirable from the standpoint of practicality. While the point of securement in the illustrated embodiment is shown adjacent the transducer 40, it is to be understood that the rods 44 may be attached to the coupler 41 at other positions where an antinode or loop is present. Thus, with long couplers, it is possible to have a plurality of antinodes or loops on the couper, and even in the relatively short coupler illustrated in Figures 2 and 3 it is evident that there is an antinode or loop on the coupler adjacent the transducer and another antinode or loop on the coupler positioned one-half wavelength from the transducer.

In the embodiment of Figure 4 there is shown a welder designated generally by the numeral 50. The welder 50 is of the type described in the following patent applications: Serial No. 467,382, filed November 8, 1954, entitled "Method and Apparatus Employing Vibratory Energy for Bonding Materials," in the name of James Byron Jones, Carmine F. De Prisco, and myself, now abandoned; and its copending continuation-in-part applications: Serial No. 579,780, filed April 23, 1956, entitled "Method and Apparatus Employing Vibratory Energy for Bonding Metals," in the name of James Byron Jones, Carmine F. De Prisco, and myself; Serial No. 579,779, filed April 23, 1956, entitled "Vibratory Seam Welder and Vibratory Seam Welding Process," in the name of James Byron Jones, Carmine F. De Prisco, and myself; or it may be of the type described in Serial No. 610,991, filed September 5, 1956, entitled "Method and Apparatus Employing Vibratory Energy for Bonding Metals," in the name of James Byron Jones, Carmine F. De Prisco, and myself.

The disclosures of the aforesaid patent applications are to be construed as incorporated herein by reference.

The welder 50 includes a magnetostrictive transducer 52 comprising a laminated core of nickel, nickel-iron alloy, Permendur (an iron-cobalt alloy), or an aluminum-iron alloy, or other magnetostrictive material, or a magnetostrictive ferrite, properly dimensioned to insure axial resonance with the frequency of the alternating current applied thereto so as to cause it to change length periodically according to its coefficient of magnetostriction. Transducer 52 includes a rectangularly shaped opening 54 at its central portion. The elements of a polarizing coil 56 and an excitation coil 58 may be wound through the opening 54 within transducer 52. The desirability of magnetically polarizing transducer 52 by means of polarizing coil 56 in order for the metal laminations in transducer 52 to efficiently convert the applied R.F. energy from excitation coil 58 into vibratory energy will be readily understood by one skilled in the art.

In place of transducer 52, other geometries of transducing means for producing elastic vibratory energy may be used, such as a transducer stack of laminated strips of metal, associated with a permanent magnet and a source of applied R.F. energy.

The sonotrode 60 or coupling member or jaw member comprises a cylindrical rod portion 62 metal-to-metal bonded in end-to-end contact with transducer 52 and a tapered portion 64 whose taper may, but need not necessarily, satisfy the equation set forth at page 163 of Piezoelectric Crystals and Ultrasonics, by Warren P. Mason, published in 1950 by Van Nostrand and Company, namely a curved coupling member whose taper is an exponential function of the length and satisfies the relation:

$$S=S_0e^{-2Tl}$$

where S equals the original area, S_0 equals the reduced area, T equals the taper constant, and l equals the length of tapered section, and a tip 66 which comprises an enlarged bulb having a curved periphery. The length of the portion of the sonotrode 60 designated 62 should be an integral number of one-half wavelengths of the transducer's frequency in the material of the coupler, so that the joint between the transducer 52 and the sonotrode 62 will come at a loop of the wave motion and will not be appreciably strained.

The workpieces 68 and 70 undergoing welding may comprise strips of foil or sheet metal which are supported upon anvil 72.

The support for welder 50 comprises the support of the present invention and is designated 74. In the embodiment illustrated in Figure 2 the support 74 comprises a cylindrical shell 76 of metal such as a shell of stainless steel or the like, secured conveniently to the cylindrical portion 62 of sonotrode 60 at attachment point 78.

In the illustrated embodiment, the total length of the shell 76 is equivalent to one-half wavelength according to the material of which the shell 76 is formed at the applied frequency of transducer 52. Where it is desired that the length of the support be minimal, it is advantageous to have the total length of the support equivalent to one-half wavelength, and such length is the preferred embodiment of the present invention. However, it is to be understood that the support may have a length equivalent to a plurality of unit multiples of one-half wavelength, such as a length equal to one wavelength or one and one-half wavelengths.

A flange 80 at which support 74 may be carried is

positioned at the node one-quarter wavelength from the free end 82 of shell 76. The thickness of flange 80 is not critical, although increasing the thickness of flange 80 somewhat lowers the high Q nature of the system as would be evident to one skilled in this art. As a general rule, the thickness of flange 80 should be the minimum consonant with securing desired strength characteristics. The diameter of member 82 and the wall thickness of member 82 and dimensions of the flange 80 are as heretofore described.

Where, as in the illustrated embodiment, the total length of the shell 76 is equivalent to one-half wavelength according to the material of which the shell 76 is formed at the applied frequency of the transducer 52, the flange 80 is axially generally equidistant from the free end 82 and the end 78 which is attached to the cylindrical portion 62 of sonotrode 60, as both portions of the shell 76 on either side of the flange 80 are generally equivalent to one-quarter wavelength.

In the illustrated embodiment the flange 80 is brazed or welded or otherwise fixedly secured within an annulus in a member 86 which is pivoted about pivot 88. Force may be applied to the workpieces 68 and 70 undergoing welding at the upper end of member 86 wherein an arrow surmounted by "F" is illustrated in Figure 4. Notwithstanding the loading of the system in the manner indicated, which is in bending, the support 74 will remain force-insensitive essentially, as heretofore explained, since the node for such support will always be positioned at flange 80. This permits welding to be achieved notwithstanding the use of relatively high clamping pressures, and permits relatively large amounts of elastic vibratory energy to be transmitted to the workpieces 68 and 70 from the sonotrode 60.

Since the support of the present invention permits welding to be achieved over a wide variety of clamping pressures it is of great utility with welding units.

In the embodiment illustrated in Figure 4 for welding, the angle between the axis between the transducer-coupling system and the axis of the cylindrical conical member 72 should be approximately 90 degrees to preclude slipping of the members of the weldment during welding. It is most significant in the embodiment of Figure 4 that the force as designated by the arrow F is applied to the weldment with the mounting member 74 and the element 64 of the coupler 60 in bending, e.g. the mounting system in this embodiment is loaded in bending and not neecssarily in compression or shear or tension. So far as is known, the mounting system of the present invention is the only mounting system which will permit transmission of high static forces in bending without inducing a significant shift in the resonant frequency of the system which will make it difficult to track with the electrical driving system supplying alternating current to coil 58.

In the embodiment of the present invention shown in Figure 5 the support 74*a*, which in all respects is similar to the support 74 of Figure 4, is used to support a tool bit designated generally as 90. Tool bit 90 includes a magnetostrictive transducer 92, which generally resembles magnetostrictive transducer 52, being provided with a central rectangular opening 94, a polarizing coil 96, and an excitation coil 98. The tool bit 90 includes a cylindrical coupler 100 joined in end-to-end contact by a metal-to-metal bond to magnetostrictive transducer 92, the coupler 100 being engaged with the support 74*a* at the attachment point 78*a*, in a manner analogous to that in which the cylindrical portion 62 of sonotrode 60 is engaged with support 74 at attachment point 78. A tapered cutting portion 102 is fixedly secured in end-to-end contact with coupler 100. The tool bit 90 is carried within a tool post 104 having an arcuately shaped slot 106 in its base for receiving the flange 80*a* of support device 74*a*. Tool post 104 is provided with a clamping bolt 108 which engages flange 80*a* at a point opposite from the engagement of flange 80*a* with slot 106.

The tool bit 104 of the present invention may be used to effect the wedging removal of metal, as for example the wedging removal of the peripheral portion of a bar of metal which is rotated between centers, as between the live and dead centers of a lathe. The use of the support may thus be used to achieve ultrasonic machining wherein in addition to the wedging removal of metal by the tool bit, the tool bit is rapidly vibrated as for example at a frequency of in excess of 10,000 cycles per second. An excellent embodiment of an ultrasonic machining process is disclosed in copending patent application Serial No. 565,853 in the name of James B. Jones, Carmine F. De Prisco, Kenneth H. Yocom, Daniel W. Timmerman, and myself entitled: "Ultrasonic Machining Process and Apparatus."

In place of the magnetostrictive means heretofore referred to, other means known to those skilled in the art for producing vibratory energy may be utilized, including a wide variety of piezoelectric and magnetostrictive materials, including in addition to the materials heretofore mentioned: ferritic materials, piezoelectric ceramics, such as barium, titanate, etc., and natural crystals such as quartz, and also electromagnetic, pneumatic, and mechanical means.

This application is a continuation-in-part of my copending application Serial No. 517,599, filed June 23, 1955, now abandoned.

The present invention may be embodied in other specific forms without departing from the spirit or essential attributes thereof and, accordingly, reference should be made to the appended claims, rather than to the foregoing specification as indicating the scope of the invention.

I claim:

1. A vibratory device comprising a source of vibrations, a coupler and means for supporting said device comprising a resonant member one-half wavelength long according to the properties of the material of which said member is made and its frequency of operation, said means having an end attached to said device, the other end being free from attachment to establish a node when said device is vibrating at which node said device may be supported.

2. A vibratory device comprising a source of mechanical oscillations, a coupler, and means for supporting said device comprising a resonant member having a length equal to even multiples of one-quarter wavelength long according to the properties of the material of which said member is made and its frequency of operation, said means having one end attached to said device, the other end thereof being free from attachment to establish a node when said device is vibrating at which node said device may be supported.

3. A vibratory device comprising a source of oscillations, a coupler and resonant means for supporting said device comprising a plurality of rods having a length equal to even multiples of one-quarter wavelength according to the properties of the material of which said member is made and its frequency of operation, said rods disposed about said device and spaced therefrom, said rods being substantially in longitudinal alignment with the axis of said device, one end of each of said rods being attached to said device, the other end of each of said rods being free from attachment to establish a node when said device is vibrating at which node said device may be supported.

4. The device according to claim 3 wherein said rods are at least a pair of diametrically opposed rods.

5. The device according to claim 1 wherein said source of mechanical oscillations is of laminated nickel.

6. A vibratory device comprising a source of vibrations, a coupler, and resonant means for supporting said device comprising a cylindrical shell having a length equal

to even multiples of one-quarter wavelength according to the properties of the material of which said shell is made and its frequency of operation, said shell having one end attached to said device, the other end of said shell being free from attachment to establish a node when said device is vibrating at which node said device may be supported.

7. A vibratory device comprising a magnetostrictive source of vibrations, a coupler attached to said source of vibrations, and resonant means for supporting said device comprising a member having a length equal to even multiples of one-quarter wavelength according to the properties of the material of which said member is made and its frequency of operation, attached to said device, at least a one-half wavelength long section of said member being free from attachment to establish a node when said device is vibrating at which node said device may be supported.

8. A vibratory device comprising a magnetostrictive source of vibrations of laminated nickel, a coupler attached to said source of vibrations, and a resonant support mount for said device having one end attached to said device, said support mount paralleling said device in spaced apart relationship thereto, said support mount having a length equal to even multiples of one-quarter wavelength according to the properties of the material of which said member is made and its frequency of operation, the other end of said mount being free from attachment to establish a node when said device is vibrating at which node said device may be supported.

9. Apparatus according to claim 8 wherein said mount comprises a plurality of rods disposed about the periphery of said device.

10. Apparatus according to claim 8 wherein said mount comprises a cylindrical shell.

11. A vibratory device comprising a source of vibrations, a coupler and means for supporting said device comprising a resonant member having a length equal to even multiples of one-quarter wavelength according to the properties of the material of which said member is made and its frequency of operation, attached to said device and having a section thereof at least one-half wavelength long free from attachment to establish a node when said device is vibrating at which node said device may be supported.

12. A vibratory device comprising a source of vibrations, a coupler, and a resonant member attached to said device, said member having a length equal to even multiples of one-quarter wavelength according to the properties of the material of which said member is made and its frequency of operation, said member having a part at least one-half wavelength long, free from attachment, to establish a node when said device is vibrating at which node said device may be supported.

13. For use in combination with vibratory devices, a support mount therefor comprising a resonant member having a length equal to even multiples of one-quarter wavelength according to the properties of the material of which said member is made and its frequency of operation.

14. A support mount according to claim 13 in which said member is a cylindrical shell.

15. A support mount according to claim 13, in which said member is a plurality of rods.

16. For use in combination with vibratory devices, a support mount therefor comprising a resonant member of metal having a length equal to even multiples of one-quarter wavelength according to the properties of the material of which said member is made and its frequency of operation.

17. For use in combination with vibratory devices, a support mount therefor comprising a resonant member having a length equal to even multiples of one-quarter wavelength according to the properties of the material of which said member is made and its frequency of operation, said mount being attachable at one end thereof to said vibratory devices, the other end being free from attachment.

18. A support mount according to claim 18 in which said member is a cylindrical shell.

19. A support mount according to claim 19 in which said member is a plurality of longitudinally aligned rods.

20. A support for a vibratory device comprsing a source of mechanical vibrations and a coupler, said support comprising a resonant member having a length of an even multiple of one-quarter wavelength for the material of which the resonant member is made at the frequency of operation of the vibratory device, one end of said member having means for fixedly securing the support to the vibratory device, the other end of said member being constructed and arranged to be retained free from attachment from the vibratory device, means positioned at an odd multiple of one-quarter wavelength of the frequency of operation of the vibratory device for the material of which the resonant member is made from the free end of said member for carrying the support.

21. A support in accordance with claim 20 in which the resonant member is a cylindrical shell, said shell having a radially inwardly directed flange as the means for fixedly securing the support to a vibratory device.

22. A support for a vibratory device comprising a source of mechanical vibrations and a coupler, said support comprising a resonant member having a length of an even multiple of one-quarter wavelength for the material of which the resonant member is made at the frequency of operation of the vibratory device, one end of said member having means for fixedly securing the support to the vibratory device, the other end of said member being constructed and arranged to be retained free from attachment from the vibratory device, means positioned at one-quarter wavelength of the frequency of operation of the vibratory device for the material of which the resonant member is made from the free end of said member for carrying the support.

23. A support for a vibratory device comprising a source of mechanical vibrations and a coupler, said support comprising a resonant member having a length of a one-half wavelength for the material of which the resonant member is made at the frequency of operation of the vibratory device, one end of said member having means for fixedly securing the support to the vibratory device, the other end of said member being constructed and arranged to the retained free from attachment from the vibratory device, means positioned at one-quarter wavelength of the frequency of operation of the vibratory device for the material of which the resonant member is made from the free end of said member for carrying the support, said resonant member being of regular cross-sectional contour and having a thickness of less than one-twelfth wavelength of the frequency of operation of the vibratory device for the material of which the resonant member is made.

24. A support for a vibratory device comprising a source of mechanical vibrations and a coupler, said support comprising a pair of resonant members, each resonant member having a length of an even multiple of one-quarter wavelength for the material of which the resonant members are made at the frequency of operation of the vibratory device, one end of each of said members having means for fixedly securing the support to the vibratory device, said means comprising a flange engaged with said vibratory device and said member and retaining said member in spaced disposition from said vibratory device, the other end of each of said members being constructed and arranged to be retained free from attachment from the vibratory device, means positioned on each member at an odd multiple of one-quarter wavelength of the frequency of operation of the vibratory device for the material of which the resonant member is made from the free end of said member for carry-

ing the support, each of said resonant members being of regular cross-sectional contour and having a thickness of less than one-twelfth wavelength of the frequency of operation of the vibratory device for the material of which said resonant member is made.

25. Apparatus including in combination a vibratory device comprising a source of mechanical vibrations and a coupler, and a support for said vibratory device secured to said coupler, said support comprising a resonant member having a length of an even multiple of one-quarter wavelength for the material of which the resonant member is made at the frequency of operation of said vibratory device, one end of said member having means for fixedly securing said support to said vibratory device, the other end of said member being constructed and arranged to be retained free from attachment from said vibratory device, means positioned at an odd multiple of one-quarter wavelength for the material of which said resonant member is made at the frequency of operation of said vibratory device from the free end of said member for carrying the support.

26. Apparatus in accordance with claim 25 in which the resonant member is a cylindrical shell, said shell having a radially inwardly directed flange as the means for fixedly securing the support to the vibratory device.

27. Apparatus in accordance with claim 25 in which the support is secured to the coupler at an antinode on the coupler.

28. Apparatus including in combination a vibratory device comprising a source of mechanical vibrations and a coupler, and a support for said device secured to said coupler at an antinode on said coupler, said support comprising a resonant member having a length of an even multiple of one-quarter wavelengths for the material of which the resonant member is made at the frequency of operation of the vibratory device, one end of said member having means for fixedly securing the support to said vibratory device, the other end of said member being constructed and arranged free from attachment from said vibratory device, means positioned at an odd multiple of one-quarter wavelength for the material of which the resonant member is made at the frequency of operation of said vibratory device from the free end of said member for carrying the support, said resonant member being of regular cross-sectional contour, and having a thickness less than one-twelfth wavelength of the frequency of operation of the vibratory device.

29. Apparatus including in combination a vibratory device comprising a source of mechanical vibrations and a coupler, and a support for said device secured to said coupler at an antinode on said coupler, said support comprising a resonant member having a length of an even multiple of one-quarter wavelengths for the material of which the resonant member is made at the frequency of operation of the vibratory device, one end of said member having means for fixedly securing said support to said vibratory device, the other end of said member being constructed and arranged to be retained free from attachment from the vibratory device, means positioned at one-quarter wavelength for the material of which the resonant member is made at the frequency of operation of the vibratory device from the free end of said member for carrying the support, said resonant member having a thickness less than one-twelfth wavelength of the frequency of operation of the vibratory device for the material of which the resonant member is made.

30. Apparatus including in combination a vibratory device comprising a source of mechanical vibrations and a coupler, and a support for said device secured to said coupler at an antinode on said coupler, said support comprising a resonant member having a length of a one-half wavelength for the material of which the resonant member is made at the frequency of operation of said vibratory device, one end of said member having means for fixedly securing the support to said vibratory device, the other end of said member being constructed and arranged to be retained free from attachment from said vibratory device, means positioned at one-quarter wavelength for the material of which the resonant member is made at the frequency of operation of the vibratory device from the free end of said member for carrying said support, said resonant member being of regular contour and having a thickness of less than one-twelfth wavelength of the frequency of operation of the vibratory device for the material of which the resonant member is made.

31. Apparatus including in combination a vibratory device comprising a source of mechanical vibrations and a coupler, and a support for said device secured to said coupler at an antinode on said coupler, said support comprising a pair of resonant members, each member having a length of an even multiple of one-quarter wavelength for the material of which the resonant member is made at the frequency of operation of said vibratory device, one end of each of said members having means for fixedly securing the support to said vibratory device, said means comprising a flange engaged with said vibratory device and said member and retaining said member in spaced disposition from said vibratory device, the other end of each of said members being constructed and arranged to be retained free from attachment from said vibratory device, means on each of said members positioned at an odd multiple of one-quarter wavelength for the material of which the resonant member is made at the frequency of operation of the vibratory device from the free end of said member for carrying said support, said resonant member being of regular cross-sectional contour and having a thickness of less than one-twelfth wavelength of the frequency of operation of the vibratory device for the material of which the resonant member is made.

No references cited.