Aug. 25, 1953 C. A. ZAROBSKY ET AL 2,650,051

SUPPORT FOR ROTATABLE ANTENNA STRUCTURES

Filed July 21, 1950 2 Sheets-Sheet 1

FIG. 1

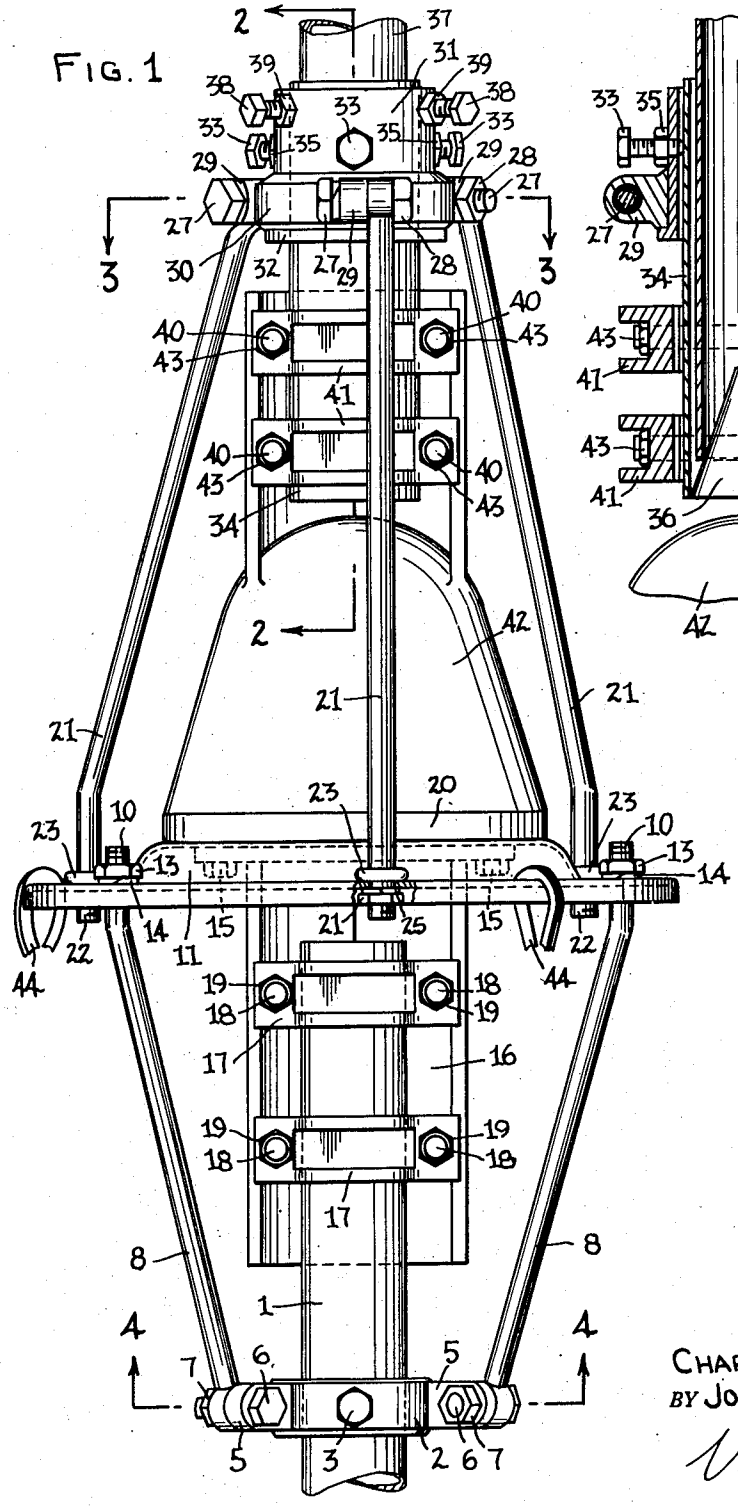

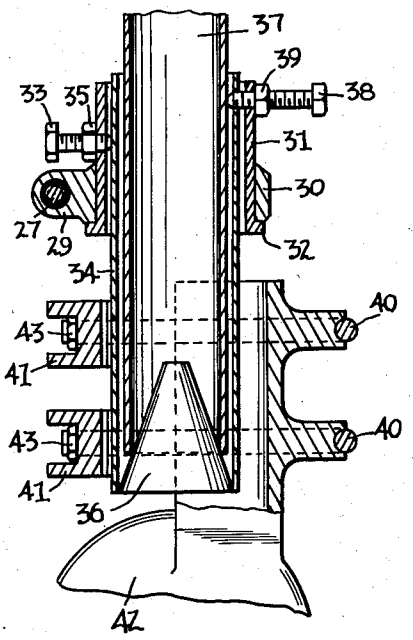

FIG. 2

INVENTORS.
CHARLES A. ZAROBSKY
BY JOSEPH F. SEYBOLD
William Isler
ATTORNEY.

Aug. 25, 1953 C. A. ZAROBSKY ET AL 2,650,051

SUPPORT FOR ROTATABLE ANTENNA STRUCTURES

Filed July 21, 1950 2 Sheets-Sheet 2

FIG. 3

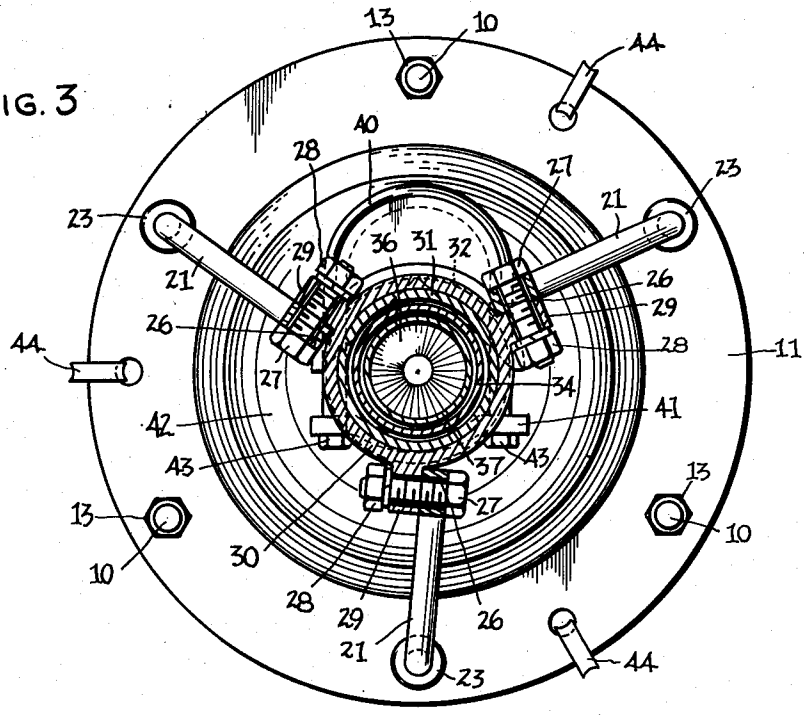

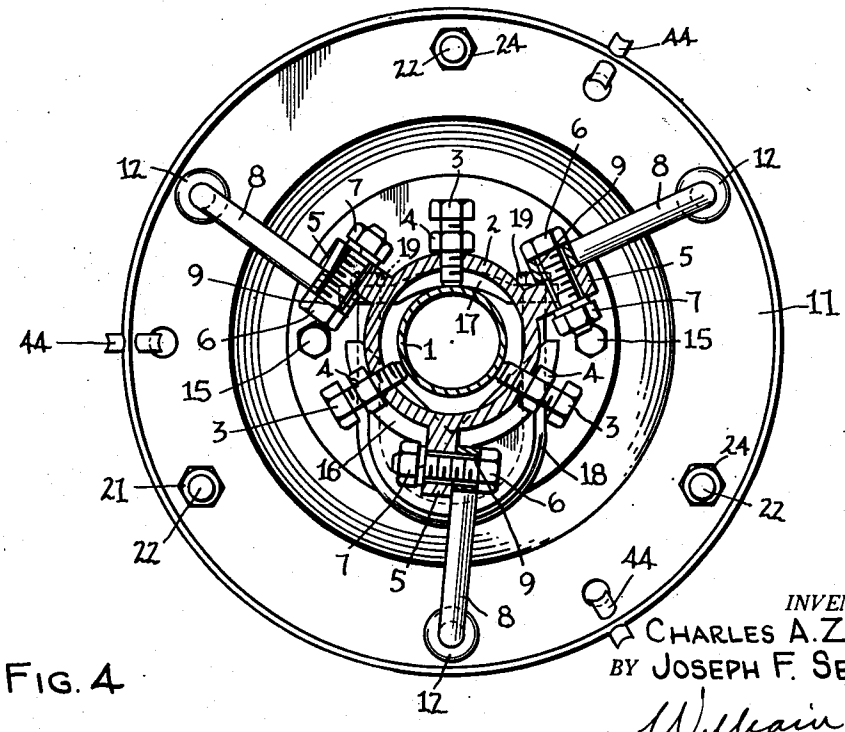

FIG. 4

INVENTORS.
CHARLES A. ZAROBSKY
BY JOSEPH F. SEYBOLD
William Isler
ATTORNEY.

Patented Aug. 25, 1953

2,650,051

UNITED STATES PATENT OFFICE

2,650,051

SUPPORT FOR ROTATABLE ANTENNA STRUCTURES

Charles A. Zarobsky and Joseph F. Seybold, Cleveland, Ohio, assignors to The Radiart Corporation, Cleveland, Ohio, a corporation of Ohio

Application July 21, 1950, Serial No. 175,229

7 Claims. (Cl. 248—45)

1

This invention relates, as indicated, to a support for rotatable antenna structures.

A primary object of the invention is to provide a support of the character described, which is especially adapted for use in connection with multiple stacked and abnormally heavy antennas used with rotators.

Another object of the invention is to provide a support of the character described, which offers maximum support for "extraordinary" installations beyond normal double-stacked TV antennas.

A further object of the invention is to provide a support of the character described, which can be quickly and easily installed in conjunction with motor units of antenna rotators, while allowing smooth rotation of the upper mast of the antenna.

Other objects of the invention are to provide a support of the character described, which is weatherproof, is economical to manufacture and install, and can be used in conjunction with masts of various diameters.

Other objects and advantages of the invention will be apparent during the course of the following description.

In the accompanying drawings, forming a part of this specification, and in which like numerals are employed to designate like parts throughout the same,

Fig. 1 is a side elevational view of a support for rotatable antenna structures embodying the features of our invention;

Fig. 2 is a longitudinal cross-sectional view taken on line 2—2 of Fig. 1 showing details of the upper clamp assembly;

Fig. 3 is a transverse cross-sectional view taken as indicated by line 3—3 of Fig. 1; and

Fig. 4 is a transverse cross-sectional view taken as indicated by line 4—4 of Fig. 1.

Referring more particularly to the drawings, reference numeral 1 designates the lower mast of the antenna structure, which is a tubular member supported in any desired manner, and in an upright position.

The support, which is the subject of this invention, is removably mounted on the upper end of the member 1. For this purpose, the support is provided at its lower end with a collar or ring 2, which surrounds the upper end of the member 1, and is provided, at circumferentially-spaced points, with screws 3, which extend radially through the collar, these screws adapted to have their stem ends brought into engagement with the outer surface of the member 1 for the

2

purpose of firmly securing the support to the member 1. After the support has been thus secured to the member 1, the screws 3 may be locked in position by means of lock nuts 4, which are mounted on the screws 3, the lock nuts being moved into contact with the collar 2 for this purpose.

The collar 2 is provided, at circumferentially-spaced points intermediate the screws 3, with radially-outwardly extending ears or lugs 5 formed integrally with the collar. Secured to the ears 5, as by means of bolts 6 and nuts 7, are rods 8 having eyes 9 at their lower ends, through which the bolts 6 extend. The rods 8 extend angularly upwardly and outwardly, and are provided with vertical threaded upper ends 10, which extend through the marginal portion of an annular base plate 11. The ends 10 of the rods are removably secured to the base plate 11 by means of annular nuts 12 which are threadedly secured to the ends 10 and engage the lower surface of the base plate, and nuts 13 which are threadedly secured to the ends 10 above the base plate, lock washers 14 being interposed between the nuts 13 and the base plate.

Secured to the base plate 11, as by means of screws 15, is a clamp consisting of a die casting 16, adjustable clamp elements 17, and U-bolts 18. The threaded ends of the U-bolts 18 extending through the adjustable clamp elements 17 and are secured to the latter by means of nuts 19. The upper end of the mast 1 extends into the aforesaid clamp, and is firmly secured therein by drawing up the nuts 19, thereby causing the mast to be gripped between the casting 16 and elements 17. This clamp provides additional rigidity between the support and mast 1 and insures proper vertical alignment between the mast 1 and the axis of the base plate 11.

The screws 15 are threadedly secured to the stator or stationary portion 20 of an antenna rotator. The portion 20 of the rotator is disposed directly above and rests on the central raised portion of the base plate 11.

Secured to the marginal portion of the base plate 11, at circumferentially-spaced points intermediate the points of connection of the rods 8 to the base plate, are rods 21, which extend angularly upwardly and inwardly, and are provided with vertical threaded lower ends 22, which extend through the marginal portion of the base plate. The ends 22 are removably secured to the base plate 11 by means of annular nuts 23 which are threadedly secured to the ends 22 and engage the upper surface of the base plate, and nuts

24 which are threadedly secured to the ends 22 below the base plate, lock washers 25 being interposed between the nuts 24 and the base plate.

The rods 21 have eyes 26 at their upper ends, which are secured, as by means of bolts 27 and nuts 28, to ears or lugs 29 formed integrally with a bearing ring 30 and extending radially-outwardly from said ring. Mounted in the ring 30, for rotation therein, is a collar 31 having a thrust flange 32 at its lower end, upon which the ring 30 rests.

Rigidly secured within the collar 31, as by means of circumferentially-spaced set screws 33, is a tubular member 34 of slightly smaller external diameter than the internal diameter of the collar 31, the set screws 33 extending through the collar 31 and into engagement with the member 34. The screws 33 serve to center the tubular member 34 relatively to the collar 31, and after the member 34 has been properly centered, the screws 33 are locked against displacement by means of lock nuts 35. The member 34 extends for a considerable distance below the collar 31, and has secured in the lower end thereof, a conical member 36, which serves as a support for the upper antenna mast 37, which may be of various diameters up to substantially the internal diameter of the collar 31. Due to the conicity of the member 36, the lower end of the mast 37 is automatically centered with respect to the collar 31, irrespective of the diameter of the mast. The intermediate portion of the mast 37 is centered with respect to the collar 31 by means of circumferentially-spaced centering set screws 38 which extend through the collar 31, tubular member 34 and into engagement with the mast 37. After the intermediate portion of the mast 37 has been thus centered, the screws 38 are locked against displacement by means of lock nuts 39. The screws 38 also serve to lock the tubular member 34 against axial displacement relatively to the collar 31, and the screws 33 serve also to prevent axial displacement of the collar 31 relatively to the ring or collar 30. The antenna mast 37 supports the antenna array, which is not shown.

Rigidly secured to the lower end of the tubular member 34, as by means of U-bolts 40, and clamp elements 41, is the rotor or rotatable element or portion 42 of the antenna rotator, hereinbefore referred to, the element 42 serving to rotate the mast 37 when the rotator is energized. The threaded ends of the U-bolts 40 extend through the adjustable clamp elements 41 and are secured to the latter by means of nuts 43. This clamping arrangement provides additional rigidity between the support and mast 37, and insures proper vertical alignment between the masts 1 and 37.

In some cases, where the support is subjected to high wind stresses, guy wires may be used to steady the support, and for this purpose, the base plate 11 is provided at circumferentially-spaced points with guy thimbles 44 to which the upper ends of the guy wires may be secured.

The support or superstructure, as thus described, is especially adapted for the support of multiple stacked and abnormally heavy antennas used with rotators. It offers maximum support for "extraordinary" installations beyond normal double-stacked TV antennas, and can be quickly and easily installed in conjunction with motor units of antenna rotators, while allowing smooth rotation of the upper mast of the antenna. The support, moreover, is weatherproof, economical to manufacture and install, and is usable in conjunction with masts of various diameters.

It is to be understood that the form of our invention, herewith shown and described, is to be taken as a preferred example of the same, and that various changes in the shape, size and arrangement of parts may be resorted to, without departing from the spirit of our invention or the scope of the subjoined claims.

Having thus described our invention, we claim:

1. The combination of a rotator, a supporting mast secured to a non-rotating portion of said rotator, a base plate secured to the non-rotating portion of said rotator, means secured to said base plate for engaging said support mast at a point spaced from its securement to said rotator, a tubular member secured to said rotator for axial rotation therewith, an antenna mast secured to said tubular member, positioning means provided on said member for axially aligning said antenna mast with said member, a bearing ring, means secured to said base plate and supporting said bearing ring at an elevated position above said rotator, and a collar secured to said tubular member and journalled in said bearing ring whereby said antenna mast is rotatably supported at an elevated point spaced from said rotator.

2. The combination of a rotator having a stationary and a rotating portion, a base plate secured to the stationary portion of said rotator, a tubular member secured to the rotating portion of said rotator for rotation therewith, said member being in axial alignment with the axis of rotation of said rotating portion, an antenna mast secured to said tubular member, means for axially aligning said antenna mast with said member, a bearing ring, means secured to said base plate and supporting said bearing ring at an elevated position above said rotator, and a collar journalled in said bearing ring and secured to said tubular member, whereby said collar, tubular member and antenna mast are rotated as a unit.

3. The combination, as defined in claim 2, in which said collar is secured to said tubular member by means of circumferentially-spaced set screws, and said collar has a base flange, said collar being maintained against axial displacement relatively to said ring by said set screws and flange.

4. The combination, as defined in claim 2, in which the means for axially aligning the antenna mast with the tubular member comprises a conical member supported in the lower end of the tubular member and upon which the antenna mast is supported, and circumferentially-spaced set screws extending through said collar and tubular member and into engagement with said antenna mast.

5. The combination of a tubular support mast, a base plate supported by said mast in vertically-spaced relation to the upper end of said mast, a rotator having a stationary and a rotating portion, said base plate secured to the stationary portion of said rotator, a tubular member secured to the rotating portion of said rotator for rotation therewith, said member being in axial alignment with the axis of rotation of said rotating portion, an antenna mast secured to said tubular member in axial alignment with said support mast, a bearing ring, means secured to said base plate and supporting said bearing ring, and a collar journalled in said bearing ring and secured to said tubular member, whereby said collar,

tubular member and antenna mast are rotatable as a unit.

6. The combination of a rotator having a stationary portion and a rotating portion, a tubular member secured to said rotating portion for coaxial rotation therewith, an antenna mast secured to said tubular member in axial alignment therewith, a bearing ring, means secured to said stationary portion and supporting said bearing ring at an elevated position above said rotator, and a collar journalled in said bearing ring and secured to said tubular member for coaxial rotation therewith.

7. A combination, as defined in claim 6, including adjustable means carried by said tubular member for axially aligning said antenna mast with said member.

CHARLES A. ZAROBSKY.
JOSEPH F. SEYBOLD.

References Cited in the file of this patent

UNITED STATES PATENTS

Number	Name	Date
626,514	Wagner	June 6, 1899
1,527,596	MacCartney	Feb. 24, 1925
2,292,791	Mims	Aug. 11, 1942
2,416,802	Roung	Mar. 4, 1947
2,498,957	Jordan	Feb. 28, 1950
2,566,897	Koenig	Sept. 4, 1951