(12) INTERNATIONAL APPLICATION PUBLISHED UNDER THE PATENT COOPERATION TREATY (PCT)

(19) World Intellectual Property Organization
International Bureau

(43) International Publication Date
28 November 2013 (28.11.2013)

WIPO | PCT

(10) International Publication Number
WO 2013/177335 A1

(51) International Patent Classification:
A61B 17/04 (2006.01) *A61L 17/10* (2006.01)
A61B 17/115 (2006.01)

(21) International Application Number:
PCT/US2013/042310

(22) International Filing Date:
22 May 2013 (22.05.2013)

(25) Filing Language: English

(26) Publication Language: English

(30) Priority Data:
13/477,628 22 May 2012 (22.05.2012) US

(71) Applicant: **RIVER POINT, LLC** [US/US]; 825 NE 25th Avenue, Portland, OR 97232 (US).

(72) Inventors: **FERGUSON, Patrick, Edward**; 825 NE 25th Avenue, Portland, OR 97232 (US). **FERGUSON, Patrick, Joseph**; 825 NE 25th Avenue, Portland, OR 97232 (US). **SUNDHOLM, Aaron, Joseph**; 825 NE 25th Avenue, Portland, OR 97232 (US).

(74) Agent: **SIEGEL, Thimothy E.**; Thimothy E Siegel Patent Law, PLLC, 777 108th Avenue NE, Suite 2240, Bellevue, WA 98004 (US).

(81) Designated States *(unless otherwise indicated, for every kind of national protection available)*: AE, AG, AL, AM, AO, AT, AU, AZ, BA, BB, BG, BH, BN, BR, BW, BY, BZ, CA, CH, CL, CN, CO, CR, CU, CZ, DE, DK, DM, DO, DZ, EC, EE, EG, ES, FI, GB, GD, GE, GH, GM, GT, HN, HR, HU, ID, IL, IN, IS, JP, KE, KG, KM, KN, KP, KR, KZ, LA, LC, LK, LR, LS, LT, LU, LY, MA, MD, ME, MG, MK, MN, MW, MX, MY, MZ, NA, NG, NI, NO, NZ, OM, PA, PE, PG, PH, PL, PT, QA, RO, RS, RU, RW, SC, SD, SE, SG, SK, SL, SM, ST, SV, SY, TH, TJ, TM, TN, TR, TT, TZ, UA, UG, US, UZ, VC, VN, ZA, ZM, ZW.

(84) Designated States *(unless otherwise indicated, for every kind of regional protection available)*: ARIPO (BW, GH, GM, KE, LR, LS, MW, MZ, NA, RW, SD, SL, SZ, TZ, UG, ZM, ZW), Eurasian (AM, AZ, BY, KG, KZ, RU, TJ, TM), European (AL, AT, BE, BG, CH, CY, CZ, DE, DK, EE, ES, FI, FR, GB, GR, HR, HU, IE, IS, IT, LT, LU, LV, MC, MK, MT, NL, NO, PL, PT, RO, RS, SE, SI, SK, SM, TR), OAPI (BF, BJ, CF, CG, CI, CM, GA, GN, GQ, GW, ML, MR, NE, SN, TD, TG).

Published:
— *with international search report (Art. 21(3))*
— *with amended claims (Art. 19(1))*

(54) Title: CONTINUOUS LOOP AND BUTTON ASSEMBLY

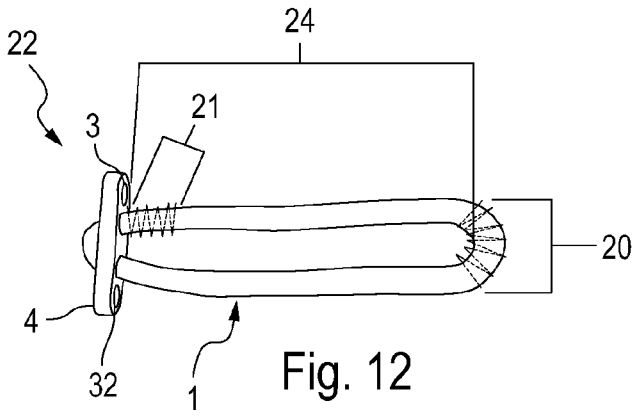

Fig. 12

(57) Abstract: Fixation assemblies (22) having a button (4) captured by a continuous (i.e., closed) loop of fiber (1), such as ultra high molecular weight polyethylene (UHMWPE) fiber are disclosed herein. Preferred assemblies are constructed such that the intact button (4) cannot be detached from the continuous loop (1) without breaking or opening the loop of fiber (1). The closed fiber (1) advantageously contains at least one or two stitched, or otherwise secured or reinforced, sections (20, 21) positioned on the loop.

WO 2013/177335 A1

CONTINUOUS LOOP AND BUTTON ASSEMBLY

FIELD OF THE INVENTION

[001] The embodiments herein relate to bone-tendon-bone, single-bundle soft tissue, and double-bundle soft tissue fixation assemblies and methods of making and using said assemblies.

BACKGROUND

[002] Continuous loop suture and button assemblies are commonly used during orthopedic surgery for bone-tendon-bone, single-bundle soft tissue, and double-bundle soft tissue fixation, such as during cruciate reconstruction. For example, during anterior cruciate ligament (ACL) reconstruction, a bone-tendon-bone graft is commonly positioned within both the femur and tibia bones. These grafts are often secured to a continuous loop/button assembly, which are in turn anchored to a bone. One example of a loop/button assembly is disclosed in U.S. Patent No. 6,533,802 to Bojarski et al. ("Bojarksi"). Bojarski references a few different general methods of attaching a button to a continuous loop: (a) start with a closed loop suture and then capture the button by threading loop sections through openings in the button or wrapping the loop sections around channels/arms of the button (*e.g.,* Bojarksi Fig. 12), (b) start with a thread having a leading end and utilize an automated winding machine to continuously wrap the leading end through apertures in the button to form a closed loop, such as disclosed in WO 99/47079 to Bryant ("Bryant"), or (c) provide a suture with two open ends, thread and/or wrap the suture to an anchor button and then tie the open ends together, such as disclosed in U.S. Patent No. 5,769,894 to Ferragamo ("Ferragamo"). The above described methods of making continuous loop and button assemblies result in products that are susceptible to breaking over time due to mechanical stress.

[003] In light of the disadvantages of the prior art loop/button products, it is an object of the teachings herein to provide continuous loop and button assemblies and methods of making the same that are mechanically stronger than prior products.

SUMMARY

[004] The teachings herein are directed to methods of making a continuous loop fixation assembly comprising providing an anchor button having an aperture; threading an open fiber having a lumen through the aperture of the button thereby defining first and second sections of the fiber separated by the button, wherein the first fiber section comprises a cut tail and the second fiber section comprises a save tail; inserting the cut tail within the lumen of the fiber at a first position to form a loop; inserting the save tail within the lumen of the fiber at a second position; and reinforcing a first section of the loop that includes the first position where the cut tail was inserted into the lumen of the fiber.

[005] Further embodiments are directed to methods of making a continuous loop fixation assembly comprising providing an anchor button having an aperture; threading an open fiber having a lumen through the aperture of the button thereby defining first and second sections of the fiber separated by the button, wherein the first fiber section comprises a cut tail and the second fiber section comprises a save tail; inserting the cut tail within the lumen of the fiber at a first position to form a loop; inserting the save tail within the lumen of the fiber at a second position; and reinforcing a first section of the loop that fixates the cut tail and the save tail together within the fiber.

[006] Still additional embodiments are directed to implantable continuous loop assemblies for graft fixation comprising: an anchor button having an aperture; a closed loop of braided fiber having a lumen and first and second tail ends threaded into the lumen at first and second positions to create an overlapped loop, wherein the closed loop of braided fiber passes through the aperture of the anchor button, such that the intact anchor button cannot be removed from the closed loop of fiber without breaking the loop of fiber; and a first reinforced section of fiber covering the first position where the first tail end is threaded into the lumen. In an additional preferred embodiment, only the first tail is threaded into the lumen, with the second tail being cut close to where the first tail

enters the lumen, and the entry point of the first tail into the lumen being reinforced. The method of making this fixation device is also an embodiment, together with the reinforcing schemes further detailed, are also embodiments.

[007] Further embodiments are directed to implantable continuous loop assemblies for graft fixation comprising: an anchor button having an aperture; a closed loop of braided fiber having a lumen and first and second tail ends threaded into the lumen at first and second positions to create an overlapped loop, wherein the closed loop of braided fiber passes through the aperture of the anchor button, such that the intact anchor button cannot be removed from the closed loop of fiber without breaking the loop of fiber; and a first reinforced section of fiber that couples the first and second tail ends together within the lumen.

BRIEF DESCRIPTION OF THE DRAWINGS

[008] It will be appreciated that the drawings are not necessarily to scale, with emphasis instead being placed on illustrating the various aspects and features of embodiments of the invention, in which:

[009] Figure 1 is a perspective view of a button captured by an open fiber having two tails: a save tail and a cut tail.

[0010] Figure 2 is a perspective view showing defined entry and exit points on the fiber for a lacing tool.

[0011] Figure 3 is a perspective, partially internal view showing a lacing tool being inserted through the fiber.

[0012] Figure 4 is a perspective, partially internal view showing the lacing tool grabbing the cut tail.

[0013] Figure 5 is a perspective, partially internal view showing the lacing tool pulling the cut tail through the fiber.

[0014] Figure 6 is a perspective, partially internal view of the cut tail extending out of the fiber.

[0015] Figure 7 is a perspective, partially internal view of the cut tail receded within the fiber.

[0016] Figure 8 is a perspective, partially internal view showing the lacing tool inserted through the fiber and grasping the save tail.

[0017] Figure 9 is a perspective, partially internal view of the save tail extending out of the fiber.

[0018] Figure 10 is a perspective view showing a preferred directional path of stitching along the fiber.

[0019] Figure 11 is a perspective, partially internal view showing the stitching sections along the fiber.

[0020] Figure 12 is a perspective, partially internal view of the final continuous loop button assembly.

BEST MODES OF CARRYING OUT THE INVENTION

[0021] Embodiments of the present invention are described below with reference to the above described Figures. It is, however, expressly noted that the present invention is not limited to the embodiments depicted in the Figures, but rather the intention is that modifications that are apparent to the person skilled in the art and equivalents thereof are also included.

[0022] The teachings herein are primarily directed to a loop button assembly (*e.g.,* **22**) such as shown in FIG. 12 and methods of manufacturing the same. All materials present in the final assembly **22** should be biocompatible as a surgical implant, and are thus preferably sterilized, and packaged accordingly.

[0023] FIG. 1 is a perspective view of a button **4** coupled to an open fiber **1** having two tails: a save tail **3** and a cut tail **2.** According to preferred embodiments, the fiber **1** is a biocompatible fiber, such as an ultra-high molecular weight polyethylene (UHMWPE) fiber, although suitable non-preferred materials can be used as well including polyester and POLYBLEND®, for example. Additionally, it is preferred that the fiber is braided as opposed to being monofilamentous. Braided fibers are particularly

advantageous in the teachings herein as they are stronger and allow for the ends of the tails **3**, **2** to be threaded through the fiber as will be discussed in more detail below.

[0024] The button **4** is coupled to the fiber **1** preferably through 1 or more apertures, (*e.g.*, **30** and **31**) in the button **4**. Although the button **4** shown in the FIG. 2, includes two circular apertures **30 31** for feeding the fiber **1** through, and two additional circular apertures **32 33** for allowing the button to secure to additional sutures, or other coupling means such as to secure a bone-tendon-bone graft, this particular button design is expressly non-limiting. Any suitable number and shapes of apertures can be used on an anchor button for the assemblies herein. Additionally, while the button **4** shown in FIG. 2 is racetrack shaped any suitable shaped anchor button can be used with the loop assemblies provided herein. Non-limiting examples of buttons that can be used with the teachings herein, include the anchor of the XO BUTTON® commercially available by CONMED® /LINVATEC® and suitable buttons disclosed in U.S. Patent 6,533,802 to Bojarski et al., and U.S. Patent 5,306,301 to Graf et al., Thus the buttons used in the teachings herein can be a variety of shapes, non-exclusively including oval, racetrack, circular, square, rectangular, and can have 1, 2, 3, 4, 5, 6, or more apertures for allowing the continuous loop or additional sutures to be thread through. Apertures can be circular, ovular, square, rectangular, and the like as well. Additionally the button can include cantilevered arms defining channels, if so desired. Any of the above buttons are suitable in that they can couple to the continuous loop in a manner that an intact button cannot be detached from the loop without opening or breaking the loop.

[0025] Buttons are advantageously made from any suitable surgically implantable biocompatible material, non-exclusively including metal, including surgical steel and titanium, or thermoplastics, for example. Non-preferred buttons can be made of a biocompatible thermoplastic as well, for example.

[0026] With reference to FIGs. 1 and 2, the fiber **1** is threaded through apertures **30, 31** in the button **4**. The button is then positioned approximately 1/3 down the length of the open fiber **1**, thereby defining a 1/3 length section (having the cut tail **2**) and a 2/3 length section (having the save tail **3**). After the button **4** is situated about 1/3

down the length of the fiber **1**, entry **5** and exit **6** points can be designated along the approximately 2/3 length section to define a middle section **9**. The distal end of the 2/3 section, after the middle section **9**, defines the save tail section **3.** More specifically, it is preferred Table I can be utilized as an approximate guide to determine suitable lengths of the starting fiber **1**, save tail **3**, and middle section **9** based on the final loop size desired. For example if a 20mm final loop size is desired, it would be advantageous to begin with a thread having a length of about 6 inches (152.4 mm), and to configure the button and thread such that the middle section is 35 mm in length and the save tail section is 40 mm in length. Loop size is measured from the largest inner diameter of the fiber **1** loop. More specifically, according to a preferred embodiment, it can be the distance from the inner perimeter of the button **4** to the inner perimeter of the second stitch **20**, as defined by the bracket **24** in FIG. 12. The largest inner diameter is the distance used to designate the loop size regardless if the second stitch is positioned opposite from the button or not present in the fiber loop **1** at all.

Table I

Loop Size (mm)	Fiber Length (in)	Save Tail Length (mm)	Middle Section Length (mm)	Pre-Stretch Length (mm)
15	6	40	30	~13
20	6	40	35	~18
25	7	40	45	~23
30	8	45	60	~28
35	8	50	65	~33
40	10	55	75	~38

[0027] As shown in FIG. 2, the fiber **1** is preferably fluffed at the entry **5** and exit **6** points to make it easier for a lacing tool **7** to be inserted through the middle section

9. One end of the lacing tool **7** can include a handle to allow a user to position, guide, push, and pull the tool. The lacing tool **7** also includes a main body that is preferably substantially linear and having a diameter, or cross-section, small enough to thread through the fiber **1**. The end of the lacing tool **7** opposite of the handle can include a hinged barb **10** to allow for coupling to the fiber **1.** The hinge allows the barb **10** to have a lower profile when traversing through the inside of fiber **1** while minimizing the chance of snags. Other means for coupling to the fiber are readily contemplated and can non-exclusively include one or more barbs (hinged or unhinged) hooks, clamps (such that can be opened and closed by the handle) and the like, for example. Said means for coupling **10** preferably should not prevent or hinder the lacing tool **7** from being pushed into or pulled out of the inside of the fiber **1.**

[0028] As depicted in FIG. 3, once the middle section **9** is defined, the barb **10** of the lacing tool **7** is pushed into the lumen of the fiber **1** at the fluffed entry point **5**. The barb **10** is pushed through the inside of the middle section **9** and guided outward through the fluffed exit point **6**. With reference to FIGs. 4 and 5, the cut tail **2** of the 1/3 length section is then coupled to the barb **10** and configured to allow the lacing tool **7** and cut tail **2** to be pulled back into the middle section **9** at the exit point **6**. The barb **10** and coupled cut tail **2** can be pulled out of the middle section **9** at the entry point **5**. As shown in FIG. 6, this step results in general loop shape with the cut tail section **2** being exposed out of the fiber **1** at the entry point **5**. The exposed cut tail **2** can be cut as close to the entry point **5** as possible, utilizing one or more of the following: scissors, knife, cutting instrument, thermal knife, and/or razor blade, and the like while avoiding cutting the external fiber near the entry point **5**. The remaining cut tail **2** can be retracted within the lumen of the fiber through the entry point **5,** as shown in FIG. 7 by any suitable method, such as by manually or mechanically stretching the loop. One preferred method is to utilize needle holders to cinch the loop. For example, the closed jaws of needle holders or a scissor-like tool can be inserted into the loop then opened to stretch the loop. A preferred machine could be a force gauge.

[0029] With continued reference to FIG. 7, the button **4** can be advantageously repositioned from its original position (shown in dashed lines) to a new position (shown in solid lines) at the opposite end of the loop from the original position, or approximately so. This repositioning of the button **4** advantageously allows the lacing tool **7** to traverse through the lumen of the fiber **1**, as shown in FIG. 8. More specifically, second entry **15** and exit **16** points are defined along the fiber **1**. The second exit point **16** can preferably be positioned within close proximity to the end of the retracted cut tail **2** to minimize the amount of external fiber outside the loop lumen while still allowing for an internal overlap, or proximity, between the save tail and cut tail **2** and **3** within the lumen. These second entry **15** and exit **16** points can also be fluffed to allow for the lacing tool **7** to readily enter and exit the fiber **1**. After the second entry **15** and exit **16** points are defined, the barb **10** of the lacing tool **7** is pushed into the lumen of the fiber **1** at the fluffed second entry point **15**. The barb **10** is pushed through the inside of the fiber **1** and guided outward through the fluffed second exit point **16**. In one preferred embodiment, the assembly is essentially finished at this point, with the save tail being cut close to entry point **5**, to avoid having an unnecessary loose end. The reinforcing regions **20** and **21**, noted below, may then be applied, but simply to entry point 5 or to the location of cut end 2.

[0030] The save tail **3** of the 2/3 section is then coupled to the barb **10** and configured to allow the lacing tool **7** and save tail **3** to be pulled back into fiber **1** at the second exit point **16**. The barb **10** and coupled save tail **3** can be pulled out of fiber's lumen at the second entry point **15**. As shown in FIG. 9, this step results with the save tail section **3** being exposed out of the fiber **1**. The exposed save tail **3** is preferably cut near the second entry point **15**, such that a small section of the save tail **3** is still exposed. Cutting can be done utilizing one or more of the following: scissors, knife, cutting instrument, thermal knife, and/or razor blade, and the like while avoiding cutting the external fiber near the second entry point **15**.

[0031] After the save tail **3** is initially cut, it is preferred to manually or mechanically cinch the loop. One preferred method is to utilize needle holders to cinch the loop. For example, the closed jaws of needle holders or a scissor-like tool can be

inserted into the loop then opened to stretch the loop. A preferred machine could be a force gauge. The inner diameter of the loop can be measured to determine how close it is to the final desired size. If needed, the loop can be stretched using tools or machines prior to the stitching/securing steps described below. As a preferred example, the fiber loop can be manually or mechanically stretched to approximately 100 lbs. One type of suitable machine that can be used for this step is a force gauge.

[0032] As shown in FIG. 11, a first stitching section **21** is defined by a section on the fiber 1 that encompasses the first exit point **6** where the cut tail **2** has entered into the lumen. As shown in FIG. 11, a second stitching section **20** is defined by a section on the fiber **1** that encompasses the ends of the cut tail **2** and the save tail **3**. It is important to note that the location of the first and second entry and exit points 5, 6, 15, and 16 on the fiber **1** in FIG. 11 are non-limiting, as they can be positioned closer to each other or at different locations depending on the final size of the assembly. A needle **25** and thread **23**, such as UHMWPE thread, can be used to readily secure the first exit point **6** at the first stitching section **21** and the cut tail **2** and save tail **3** together at stitching section **20**. Additionally, other means for securing or reinforcing sections **20**, **21**, besides stitching, can also readily be used. Non-exclusive examples, of securing or reinforcing means can include one or more adhesives, such as glue, heat setting, crimping. These means can be used by themselves or in conjunction with each other, or in conjunction with stitching.

[0033] After the first section **21**, having the first exit point **6** is stitched, or otherwise secured or reinforced, it is preferred to stitch or otherwise secure the second stitching section **20** where the cut tail **2** and save tail **3** overlap, or are otherwise in close proximity. According to one method, stitching using a needle **25** and thread **23**, such as an UHMWPE thread, can begin below the second entry point **15**, such that the stitching moves in an upwards directions towards the second entry point **15** and the button **4**. Alternatively, and as shown in FIG. 11, the stitching or reinforcing method can be started above the final section **20** and proceed directionally away from the button **4**. FIG. 10 depicts a preferred directional path of stitching along the fiber **1**.

[0034] If the stitching reaches a position adjacently below or above the second entry point **15**, it is preferred to cut off the remaining exposed save tail **3** as close to the second entry point **15** as possible using any suitable cutting instrument, such as a razor blade, while not cutting, and thereby comprising the fiber **1**. Alternatively, this could be the first cut of the exposed save tail **3** as opposed to the second cut. The remaining save tail **3** can be retracted within the lumen of the fiber **1** through the second entry point **15** as shown in FIG. 11. The save tail **3** can be retracted into the fiber using any suitable method, such as by utilizing needle holders, as described above, or by other manual or mechanical methods of stretching the fiber loop. It is preferred that the save tail **3** is retracted within the lumen in close approximation, or on the same side of the loop, as the retracted cut tail **2**. More specifically, and as shown in FIG. 11, the save tail **3** and cut tail **2** are preferably aligned adjacent to each other to create an overlap of about 1/6-1/4 of an inch depending on the final loop size desired (*e.g.*, 15 - 60mm). Additionally, the ends of the cut tail **2** and save tail **3** can be adjacent to each other, or alternatively there could be a small gap between the cut tail **2** and save tail **3**.

[0035] Once the save tail **3** is fully retracted within the lumen, and positioned overlapping or near the cut tail **2**, it is preferred to finalize the stitching in the second section **20**. Stitching, or otherwise securing, the cut tail **2** and save tail **3** together helps prevent fraying of the fiber **1.** **As** with the first section **21**, the second section **20** can be secured or reinforced utilizing other means besides thread and needles stitching. Non-exclusive examples, of securing means can include one or more adhesives, such as glue, heat setting, crimping. These means can be used by themselves or in conjunction with each other, or in conjunction with stitching. According to other embodiments, the save tail **3** can first be retracted within the lumen, and then stitching or securing of the second section **20** can begin**.** Stitching or securing of the second section **20** advantageously secures the cut tail **2** and save tail **3** together within the braid **1** and to the braided fiber **1**.

[0036] FIG. 12 depicts a preferred loop button assembly **22** after stitching or otherwise securing/reinforcing the two stitched sections **21**, **20**. More specifically, it is preferred to reposition the button **4** along the fiber **1**, if needed, such that first stitched

section **21** is positioned adjacent to, and directly below the button **4** and the second stitched section **20** is positioned on the fiber **1** at the opposite end of the assembly **22** from the button **4**. This preferred configuration between the button **4** and the stitched sections **20**, **21** provides advantageous tensile strength and durability, although the assembly **22** can be manipulated such that the button **4** is positioned along other locations with respect to the stitched sections **20**, **21**. Preferred loops of the final assembly **22** do not include connection point that creates a figure-8 shape with a distal and proximal loop separated from each other. The final loop is preferably smooth, as one continuous strand, without significant protrusions, segmentation, divisions, and more specifically is in an ovular or circular shape.

[0037] According to certain embodiments, the assembly **22** can have only one stitched or reinforced section **20** or **21**, and no more. This single reinforced section can be the section shown in **21** that covers the first exit point **6**, where the cut tail **2** enters into the lumen of the fiber **1**. Under this embodiment, the ends of the cut tail **2** and save tail **3** would not be connected within the lumen of the fiber **1**. Alternatively, the single stitched or reinforced section can be the second section **20** that encompasses the cut tail **2** and save tail **3** junction within the lumen, without reinforcing the first exit point **6.** Additional embodiments include having one or more of the reinforced sections **20** and **21** to be doubly stitched.

[0038] Alternative means of inserting the cut tail **2** and the save tail **3** into the lumen of the fiber **1** to achieve a similar final assembly are also readily contemplated herein. For example, a needle or other tool can be used to guide and insert the cut tail **2** and/or save tail **3** directly into the lumen of the fiber **1** without have the tool first being inserted into the lumen. According to alternative embodiments, the cut tail **2** and save tail **3** could be inserted within the lumen and left within, without having the ends first pulled out, cut, and retracted as described above. This could be done with the step of cinching/stretching out the loop, as described above. It is preferred that the cut tail **2** and save tail **3** are inserted substantially within the lumen, and not just their ends. More specifically, it is preferred that the entire circumference of the lumen, or substantially so,

is occupied with either the cut tail **2** or save tail **3**, or both with respects to overlapping between the two.

[0039] It is preferred that the assembly **22** is re-measured and re-stretched (*e.g.,* at approximately 100 lbs.) if needed to achieve the final desired loop size.

Working Examples

[0040] Cyclic load testing was performed on various loop button assemblies manufactured according to the teachings herein. More specifically, four different types of loop button assemblies were made: (*a*) an assembly having a single stitched section covering the entry point of the cut tail into the lumen and positioned below the button (corresponding to section **21**), (*b*) an assembly having a single stitched section connecting the cut tail and the save tail within the lumen, opposite of the button, (corresponding to section **20**), (*c*) an assembly having two stitched sections, a first covering the entry point of the cut tail into the lumen and a second connecting the cut tail and the save tail within the lumen, opposite of the button (corresponding to section **21** and **20**), and (*d*) an assembly having only one stitched section covering the entry point of the cut tail into the lumen and positioned below the button (corresponding to section **21**), with said section being doubly stitched. The final fiber of the tested assemblies had a 15mm circumference.

[0041] The loop button assemblies were coupled to an INSTRON® automated mechanical tension testing machine configured to apply cyclical mechanical stress (*i.e,* pulling) on the assemblies to test for tensile strength. After a cycle count of 1,000, with an average load of 1,012 N and a load at maximum tensile extension of 1,018 N, fiber loop (*c*) remained intact and unbroken. Applicants then tested a new 15mm (*c*) loop button assembly, constructed in the same manner as the previous assembly described above, to establish a failure point. The loop broke after a cycle count of 3987, with an average load of 1,013 N, and a load at maximum tensile strength of 1,020 N. A second (*d*) loop was tested and broke after a cycle count of 4943. A (*a*), (*b*), and (*d*) loop

assemblies were tested similarly and broke after the following cycle counts (*a*): 2872, (*b*): 3529 and (*d*): 5,098.

[0042] A comparison was made with a market leading loop button assembly, a 15mm ENDOBUTTON® available from SMITH & NEPHEW®. In contrast to the loop button assemblies made according to the teachings herein, the thread of the ENDOBUTTON® broke after only a cycle count of 27, with an average load of 865 N and a load at maximum tensile extension of 1,005 N.

[0043] These tests established that the assemblies made according to the teachings provided herein were substantially stronger than a market leading loop button assembly.

[0044] All references listed herein are expressly incorporated by reference in their entireties. The invention may be embodied in other specific forms besides and beyond those described herein. The foregoing embodiments are therefore to be considered in all respects illustrative rather than limiting, and the scope of the invention is defined and limited only by the appended claims and their equivalents, rather than by the foregoing description.

INDUSTRIAL APPLICABILITY

[0045] The embodiments have industrial applicability in the field of bone-tendon-bone, single-bundle soft tissue, and double-bundle soft tissue fixation assemblies.

WHAT IS CLAIMED IS:

1. A method of making a continuous loop fixation assembly comprising:

providing an anchor button having an aperture;

threading an open fiber having a lumen through the aperture of the button thereby defining first and second sections of the fiber separated by the button, wherein the first fiber section comprises a cut tail and the second fiber section comprises a save tail;

inserting the cut tail within the lumen of the fiber at a first position to form a loop; and

reinforcing a first section of the loop that includes the first position where the cut tail was inserted into the lumen of the fiber.

2. The method of claim 1, wherein prior to the step of reinforcing a first section, the save tail is inserted into the lumen of the fiber at a second position, so that the cut tail and the save tail are both inside the lumen.

3. The method of Claim 2, further comprising reinforcing a second section of the loop that fixates the cut tail and save tail together within the fiber.

4. The method of Claim 3, wherein the button is positioned adjacently above the first reinforced section of the loop and at the opposite end of the loop from the second reinforced section.

5. The method of Claim 3, wherein the first and second reinforced sections of the loop are stitched.

6. The method of Claim 2, wherein the cut tail and the save tail are inserted into the lumen with a lacing tool.

7. The method of Claim 6, further comprising:
inserting the lacing tool into the lumen at a first entry point in the fiber;
pushing the lacing tool out at a first exit point in the fiber;
coupling the cut tail to the lacing tool;
pulling the lacing tool to insert the cut tail into the lumen of the fiber;
inserting the lacing tool into the lumen at a second entry point in the fiber;
pushing the lacing tool out at a second exit point in the fiber;
coupling the save tail to the lacing tool; and
pulling the lacing tool to insert the save tail into the lumen of the fiber.

8. The method of Claim 7, wherein the end of the cut tail coupled to the lacing tool is pulled out of the lumen through the first entry point and the end of the save tail coupled to the lacing tool is pulled out of the lumen through the second entry point, and further comprising retracting the cut tail and save tail back into the lumen.

9. The method of Claim 2, wherein the cut tail and save tail occupy the entire circumference of the loop's lumen, or substantially so.

10. A method of making a continuous loop fixation assembly comprising:
providing an anchor button having an aperture;
threading an open fiber having a lumen through the aperture of the button thereby defining first and second sections of the fiber separated by the button, wherein the first fiber section comprises a cut tail and the second fiber section comprises a save tail;
inserting the cut tail within the lumen of the fiber at a first position to form a loop; and
reinforcing a first section of the loop that fixates the cut tail within the fiber.

11. The method of claim 10 further wherein prior to the step of reinforcing a first section the save tail is inserted into the lumen at a second position and wherein the step of reinforcing a first section also fixates the save tail within the fiber.

12. An implantable continuous loop assembly for graft fixation comprising:

an anchor button having an aperture;

a closed loop of braided fiber having a lumen and a first tail end threaded into the lumen at a first position to create an overlapped loop, wherein the closed loop of braided fiber passes through the aperture of the anchor button, such that the intact anchor button cannot be removed from the closed loop of fiber without breaking the loop of fiber; and

a first reinforced section of fiber covering the first position where the first tail end is threaded into the lumen.

13. The implantable continuous loop assembly of claim 12, wherein a second tail end is threaded into the lumen at a second position.

14. The implantable continuous loop assembly of Claim 13, further comprising a second reinforced section of fiber that couples the first and second tail ends together within the lumen.

15. The implantable continuous loop assembly of Claim 14, wherein the first and second reinforced sections are stitched.

16. The implantable continuous loop assembly of Claim 14, wherein the button is positioned adjacently above the first reinforced section of the loop and at the opposite end of the loop from the second reinforced section.

17. The implantable continuous loop assembly of Claim 14, wherein the save tail and the cut tail occupy the entire circumference of the loop's lumen, or substantially so.

18. The implantable continuous loop of Claim 1, wherein the fiber is braided ultra high molecular weight polyethylene.

19. An implantable continuous loop assembly for graft fixation comprising:

an anchor button having an aperture;

a closed loop of braided fiber having a lumen and first and second tail ends threaded into the lumen at first and second positions to create an overlapped loop, wherein the closed loop of braided fiber passes through the aperture of the anchor button, such that the intact anchor button cannot be removed from the closed loop of fiber without breaking the loop of fiber; and

a first reinforced section of fiber that couples the first and second tail ends together within the lumen.

AMENDED CLAIMS
received by the International Bureau on October 23 2013 (23.10.2013)

1. A method of making a continuous loop fixation assembly comprising:

providing an anchor button having an aperture;

threading an open fiber having a lumen through the aperture of the button thereby defining first and second sections of the fiber separated by the button, wherein the first fiber section comprises a cut tail and the second fiber section comprises a save tail;

inserting the cut tail within the lumen of the fiber at a first position to form a loop; and

reinforcing a first section of the loop that includes the first position where the cut tail was inserted into the lumen of the fiber.

2. The method of claim 1, wherein prior to the step of reinforcing a first section, the save tail is inserted into the lumen of the fiber at a second position, so that the cut tail and the save tail are both inside the lumen.

3. The method of Claim 2, further comprising reinforcing a second section of the loop that fixates the cut tail and save tail together within the fiber.

4. The method of Claim 3, wherein the button is positioned adjacently above the first reinforced section of the loop and at the opposite end of the loop from the second reinforced section.

5. The method of Claim 3, wherein the first and second reinforced sections of the loop are stitched.

6. The method of Claim 2, wherein the cut tail and the save tail are inserted into the lumen with a lacing tool.

7. The method of Claim 6, further comprising:
inserting the lacing tool into the lumen at a first entry point in the fiber;
pushing the lacing tool out at a first exit point in the fiber;
coupling the cut tail to the lacing tool;
pulling the lacing tool to insert the cut tail into the lumen of the fiber;
inserting the lacing tool into the lumen at a second entry point in the fiber;
pushing the lacing tool out at a second exit point in the fiber;
coupling the save tail to the lacing tool; and
pulling the lacing tool to insert the save tail into the lumen of the fiber.

8. The method of Claim 7, wherein the end of the cut tail coupled to the lacing tool is pulled out of the lumen through the first entry point and the end of the save tail coupled to the lacing tool is pulled out of the lumen through the second entry point, and further comprising retracting the cut tail and save tail back into the lumen.

9. The method of Claim 2, wherein the cut tail and save tail occupy the entire circumference of the loop's lumen, or substantially so.

10. A method of making a continuous loop fixation assembly comprising:
providing an anchor button having an aperture;
threading an open fiber having a lumen through the aperture of the button thereby defining first and second sections of the fiber separated by the button, wherein the first fiber section comprises a cut tail and the second fiber section comprises a save tail;
inserting the cut tail within the lumen of the fiber at a first position to form a loop; and
reinforcing a first section of the loop that fixates the cut tail within the fiber.

AMENDED SHEET (ARTICLE 19)

11. The method of claim 10 further wherein prior to the step of reinforcing a first section the save tail is inserted into the lumen at a second position and wherein the step of reinforcing a first section also fixates the save tail within the fiber.

12. An implantable continuous loop assembly for graft fixation comprising:

an anchor button having an aperture;

a closed loop of braided fiber having a lumen and a first tail end threaded into the lumen at a first position to create an overlapped loop, wherein the closed loop of braided fiber passes through the aperture of the anchor button, such that the intact anchor button cannot be removed from the closed loop of fiber without breaking the loop of fiber; and

a first reinforced section of fiber covering the first position where the first tail end is threaded into the lumen.

13. The implantable continuous loop assembly of claim 12, wherein a second tail end is threaded into the lumen at a second position.

14. The implantable continuous loop assembly of Claim 13, further comprising a second reinforced section of fiber that couples the first and second tail ends together within the lumen.

15. The implantable continuous loop assembly of Claim 14, wherein the first and second reinforced sections are stitched.

16. The implantable continuous loop assembly of Claim 14, wherein the button is positioned adjacently above the first reinforced section of the loop and at the opposite end of the loop from the second reinforced section.

17. The implantable continuous loop assembly of Claim 14, wherein the save tail and the cut tail occupy the entire circumference of the loop's lumen, or substantially so.

18. The implantable continuous loop of Claim 14, wherein the fiber is braided ultra high molecular weight polyethylene.

19. An implantable continuous loop assembly for graft fixation comprising:

an anchor button having an aperture;

a closed loop of braided fiber having a lumen and first and second tail ends threaded into the lumen at first and second positions to create an overlapped loop, wherein the closed loop of braided fiber passes through the aperture of the anchor button, such that the intact anchor button cannot be removed from the closed loop of fiber without breaking the loop of fiber; and

a first reinforced section of fiber that couples the first and second tail ends together within the lumen.

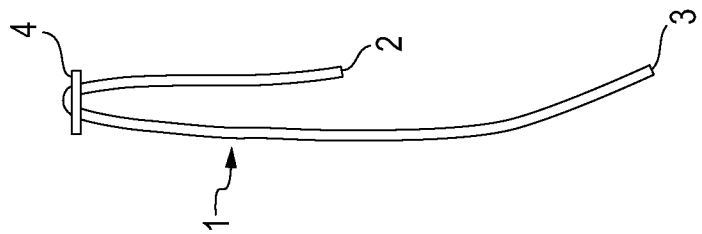

Fig. 1

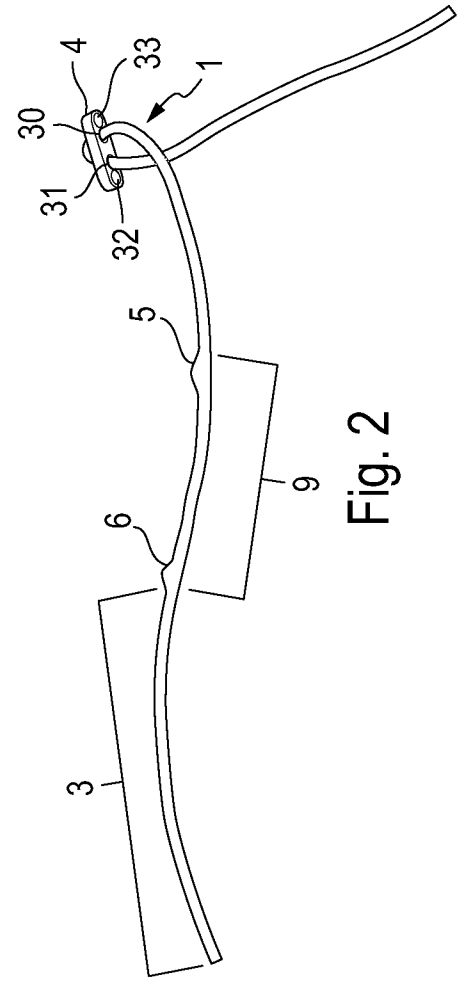

Fig. 2

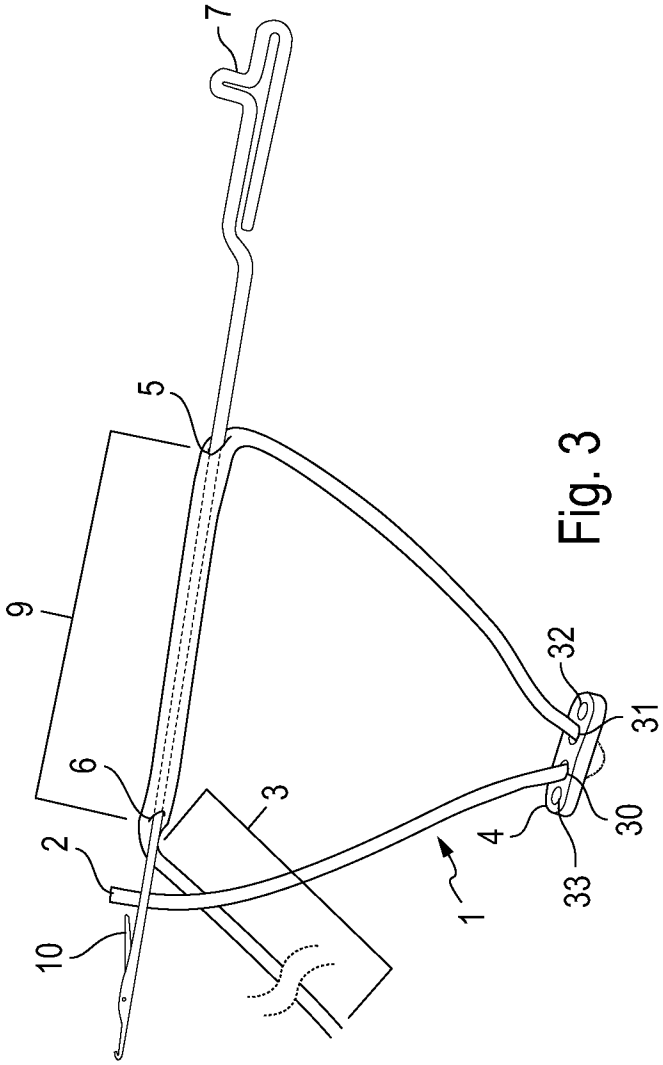

Fig. 3

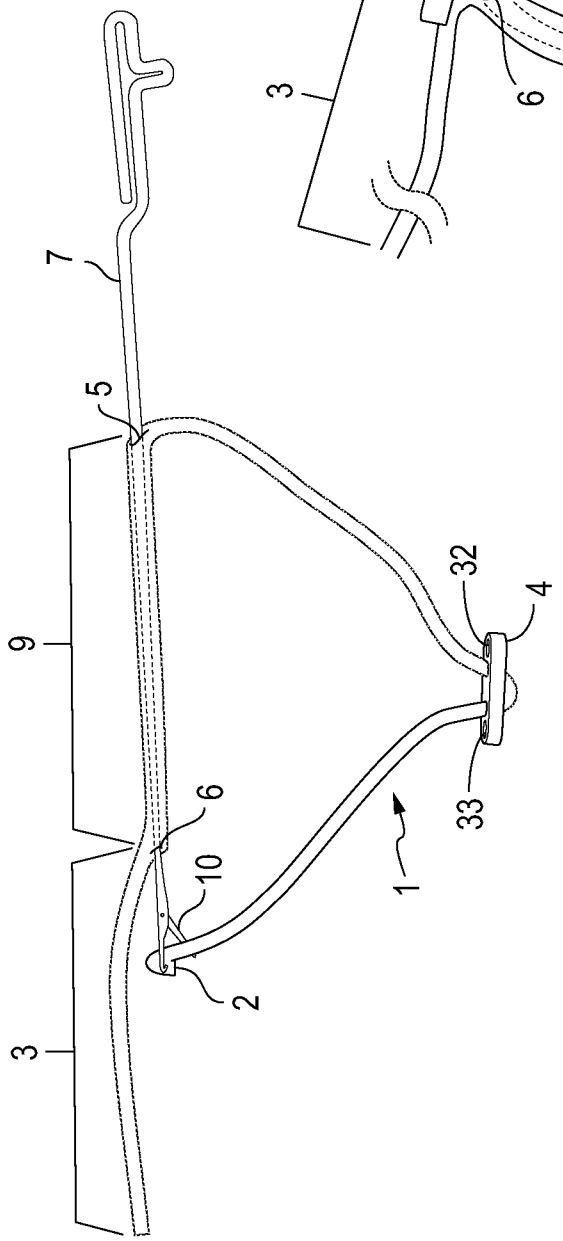

Fig. 4

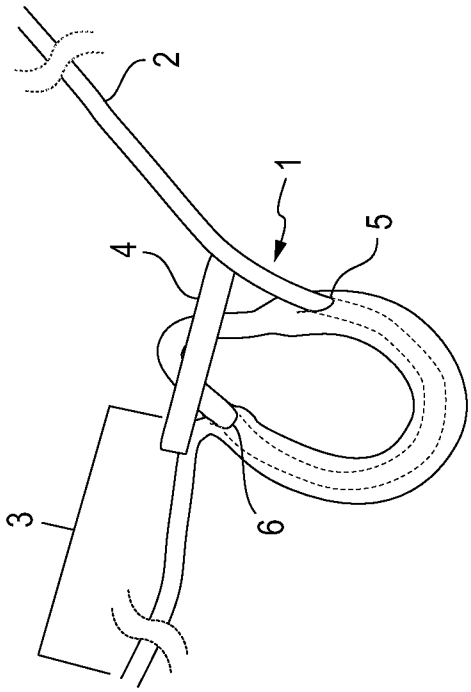

Fig. 6

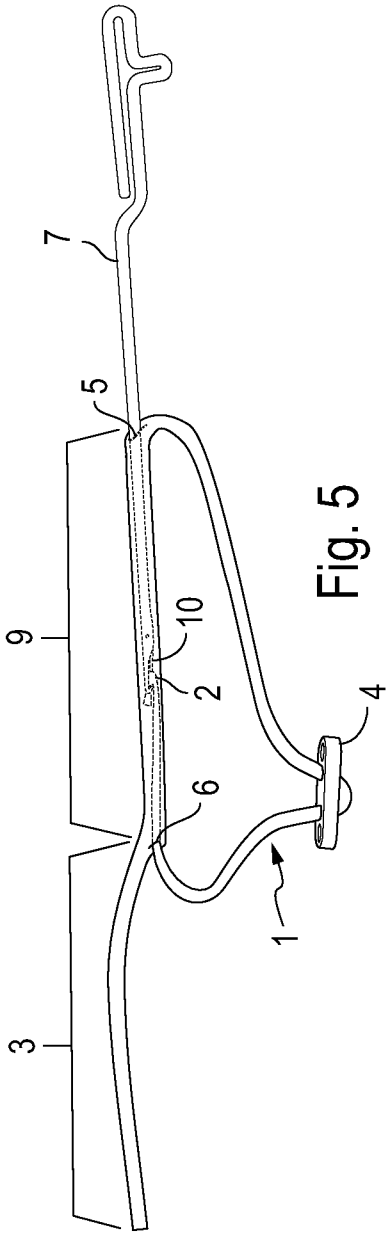

Fig. 5

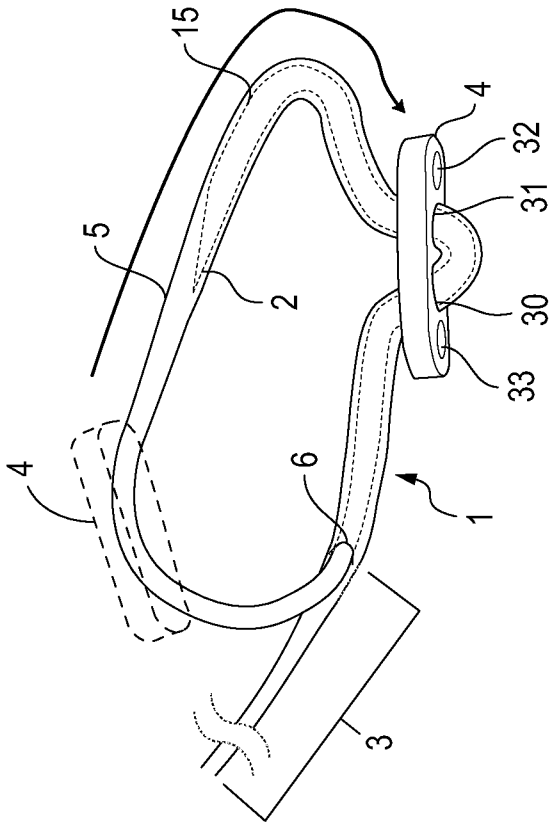

Fig. 7

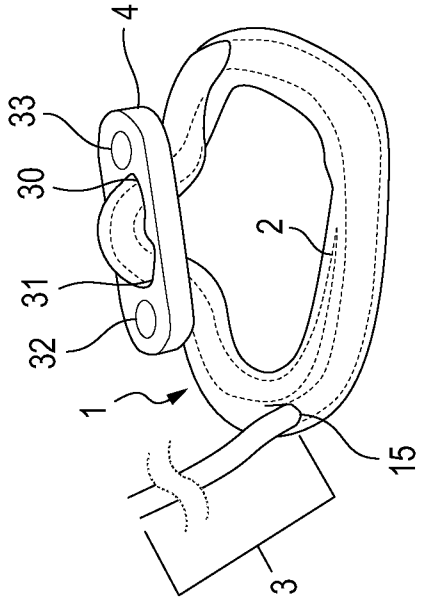

Fig. 9

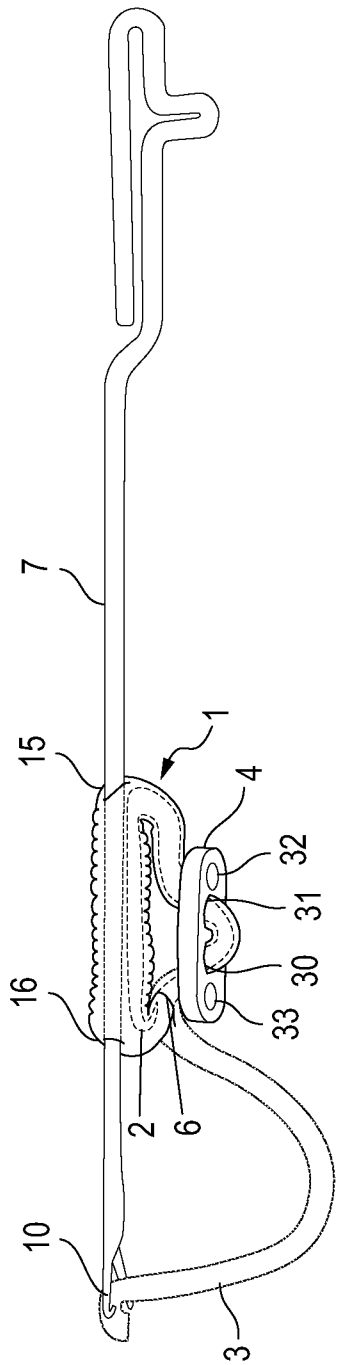

Fig. 8

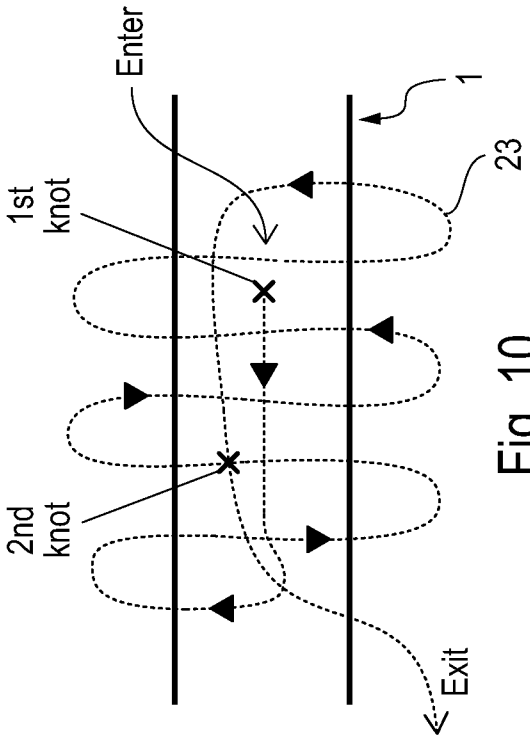

Fig. 10

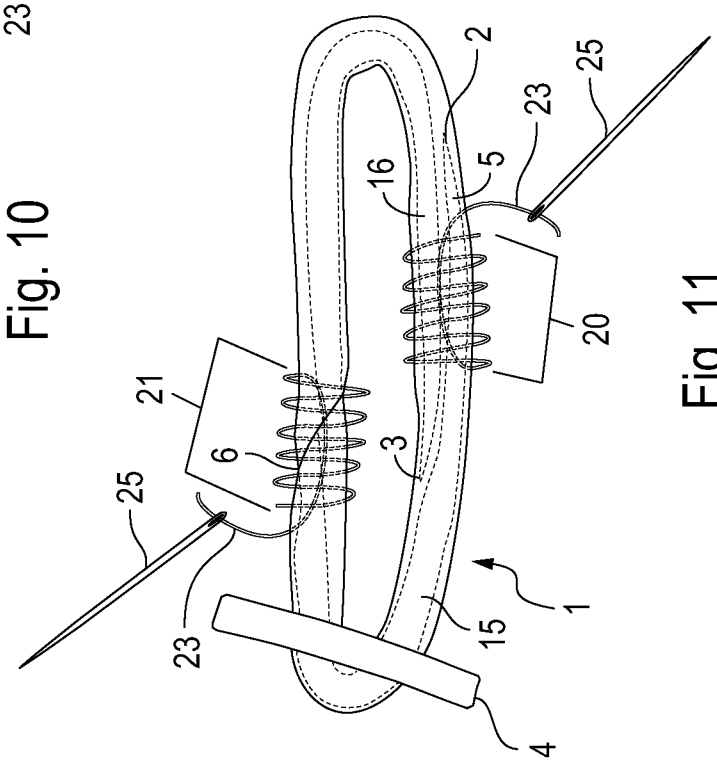

Fig. 11

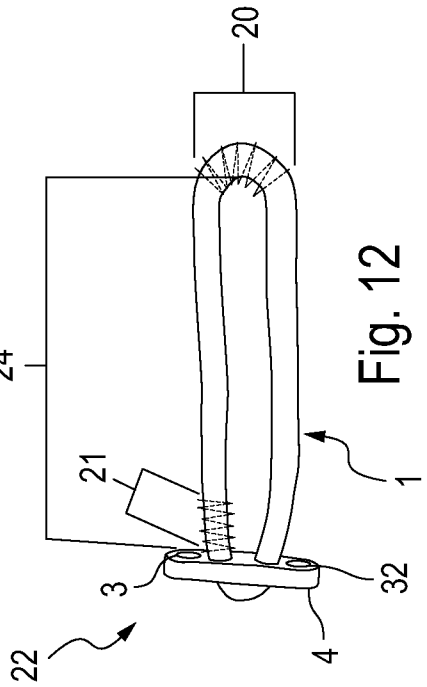

Fig. 12

INTERNATIONAL SEARCH REPORT

International application No.
PCT/US2013/042310

A. CLASSIFICATION OF SUBJECT MATTER

A61B 17/04(2006.01)i, A61B 17/115(2006.01)i, A61L 17/10(2006.01)i

According to International Patent Classification (IPC) or to both national classification and IPC

B. FIELDS SEARCHED

Minimum documentation searched (classification system followed by classification symbols)
A61B 17/04; A61F 2/08; A61B 17/06; A61B 19/00; A61B 17/115; A61L 17/10

Documentation searched other than minimum documentation to the extent that such documents are included in the fields searched
Korean utility models and applications for utility models
Japanese utility models and applications for utility models

Electronic data base consulted during the international search (name of data base and, where practicable, search terms used)
eKOMPASS(KIPO internal) & Keywords: suture, overlapped loop, button, reconstruction, knotless, bone, assembly

C. DOCUMENTS CONSIDERED TO BE RELEVANT

Category*	Citation of document, with indication, where appropriate, of the relevant passages	Relevant to claim No.
X	US 2012-0123541 A1 (ALBERTORIO, RICARDO et al.) 17 May 2012 See paragraphs [0032]-[0045]; claims 1-8; Figures 1-6 & 17-46.	1,12-13,18
A		2-11,14-17,19
A	US 2010-0268273 A1 (ALBERTORIO, RICARDO et al.) 21 October 2010 See paragraphs [0010]-[0023] & [0037]-[0044]; claim 1-13; Figures 1-40.	1-19
A	US 2008-0177302 A1 (SHURNAS, PAUL J.) 24 July 2008 See abstract; claims 1-14; Figures 1-6C.	1-19
A	US 2012-0046746 A1 (KONICEK, JOHN) 23 February 2012 See abstract; claims 1-30; Figures 1-8D.	1-19
A	US 2011-0087280 A1 (ALBERTORIO, RICARDO) 14 April 2011 See abstract; claims 1-32; Figures 5-18.	1-19
A	US 6533802 B2 (BOJARSKI, RAYMOND A. et al.) 18 March 2003 See abstract; claims 25-37; Figures 1-20.	1-19

☐ Further documents are listed in the continuation of Box C.

☒ See patent family annex.

* Special categories of cited documents:
"A" document defining the general state of the art which is not considered to be of particular relevance
"E" earlier application or patent but published on or after the international filing date
"L" document which may throw doubts on priority claim(s) or which is cited to establish the publication date of citation or other special reason (as specified)
"O" document referring to an oral disclosure, use, exhibition or other means
"P" document published prior to the international filing date but later than the priority date claimed
"T" later document published after the international filing date or priority date and not in conflict with the application but cited to understand the principle or theory underlying the invention
"X" document of particular relevance; the claimed invention cannot be considered novel or cannot be considered to involve an inventive step when the document is taken alone
"Y" document of particular relevance; the claimed invention cannot be considered to involve an inventive step when the document is combined with one or more other such documents,such combination being obvious to a person skilled in the art
"&" document member of the same patent family

Date of the actual completion of the international search	Date of mailing of the international search report
03 September 2013 (03.09.2013)	**04 September 2013 (04.09.2013)**

Name and mailing address of the ISA/KR
Korean Intellectual Property Office
189 Cheongsa-ro, Seo-gu, Daejeon Metropolitan City, 302-701, Republic of Korea
Facsimile No. +82-42-472-7140

Authorized officer
KIM Dong Seok
Telephone No. +82-42-481-8647

INTERNATIONAL SEARCH REPORT

Information on patent family members

International application No.
PCT/US2013/042310

Patent document cited in search report	Publication date	Patent family member(s)	Publication date
US 2012-0123541 A1	17/05/2012	EP 2455001 A2	23/05/2012
US 2010-0268273 A1	21/10/2010	EP 2238944 A2	13/10/2010
		EP 2238944 A3	28/03/2012
		US 2010-0256677 A1	07/10/2010
		US 8439976 B2	14/05/2013
		US 8460379 B2	11/06/2013
US 2008-0177302 A1	24/07/2008	US 2011-0130789 A1	02/06/2011
		US 7901431 B2	08/03/2011
		US 8221455 B2	17/07/2012
US 2012-0046746 A1	23/02/2012	None	
US 2011-0087280 A1	14/04/2011	EP 2311383 A1	20/04/2011
US 6533802 B2	18/03/2003	AT 502601 T	15/04/2011
		AU 2002-303722 B2	02/11/2006
		AU 2006-225257 A1	26/10/2006
		CA 2446999 A1	21/11/2002
		DE 60239526 D1	05/05/2011
		EP 1387650 A1	11/02/2004
		EP 1387650 B1	23/03/2011
		EP 2191791 A2	02/06/2010
		EP 2191791 A3	22/08/2012
		JP 2004-528121 A	16/09/2004
		JP 4180926 B2	12/11/2008
		US 2002-0173788 A1	21/11/2002
		US 2004-0015171 A1	22/01/2004
		US 2005-0038427 A1	17/02/2005
		US 2008-0287991 A1	20/11/2008
		US 7530990 B2	12/05/2009
		WO 02-91959 A1	21/11/2002