Sept. 27, 1960 T. M. KNOWLAND 2,953,813

CONTROLLING MECHANISM FOR PRESSURE BAND

Filed Dec. 26, 1956 2 Sheets-Sheet 1

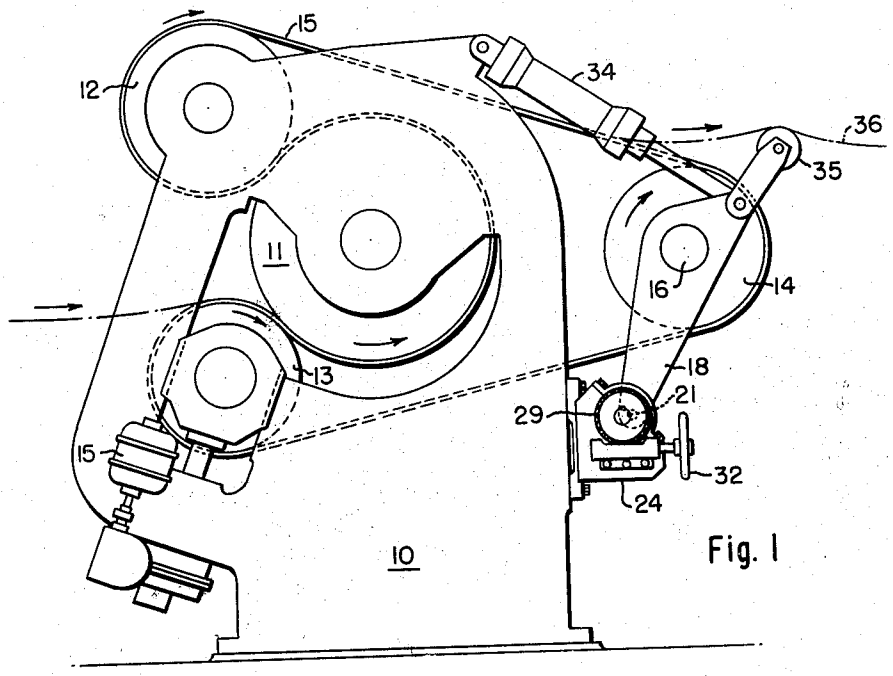

Fig. 1

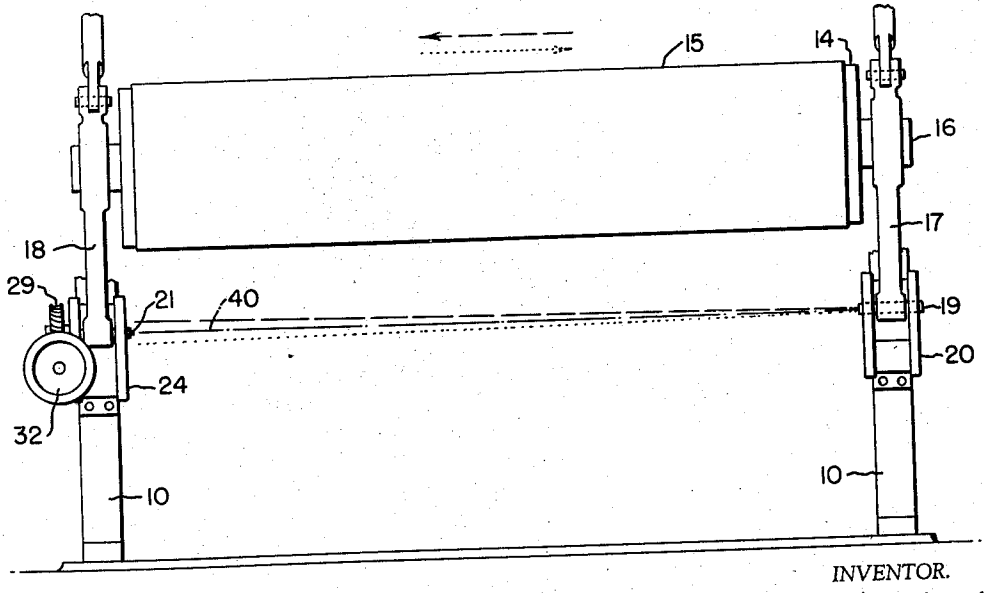

Fig. 2

INVENTOR.

Thomas M. Knowland.

BY

Kenway, Jenney, Witter & Hildreth.

Att'ys.

Sept. 27, 1960 T. M. KNOWLAND 2,953,813

CONTROLLING MECHANISM FOR PRESSURE BAND

Filed Dec. 26, 1956 2 Sheets-Sheet 2

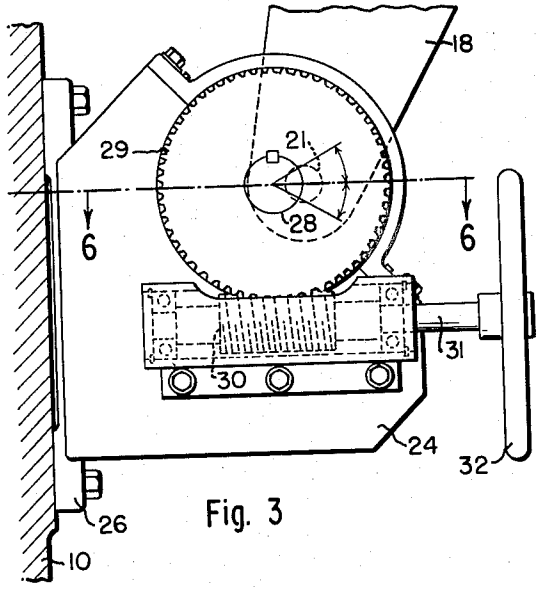

Fig. 3

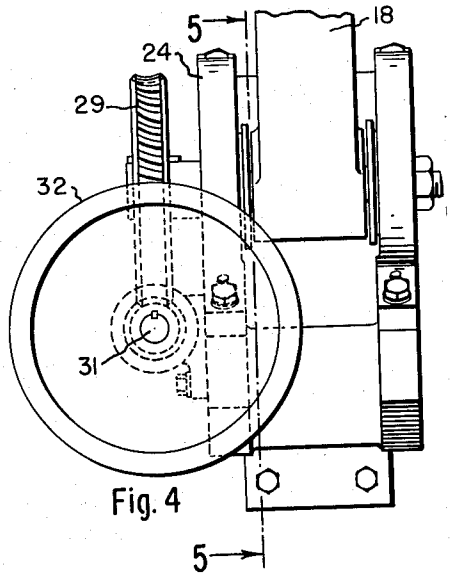

Fig. 4

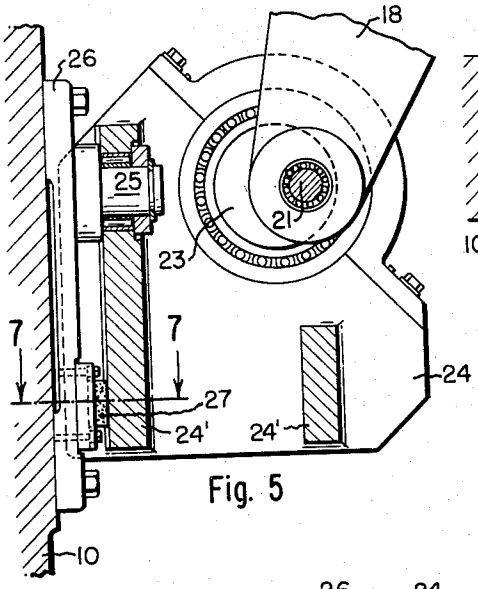

Fig. 5

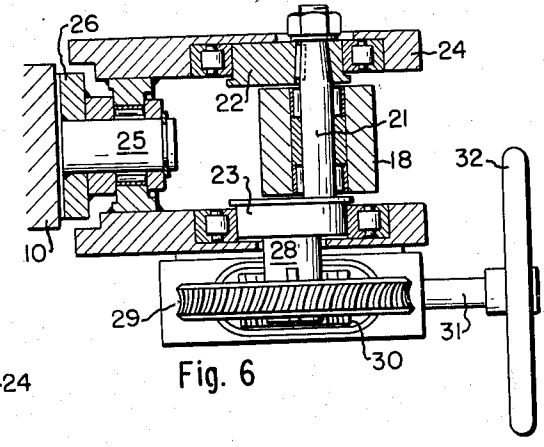

Fig. 6

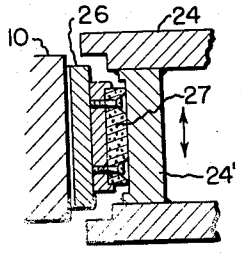

Fig. 7

INVENTOR.
Thomas M. Knowland.
BY
Kenway, Jenney, Witter & Hildreth.
Attys.

United States Patent Office 2,953,813 Patented Sept. 27, 1960

2,953,813

CONTROLLING MECHANISM FOR PRESSURE BAND

Thomas M. Knowland, Belmont, Mass., assignor, by mesne assignments, to American Biltrite Rubber Company, Inc., a corporation of Delaware

Filed Dec. 26, 1956, Ser. No. 630,586

4 Claims. (Cl. 18—6)

This invention comprises improvements in machines for curing or vulcanizing rubber or plastic compounds in sheet form and which include in their structure a rotary cylinder, a cooperating pressure band and guide rolls arranged to lead the band in a substantially triangular path including a partial encirclement of the cylinder.

In machines of this type difficulty has been encountered under some circumstances in maintaining true running of the pressure band. Loss of time and annoyance have been caused by the tendency of the pressure band to drift or work toward one edge or other of the cylinder as it rotates hour after hour in operation. Attempts to confine the pressure band forcibly to the true path have not proved practicable because they tend to deform the band itself and to create excessive and undesirable friction. Other attempts to solve the problem have been made by providing for adjustment of one of the guide rolls angularly in a horizontal plane and while this expedient has been successfully practiced it has certain disadvantages besides not being adapted for the latest type of machines such as that disclosed in United States Letters Patent 2,656,565, Apel and Collins, wherein the tension-exerting guide roll is supported by bearing arms pivoted to swing about a horizontal axis.

I have discovered that an extremely accurate and sensitive control of the path of the pressure band may be achieved by providing means for adjusting one of the bearing arms of the roll in a direction at substantially right angles to the line of pressure between the cylinder and the guide roll or as herein shown in a vertical direction. It has been found that when a single bearing of the tension roll is vertically displaced downwardly in relation to the opposite bearing the pressure band as it approaches the roll will be led to travel laterally away from the bearing that has been dropped. Conversely, it has been found that when the same bearing is displaced vertically upwardly the pressure band will begin to travel laterally toward the raised bearing. The effect of such adjustment is to vary the angle of approach of the band to the tension roll and thus to cause the band to travel in the desired selected direction. Moreover, this takes place without straining the marginal portions of the band beyond the elastic limit, an occurrence which will eventually destroy the useful life of the band.

An object of the invention is to provide mechanism which may be easily operated at all times for effecting the desired adjustment under the tremendous pressure and weight of moving parts always subjected to a hydraulically developed tension of as much as 30 to 40 tons in the steel pressure band. This in some instances is 72" in width. Such a band is the subject-matter of United States Patent No. 2,083,257, Bierer.

A construction of band controlling mechanism which has proved satisfactory under these severe conditions includes in its organization a roll-supporting arm mounted to rock upon a pivot pin carried eccentrically by a pair of spaced disks which furnish support for both ends of

the pin and by their rotation adjust its position and the roll-supporting arm.

These and other features of the invention will be best understood and appreciated from the following description of preferred embodiments thereof selected for purposes of illustration and shown in the accompanying drawings in which:

Fig. 1 is a view of the entire machine in side elevation,

Fig. 2 is a view of the machine in rear elevation, and

Figs. 3–7 are detailed views of the mechanism for vertically adjusting one of the bearing arms of the tension roll.

The machine herein shown is in general construction similar to that of United States Letters Patent 2,656,565 mentioned above to which reference may be had for further details of construction.

As herein shown the machine comprises a main frame **10** in which a heated cylinder **11** is journaled for rotation about a horizontal axis. Guide rolls **12**, **13** and **14** are mounted upon the frame in such position as to guide a steel pressure band **15** in a substantially triangular course which includes partial encirclement of the cylinder **11**. The roll **12** is mounted to rotate about a stationary axis. The roll **13** is driven through suitable connections by a motor **15** and is bodily movable toward and from the cylinder **11** to regulate the entering pressure at the bite of the band and cylinder upon the uncured stock as it enters the machine. The vulcanizing or curing operation is effected as the material passes about the circumference of the cylinder **11** while subjected to pressure against the cylinder by the pressure band **15**.

The tension roll **14** has a shaft **16** and this is supported normally for rotation about a horizontal axis at substantially the same level as the axis of the cylinder by bearing arms **17** and **18**. The arm **17** which is on the right side of the machine as shown in Fig. 2 is supported by a short shaft **19** carried by a bracket **20** bolted in stationary position to the frame **10**. The bearing arm **18** is supported by a pin **21** best shown in Fig. 6 carried eccentrically by and between a pair of flanged disks **22** and **23**. These disks are mounted on roller bearings in the arms of a forked bracket **24** having connecting strengthening webs **24'** and the pin **21** is supported at its opposite ends by the spaced disks. The bracket itself is suspended upon a stud **25** which projects horizontally from a pad **26** bolted to the frame **10**. Roller bearings are interposed between the stud **25** and the bracket, thus permitting a slight rocking of the bracket in accommodating vertical adjustment of the bearing arm **18**. A lubricating thrust block **27** is secured to the pad **26** in position to engage the web **24'** of the bracket near its lower edge.

The flanged disk **23** from which projects the eccentric pin **21** is itself provided with an outwardly extending shaft **28** to which is keyed a worm wheel **29**. This in turn meshes with a worm **30** which is enclosed in a casing bolted to one side of the bracket **24** and provided with an outwardly extending shaft **31** terminating in a hand wheel **32**. It will be seen that by turning this hand wheel the disk **23** will be rotated and the eccentric pin **21** lifted or lowered as the case may be. The flanged disk **22** will be correspondingly rotated by the eccentric pin **21** and thus both ends of the pin are evenly supported in all positions of adjustment.

The amplitude of adjustment required to shift the path of travel of the pressure band **15** is slight but if desired self-aligning bearings may be provided for the shaft **16** where it is supported by the pivoted arm **17**.

The arms **17** and **18** are connected to hydraulic cylinders **34** and these are pivotally connected at one end to the top of the frame **10** and act to maintain continuous outward thrust upon the bearing arms and so to subject

the pressure band 15 to substantial extension. The arms 17 and 18 are provided with outward extensions in which is journaled a guide roll 35 acting to deflect the cured or vulcanized sheet from the pressure band 15 at the conclusion of the curing or vulcanizing operation.

It will be apparent from the foregoing description that the adjustment provided for the roll 14 is in a direction at substantially right angles to the line between the axes of the cylinder 11 and the roll 14, this being the line of resultant pressure caused by the band tension. Adjustment of this type is effective to change the angle of approach of the pressure band to this roll 14 by twisting the band without appreciably stretching either marginal edge therefor.

Having thus disclosed my invention and described in detail an illustrative embodiment thereof, I claim as new and desire to secure by Letters Patent:

1. Band controlling mechanism for a vulcanizing machine or the like having a heated cylinder rotatable about a horizontal axis, an endless pressure band and guide rolls arranged to lead the band in a path including a partial encirclement of the cylinder; said mechanism comprising pivotally mounted roll-carrying arms, fluid pressure means for swinging said arms in a direction away from the cylinder thereby maintaining the band under substantial linear tension, and means for raising and lowering one of said arms thereby causing the guide roll to twist the band transversely without elongating either edge thereof.

2. Band controlling mechanism as defined in claim 1, further characterized in that the means for raising and lowering the said roll-carrying arm comprises a forked bracket carrying spaced flanged disks, a pivot pin for the arm eccentrically secured to said disks, and worm and wheel mechanism for rotating the disks for adjusting the position of the said pivot pin.

3. Band controlling mechanism as defined in claim 1, further characterized in that the means for raising and lowering the roll-carrying arm comprises a bracket pivotally mounted for movement about an axis at right angles to the axis of the arm and having a lubricating thrust block supporting it at a distance from its pivotal axis.

4. Band controlling mechanism as defined in claim 1, further characterized in that the means for raising and lowering the roll-carrying arm comprises a forked bracket having a pair of disks mounted on roller bearings in spaced relation therein and connected by an eccentric pivot pin, a worm wheel connected to one of said disks, and a manually operable worm meshing with the said worm wheel.

References Cited in the file of this patent

UNITED STATES PATENTS

120,949	Doane et al.	Nov. 14, 1871
330,977	Hanney	Nov. 24, 1885
1,662,229	Ballot	Mar. 13, 1928
1,818,685	Brunk	Aug. 11, 1931
2,110,076	Bierer	Mar. 1, 1938
2,199,893	Norton et al.	May 7, 1940
2,366,527	Heath	Jan. 2, 1945
2,439,251	Hornbostel	Apr. 6, 1948
2,439,779	Marcy	Apr. 13, 1948
2,505,958	Grierson	May 2, 1950
2,591,995	Apel et al.	Apr. 8, 1952
2,656,565	Apel et al.	Oct. 27, 1953