No. 613,592. Patented Nov. 1, 1898.

J. J. NAGLEY.

DOOR GUARD.

(Application filed Feb. 5, 1898.)

(No Model.)

Fig 1.

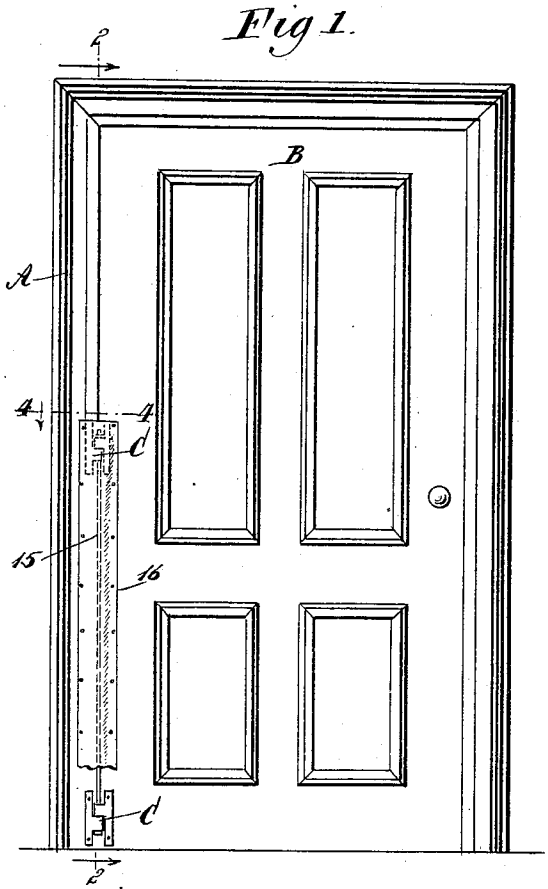

Fig 2.

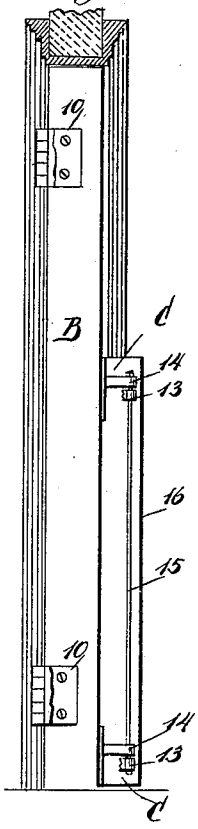

Fig 6.

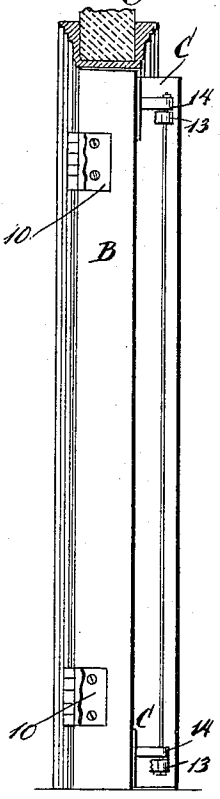

Fig 3.

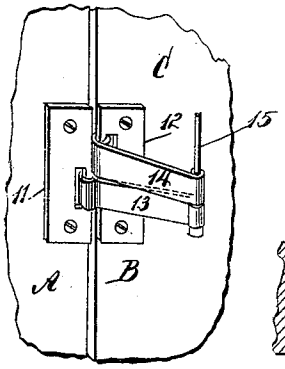

Fig 4.

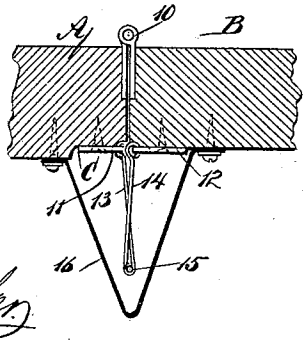

Fig 5.

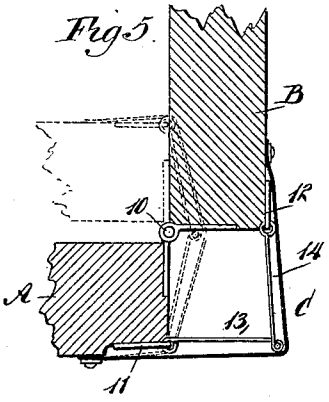

WITNESSES:

Paul Johst

J. Fred Acker

INVENTOR

J. J. Nagley

BY

Munn & Co

ATTORNEYS.

THE NORRIS PETERS CO., PHOTO-LITHO., WASHINGTON, D. C.

UNITED STATES PATENT OFFICE.

JEFFERSON J. NAGLEY, OF MARYSVILLE, WASHINGTON.

DOOR-GUARD.

SPECIFICATION forming part of Letters Patent No. 613,592, dated November 1, 1898.

Application filed February 5, 1898. Serial No. 669,256. (No model.)

To all whom it may concern:

Be it known that I, JEFFERSON J. NAGLEY, of Marysville, in the county of Snohomish and State of Washington, have invented a new and Improved Door-Guard, of which the following is a full, clear, and exact description.

The object of my invention is to provide a means whereby persons will be prevented from accidentally placing their fingers in the door-opening where the hinges are located either when the door is partially or wholly swung open; and a further object of the invention is to construct the device in a simple, durable, and economic manner and so that it will render effective service for a great length of time.

The invention consists in the novel construction and combination of the several parts, as will be hereinafter fully set forth, and pointed out in the claims.

Reference is to be had to the accompanying drawings, forming a part of this specification, in which similar characters of reference indicate corresponding parts in all the figures.

Figure 1 is a front view of a door having the improved guard applied thereto, a portion of the guard being broken away and the guard being shown as extending from the bottom portion of the door and its jamb to a point near the center only. Fig. 2 is a vertical section taken substantially on the line 2 2 of Fig. 1. Fig. 3 is a detail perspective view of one of the auxiliary hinges employed in connection with the guard for the purpose of stretching the same. Fig. 4 is a horizontal section through a portion of a door-jamb and a portion of the door, showing the guard in horizontal section and one of the expanding or auxiliary hinges in plan view, the door being represented as closed. Fig. 5 is a view similar to Fig. 4, showing the door in positive lines as partially open and in dotted lines as fully open; and Fig. 6 is a vertical section similar to Fig. 2, showing the guard as extending from top to bottom of the door.

A represents a door-frame of the usual construction, and B represents a door fitted to said frame, the door being connected with the swing-jamb by means of hinges 10 of any approved construction and in the usual manner. The guard may be attached to the outside or to the inside of the door, as may be desired. In the application of the said guard two or more auxiliary hinges C are employed, each of the hinges consisting of two plates 11 and 12, one being secured to the door-jamb and the other to the door, and each plate is provided with an arm which extends horizontally outward therefrom, the arm of the plate 11 being designated as 13 and the arm of the plate 12 as 14, and one arm is placed above the other. Each arm, at its outer extremity, is formed into a knuckle, and the knuckle portions of the arms of all the auxiliary hinges C used are connected by a rod 15, which is passed loosely through the knuckles and is provided with an enlargement or a head at each of its ends.

In addition to the auxiliary hinges C the guard consists of a strip 16 of a pliable or a flexible material, preferably a fabric of some description. This fabric is attached at one of its longitudinal edges to the door-jamb and at the other longitudinal edge to the door and is of sufficient length to extend beyond the uppermost and the lowermost of the auxiliary hinges C, and the width of the flexible or covering strip 16 is such that it will admit of the door being fully open or fully closed without the strip being placed under undue tension.

When the door is closed, the arms of the hinges, as shown in Fig. 4, are brought together, one over the other, and the cover-strip 16 is given a V shape in cross-section and is out of engagement with the arms of the auxiliary hinges.

When the door is partly opened, as shown in positive lines in Fig. 5, the arms of the auxiliary hinges are carried at angles to one another and the cover-strip 16 is drawn somewhat tightly over the knuckle portions of the arms of the auxiliary hinges, and when the door is fully opened the members of the auxiliary hinges are at a less angle to each other, as shown in dotted lines in Fig. 5, the cover-strip following the inclination of the projecting portions of the hinges.

It is evident that in the event a person should accidentally place his fingers against the cover-strip when the door is closed and force the said strip inward when the door is partially or fully opened the tension under which the tension-strip will be placed will force the fingers out from the space which will intervene between the door-jamb and the hinged section of the door, thus rendering it

impossible for even a child to bring its fingers in such relation to the door and door-jamb as to endanger them.

In Figs. 1 and 2 I have illustrated the guard as extending from the bottom portion of the door and door-jamb to a point near its center only, whereas in Fig. 6 I have shown the guard as extending from top to bottom of the door, and it will therefore be understood that the guard may be made of any length deemed desirable.

It is evident from the construction above described that the projecting arms of the auxiliary hinges will force the cover-strip 16 to assume the desired protective position at all times, whether the strip be new or whether it be worn by much service. Consequently the protective strip may be made of a very light material, and is preferably so made.

The covering-strip 16 for the hinge may be held in place by strips of metal or other suitable material arranged to secure the longitudinal edges of the strip to the door and door-jamb. The screws which hold the strip in place have their heads countersunk, so as to be flush with the surface of the strip.

Having thus described my invention, I claim as new and desire to secure by Letters Patent—

1. An improved door-guard, consisting of a flexible sheet adapted to be secured to the door and to its frame or jamb, crossing the opening at the place where the door is hinged, and auxiliary hinges attached to the door and jamb, members of the said hinges being carried at an angle to the door and jamb within the said flexible sheet, for the purpose specified.

2. A door-guard consisting of hinges adapted for attachment to a door and the door frame or jamb, each hinge consisting of body-plates, and pivoted arms horizontally projected from the said plates, one above the other, a rod connecting the arms of the hinges, and a cover sheet or strip adapted for attachment to the door frame or jamb and the door, the said sheet or cover-strip receiving within it the said hinges, for the purpose specified.

3. An improved door-guard, consisting of a flexible sheet secured to the door and its frame or jamb for the purpose of covering the opening at the place where the door is hinged, and hinges, each hinge consisting of two body-plates, one adapted for attachment to the door-jamb and the other to the door, each body-plate being provided with a horizontal pivoted arm, the arms of the plates being arranged one above the other, knuckles formed at the free ends of the arms of the hinges, and a rod passed through the said knuckles, connecting the hinges, the hinges and connecting-rod being within the space inclosed by the said flexible strip or sheet, for the purpose set forth.

JEFFERSON J. NAGLEY.

Witnesses:
ADELBERT FOLSOM,
A. G. PARCHKE.