B. L. CRAIG.

VEHICLE BODY.

APPLICATION FILED DEC. 20, 1911.

**1,055,713.** Patented Mar. 11, 1913.

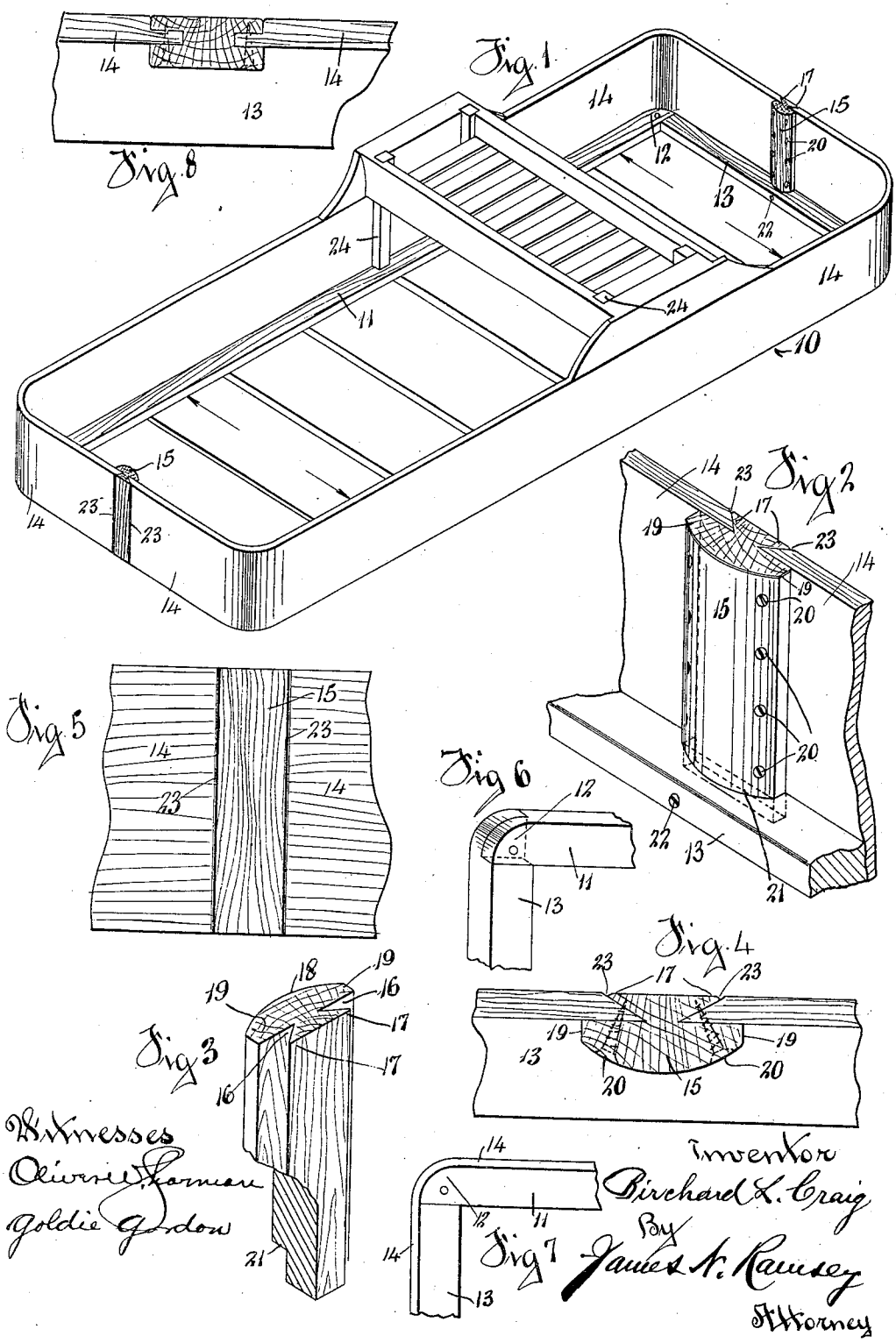


Witnesses
Oliver W. Thorman
Goldie Gordon

Inventor
Birchard L. Craig
By
James N. Ramsey
Attorney

COLUMBIA PLANOGRAPH CO., WASHINGTON, D. C.

# UNITED STATES PATENT OFFICE.

BIRCHARD L. CRAIG, OF CINCINNATI, OHIO.

## VEHICLE-BODY.

1,055,713. Specification of Letters Patent. Patented Mar. 11, 1913.

Application filed December 20, 1911. Serial No. 667,028.

*To all whom it may concern:*

Be it known that I, BIRCHARD L. CRAIG, a citizen of the United States, residing at Cincinnati, in the county of Hamilton and State of Ohio, have invented certain new and useful Improvements in Vehicle-Bodies, of which the following is a specification.

My invention relates to improved means for connecting and applying bent panels together and to the vehicle body.

The objects of my invention are to provide for the contraction and expansion of the sills to prevent splitting of the bent panels and cracking of the paint and varnish at the corners and where the panels are joined together; to obtain four rounded corners and a practically continuous flat or unbroken outer surface of the panels; to simplify and cheapen the construction and also to obtain a stronger structure than is otherwise obtainable in constructions having bent or rounded corner panels; and to secure the panels together upon the inside and at the same time form a brace strengthening the panels at their ends.

Contraction and expansion of wood takes place (by reason of atmospheric changes, such as variations in heat or moisture) crosswise of the grain.

My invention consists in mounting upon wood sills constructed in the usual manner with the grain extending lengthwise thereof and having rounded corners, bent wood panels joined together at their ends by upright wood pillars having the grain thereof extending transversely to the grain of the panels and separating the ends of the panels from each other sufficiently to allow for the contraction and expansion of the sills to which the panels are attached.

My invention also consists in the peculiar construction, combination and arrangement of the several parts as herein set forth and claimed.

In the accompanying drawing, which serves to illustrate the construction, application and use of my invention: Figure 1 is an isometric view of the vehicle body showing said device applied thereto; Fig. 2 is a detail view on an enlarged scale showing my preferred means of connecting the ends of the panels; Fig. 3 is an isometric view partly broken away of the pillar detached; Fig. 4 is a top view of the ends of the panels, pillar and sill; Fig. 5 is a side elevation of the ends of the panels and the pillar as connected together showing the position and trend of the grains of the wood; Fig. 6 is an isometric view showing the usual form of the ends of the sills and the means for connecting them together; Fig. 7 is a top view showing the bent panels engaging the sills at the corners; Fig. 8 is a top view showing a modified means of attaching and connecting the panels.

In the embodiment of my invention, as illustrated, and which shows a preferred construction, 10 represents the vehicle body comprising side sills 11 having curved or rounded ends 12 and connected in the usual manner by cross bars or end sills 13 having similarly formed ends, the ends of the sills being fastened together by screws and glue or otherwise, the grain of the wood of the sills running lengthwise thereof to obtain the necessary strength. Bent panels 14 having the grain necessarily running lengthwise thereof are secured at the bottom thereof to the outer ends of the side and end sills and to the seat posts 24, the curved corners of the panels snugly fitting upon the curved ends of the sills and having the joints between the panels and sills glued to add strength and to prevent water, moisture or dirt from getting between the panels and the sills, thus providing a perfectly tight water-proof and dirt-proof joint between the parts. These panels 14 are connected or joined together at their ends by pillars 15 interposed between and disposed transversely of the ends of said panels and with the grain of said pillars extending crosswise relatively to the grain of the panels and in the same relative position as the grain in the side sills 11, thus giving substantially the same contraction and expansion as the side sills, so that when the side sills 11 contract and expand crosswise, in the direction of the arrows, the pillars 15 contract and expand correspondingly allowing the panels 14 at the end to lengthen or shorten in the same relative proportion as the side sills 11 contract and expand, without providing any objectionable open space at the corners between the sills and the panels to admit water, moisture and dirt and allow it to deteriorate or decay the sills at the corners and destroy the strength of the structure, thus preserving the initial strength of the body to the full life of the vehicle.

If for any reason there should be any variation in the relative contraction and expansion of the sills and pillars the same is provided for by the grooves or depressions 23. The grooves 23 (Fig. 4) are formed upon the outer surface at the juncture of the panels 14 and pillars 15. Consequently if there should be any movement of the panels toward or away from the pillar the break or crack formed thereby would be in the bottom of the groove and would not spread or extend over any other surface either of the panels or the pillar but would be confined to the bottom of said groove where it would be hardly noticeable and, therefore, it would not materially affect or mar the beauty of the exterior surface.

I prefer to construct each of the pillars 15 of a strip having grooves 16 extending longitudinally upon its edges to form tapering or V-shaped projections 17 upon the outside and a raised support 18 on the inside having a shoulder or extension 19 extending over the side of each panel 14 adjacent the end of said panel a sufficient distance to properly brace and hold in position the ends of said panels and to provide means whereby said panels may be suitably attached or secured thereto. I prefer to form the inside of the pillars oval-shaped to give the same a neat and finished appearance and permit the fastening screws 20 to pass through the panel at an angle slanting toward its connecting end and into the projection 17 of the pillar 15. The lower end of the support 18 is cut away to form a shoulder 21 fitting snugly against the top of the end sill 13 and is held in place by a screw 22 inserted from the inside of the end sill 13.

At the point of contact with each projection 17 of the pillars 15 with the panels 14 I prefer to form a groove or depression 23 the full length of the point of contact to conceal and confine any possible checks or breaks in the surface of the panel when subjected to unusual conditions by reason of rough usage to the vehicle when no contraction or expansion is involved.

I prefer to make the side panels 14 of two continuous pieces joined together at the center of each end of the vehicle body by the pillars 15 as above described, thus providing a continuous unbroken surface from the center of the front end to the center of the rear end of the vehicle body, or they may be joined at other points. If desired the panels 14 may be formed of a larger number of pieces connected together by the pillars 15.

The contraction and expansion of both the side sills 11 and end sills 13 is provided for by means of the pillar 15 which is adapted to contract and expand in proportion to the amount of contraction and expansion of said sills. However, the end sills being very short the amount of contraction and expansion of same would be comparatively slight and any excess of expansion would be provided for by means of the joints and any break would be concealed by means of the grooves 23.

It will be apparent that my invention is capable of some modification without departure from its scope or spirit, as for instance, the pillars may be constructed in the manner shown in Fig. 8 which involves a mere change in the shape of the connecting parts.

An important advantage of my construction consists in the extremely simple, convenient and economical method of assembling the parts, all that is required being merely to bend the two panels to the required shape and insert the pillars between the ends of said panels and then securing same as before described.

Another important advantage of my invention is that it provides means whereby the contraction and expansion of the sills relatively to the panels throughout the entire length of the vehicle body is provided for.

What I claim as new and desire to secure by Letters Patent is:

1. In a vehicle body, wood sills secured together and having the grain extending lengthwise thereof and having rounded corners, bent wood panels suitably secured to said sills, pillars interposed between the ends of said panels and having their grain extending at an angle relatively to the grain of the panels and in substantially the same relative position as the grain in the sills whereby the sills are permitted to contract and expand laterally without substantially changing their relative relationship to the panels, substantially as set forth and for the purposes specified.

2. In a vehicle body, wood sills secured together and having rounded corners and having the grain extending lengthwise thereof, bent wood panels suitably secured to said sills and having their ends tapered, pillars interposed between the ends of said panels and having the grain extending at an angle relatively to the grain of the panels in substantially the same relative position as the grain in the sills whereby the sills are permitted to contract and expand laterally without substantially changing their relative relationship to the panels, said pillars having longitudinal grooves in their edges adapted to receive said tapering ends of the panels, substantially as set forth and for the purposes specified.

3. In a vehicle body, wood sills secured together and having rounded corners and having the grain extending lengthwise thereof, bent wood panels suitably secured

to said sills, pillars interposed between the ends of said panels and having longitudinal grooves in their edges adapted to engage the ends of the bent wood panels, substantially as set forth and for the purposes specified.

4. In a vehicle body, wood sills secured together and having rounded corners and having the grain extending lengthwise thereof, bent wood panels suitably secured to said sills, pillars interposed between the ends of said panels and having longitudinal grooves in their edges to receive the ends of said panels and grooves in the outer surface at the points of contact of said pillar and said panels, respectively, substantially as set forth and for the purposes specified.

BIRCHARD L. CRAIG.

Witnesses:
JAMES N. RAMSEY,
GOLDIE GORDON.

Copies of this patent may be obtained for five cents each, by addressing the "Commissioner of Patents, Washington, D. C."