(12) INTERNATIONAL APPLICATION PUBLISHED UNDER THE PATENT COOPERATION TREATY (PCT)

(19) World Intellectual Property Organization
International Bureau

(43) International Publication Date
11 April 2019 (11.04.2019)

WIPO | PCT

(10) International Publication Number
WO 2019/068486 A1

(51) International Patent Classification:
B65D 8/00 (2006.01) *B65D 3/12* (2006.01)

(21) International Application Number:
PCT/EP2018/075632

(22) International Filing Date:
21 September 2018 (21.09.2018)

(25) Filing Language: English

(26) Publication Language: English

(30) Priority Data:
1751229-4 04 October 2017 (04.10.2017) SE

(71) Applicant: **TETRA LAVAL HOLDINGS & FINANCE S.A.** [CH/CH]; 70, Avenue Général-Guisan, CH-1009 PULLY (CH).

(72) Inventors: **RÅBE, Magnus**; Albovägen 12, 23254 Åkarp (SE). **HÅKANSSON, Bengt**; Bjärrödsbyaväg 209-23 Lerboda, 275 95 SJÖBO (SE). **JONASSON, Katarina**; Svalvägen 41, 237 36 BJÄRRED (SE). **JACOBSSON, Ingemar**; Allegatan 32, 24731 Södra Sandby (SE). **ANDERSSON, Pär**; Slåttervägen 4C, 227 38 LUND (SE). **OLANDER, Jonny**; Jasminvägen 8, 23138 Trelleborg (SE). **SELLBERG, Hans**; Älgskyttevägen 7, 22653 Lund (SE).

(74) Agent: **TETRA PAK - PATENT ATTORNEYS SE**; AB Tetra Pak, Patent Department Ruben Rausings gata, 22186 LUND (SE).

(81) Designated States *(unless otherwise indicated, for every kind of national protection available)*: AE, AG, AL, AM, AO, AT, AU, AZ, BA, BB, BG, BH, BN, BR, BW, BY, BZ, CA, CH, CL, CN, CO, CR, CU, CZ, DE, DJ, DK, DM, DO, DZ, EC, EE, EG, ES, FI, GB, GD, GE, GH, GM, GT, HN, HR, HU, ID, IL, IN, IR, IS, JO, JP, KE, KG, KH, KN, KP, KR, KW, KZ, LA, LC, LK, LR, LS, LU, LY, MA, MD, ME, MG, MK, MN, MW, MX, MY, MZ, NA, NG, NI, NO, NZ, OM, PA, PE, PG, PH, PL, PT, QA, RO, RS, RU, RW, SA, SC, SD, SE, SG, SK, SL, SM, ST, SV, SY, TH, TJ, TM, TN, TR, TT, TZ, UA, UG, US, UZ, VC, VN, ZA, ZM, ZW.

(84) Designated States *(unless otherwise indicated, for every kind of regional protection available)*: ARIPO (BW, GH, GM, KE, LR, LS, MW, MZ, NA, RW, SD, SL, ST, SZ, TZ, UG, ZM, ZW), Eurasian (AM, AZ, BY, KG, KZ, RU, TJ, TM), European (AL, AT, BE, BG, CH, CY, CZ, DE, DK, EE, ES, FI, FR, GB, GR, HR, HU, IE, IS, IT, LT, LU, LV, MC, MK, MT, NL, NO, PL, PT, RO, RS, SE, SI, SK, SM, TR), OAPI (BF, BJ, CF, CG, CI, CM, GA, GN, GQ, GW, KM, ML, MR, NE, SN, TD, TG).

Published:
— *with international search report (Art. 21(3))*
— *before the expiration of the time limit for amending the claims and to be republished in the event of receipt of amendments (Rule 48.2(h))*

(54) Title: PACKAGING CONTAINER

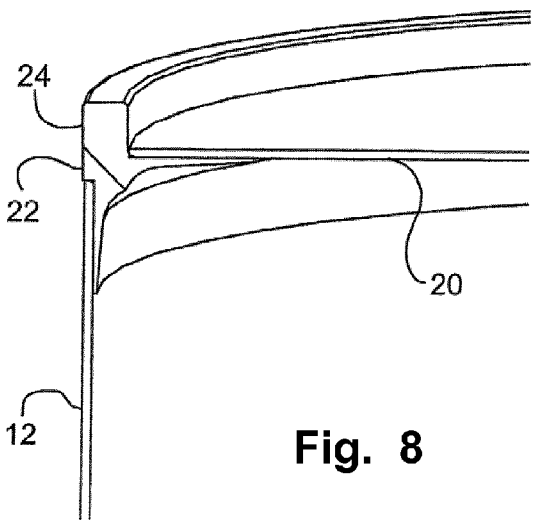

Fig. 8

(57) Abstract: A packaging container, in particular for liquid foodstuffs such as drinks, comprising a sleeve (12) with a first and a second end part, wherein at the first end part, the sleeve is closed by a first disc (20), wherein said first disc is fixedly attached to the sleeve by means of a first and a second ring (22, 24), wherein at least a part of the outer casing surface of the first ring is sealed to an inner casing surface of the sleeve, wherein said first disc is sealed to the second ring, wherein the second ring is fixed to the first ring, and wherein at said second end part, the sleeve has a first inner circumference and is closed by means of a second disc which has a circumference which is larger than said first inner circumference of the sleeve, so that a rim extending around the disc forms a sleeve part when the disc is arranged to close said second end part, wherein said sleeve part extends part of the way along the inner casing surface of the sleeve, and wherein a seal is formed between at least a part of the outer casing surface of the sleeve part and the inner casing surface of the sleeve.

WO 2019/068486 A1

PACKAGING CONTAINER

Technical Field

The present invention concerns a packaging container for pressurised, for example carbonated, drinks.

BACKGROUND

Carbonated drinks, such as for example beer, sparkling wine and soft drinks, contain gas, for example CO_2, which creates a pressure in the packaging container used. This imposes requirements for strength and sealing in packaging containers, so that firstly they can resist said pressure without rupturing, for example at the seals, and secondly they can retain the gas in the container for a specific period so that the drink can be stored. Carbonated drinks are today usually packed in metal cans, for example aluminium cans, or bottles made of glass or plastic such as polyester (PET). One problem with glass and plastic bottles is that they are difficult to provide with external graphic printing, for example showing trademarks etc., and it is often necessary to provide the bottles with labels, for example of paper, on which the graphic printing is applied. To apply these labels, an extra step is required in the production process. Similarly, metal cans are difficult to provide with graphic printing. It is possible to apply printing using certain screen-printing techniques, but these are often limited to relatively simple designs with a few colours. Another problem with glass bottles in particular is that they are relatively fragile and heavy, which has significance amongst other things for transport and handling both by the carriers and by the end consumer. A broken glass bottle also constitutes a risk that the consumer can easily become injured. Furthermore, in many cases glass bottles are regarded as a security risk at large events, such as for example football matches, since they constitute a potential weapon either in the form of an intact, unopened bottle or in the form of part of a broken bottle, e.g. a bottle neck. For this reason, usually glass bottles are not allowed at large events. Metal cans may also constitute a security and safety risk. A further problem with metal cans is their heat-conducting capacity. A can taken directly from a refrigerator for example is very cold for the consumer to hold, as the cold in the contents is transferred very easily through the can. This may also be perceived as a problem in the other direction, i.e. a drink which the consumer wishes to keep cold can heat up relatively quickly, simply by the consumer holding the can in their hand. Another problem with

modern metal cans is that, in many cases, the form is imposed by production, where production methods limit the sizes and shapes which can be produced. There is therefore little room for creating cans which are e.g. specific to trademarks, products or companies. A further problem with metal cans is that they have a risk of corrosion on long-term exposure to corrosive environments.

SUMMARY

The aim of the present invention was to produce a packaging container which can resist an internal pressure from e.g. carbonated drinks, and which at the same time is constructed in such a way as to allow the use of other packaging materials, such as paper or cardboard, which easily solve the problems described above. A packaging container which is at least partly produced from paper or cardboard is simple to provide with even very complex graphic prints in many colours. Moreover, a packaging container is obtained which weighs very little and with which the end consumer has less risk of injury. This also means that the packaging container does not constitute the same security risk as a glass bottle and is ideal for use at large events. Another advantage with a packaging container which allows the use of paper or cardboard is its insulating effect. The packaging container does not become too cold to hold, even when it contains a chilled drink. The insulating effect also works in the opposite direction, i.e. body heat from the consumer's hand heats the contents of the packaging container more slowly than is the case with glass bottles and metal cans. Furthermore, a packaging container of paper or cardboard tolerates a corrosive environment. Also, a packaging container of paper or cardboard is made from material on a roll, directly at the plant where it will later be filled. Therefore no intermediate storage or transport of the packaging containers is required.

This object is achieved by a packaging container, in particular for liquid foodstuffs such as drinks, comprising a sleeve with a first and a second end part, wherein at the first end part the sleeve is closed by a first disc, wherein said first disc is fixedly attached to the sleeve by means of a first and a second ring, wherein at least one part of the outer casing surface at the first ring is sealed to an inner casing surface of the sleeve, wherein said first disc is sealed to the second ring, wherein the second ring is fixed to the first ring, and wherein at said second end part, the sleeve has a first inner circumference and is closed by means of a second disc which has a circumference which is larger than said first inner circumference of the sleeve, so that a rim extending around the disc forms a sleeve part when the disc is arranged to close said second end part, wherein said sleeve part extends part of the way along the inner casing surface of

the sleeve, and wherein a seal is formed between at least a part of the outer casing surface of the sleeve part and the inner casing surface of the sleeve.

A structure as described above allows use of materials other than metal, glass or plastic for both the sleeve and for the first and the second disc. Also, the design allows the constituent parts to be formed so as to minimise stress concentrations, which means that the packaging container can resist an internal pressure corresponding to the pressure created by the carbonated filling product.

The invention also concerns a packaging container, in particular for liquid foodstuffs such as drinks, comprising a sleeve with a first and a second end part, wherein at the first end part the sleeve is closed by a first disc, wherein said first disc is fixedly attached to the sleeve by means of a first and a second ring, wherein at least one part of the outer casing surface of the first ring is sealed to an inner casing surface of the sleeve, wherein said first disc is fixed to the second ring, wherein the second ring is sealed to the first ring.

A closure as described above allows the use of materials other than metal, glass or plastic for both the sleeve and the disc, and the design allows both the rings to be formed so as to minimise stress concentrations in the region between the disc and sleeve, and also to give a fluid-tight and gas-tight seal. The two rings may also allow rapid closure of the packaging container after filling.

In one example of the first end part, the sleeve has a longitudinal direction, the first ring has an extension in an axial direction which substantially coincides with the longitudinal direction of the sleeve, and the ring has a material thickness tapering in a direction away from said first end part. A ring with progressively tapering stiffness achieves the advantage that the ring can follow any bulging of the sleeve due to the pressure from the filling product. This counters a high load on the seal between the ring and the sleeve. Also, the load on the second ring, which bulges more easily than the sleeve, can be successively transferred to the sleeve. Furthermore, the design of the ring counters the occurrence of stress concentrations in the seal between the first and the second rings. Another advantage of the design described is that the material consumption can be kept low.

In one example, the second ring has a material thickness tapering towards the disc centre. The reason behind this design is similar to that above: a ring with successively diminishing stiffness achieves the advantage that the ring can follow any bulging of the disc which occurs due to pressure of the filling product. This counters a high load on the seal between the ring and the disc. The force from the disc can also be transferred successively to the sleeve, which reduces the stress concentrations in

the seal between the first and the second ring. Another advantage of the design described is that, just as described above, the material consumption can be kept low.

In a further example, the sleeve has a first inner circumference at said first end part, wherein the disc is arranged to have a circumference which is the same as or smaller than said first inner circumference of the sleeve, and wherein the second ring has a surface facing away from the interior of the packaging container against which the disc is sealed, and an edge which extends around the periphery of the disc. With this design, the disc has a very simple form and the disc can be sealed to the ring before the two rings are sealed to each other. This allows rapid closure of the packaging container after filling. Furthermore, the design has the advantage that the outer edge of the disc can be protected slightly by the rim. The rim in turn forms a "window", by means of which a simple seal of the two rings is possible. This will be described in more detail below.

Furthermore, the first end part is characterised in that the first and second rings are fixed to each other. Fixing may take place at opposing sealing surfaces of the rings or at a sealing surface which is spaced from the rings. The sealing surfaces may be inclined so that they form an angle α against the longitudinal direction of the sleeve. The inclined surfaces may be advantageous since they offer relatively large sealing areas, and it is possible to form the rings so that stress concentrations can be reduced.

In one example, said angle α lies in the range of 20 - 70 degrees, and particularly advantageous properties may be achieved if the angle is around 45 degrees. It may be desirable to select as small a difference between the angles as possible since this gives a better symmetry in the rings, which may allow the rings to be more even in strength, and achieve greater stability. The stability may be important in some situations for achieving a sufficiently high and even sealing pressure over the entire sealing surfaces.

In one example, the first ring is substantially opaque to laser light, wherein the second ring is substantially transparent to laser light, and wherein the two rings are sealed by means of laser light which is transmitted through the second ring onto at least part of the interface between the first and second rings. The advantage of sealing with laser light is that no counterhold is required on the inside of the packaging container, and this type of sealing is therefore ideal for final sealing of a packaging container of the type described. A sealing technique which requires a counterhold may be more problematical to perform on final sealing.

Furthermore, sealing by means of laser light is simple, excellent from a strength aspect, and it is easy to form the rings so that they are suitable for this type of sealing.

In a further example, the first and/or the second ring is/are made of a heat-

sealable material, preferably a thermoplastic. This allows a simple, fluid-tight and gas-tight seal of the rings both to each other and to the surrounding surfaces. The thermoplastic may comprise material selected from the group containing polyolefins, polyesters, polyamides, polycarbonates, polyacetates, ionomers, and ethylacryl copolymers. In one example, the thermoplastic contains polyester. Polyester is an easily available and cheap plastic with sufficient strength.

In one example, the sleeve and/or the disc is/are made from a laminate containing at least one core layer of paper or cardboard, at least one layer comprising a heat-seal-promoting material, and an outer layer of heat-sealable material, such as for example a thermoplastic. In the introduction, the advantages of using a laminate containing paper or cardboard to form a packaging container for, amongst other things, carbonated drinks were listed.

The invention also concerns a packaging container, in particular for liquid foodstuffs such as drinks, comprising a sleeve with a first and a second end part, wherein at said second end part, the sleeve has a first inner circumference and is closed by means of a disc which has a circumference which is larger than said first inner circumference of the sleeve, so that a rim extending around the disc forms a sleeve part when the disc is arranged to close said end part, wherein said sleeve part extends part of the way along the inner casing surface of the sleeve, and wherein a seal is formed between at least a part of the outer casing surface of the sleeve part and the inner casing surface of the sleeve. The design of the closure of the end part is advantageous with regard to load. Placing the sleeve part longitudinally with the inside of the sleeve inside the packaging container allows the pressure forces from e.g. carbonated filling products to press the seals together rather than push them apart, and the radii formed in the "corner" between the sleeve end part and the disc reduce the occurrence of stress concentrations. Furthermore, the disc can be formed with simple tools.

In one example, the edge of the sleeve part is covered by a strip or ring, wherein at least part of an outer casing surface on the first part of the strip or ring is sealed to the inner casing surface of the sleeve, and at least part of an outer casing surface of a second part of the strip or ring is sealed to an inner casing surface of the sleeve part of the disc. In this way, the sleeve edge can be protected, which allows use for example of materials containing one or more fibre layers, such as layers of paper or cardboard. The strip or ring may comprise a polymer material.

In an example, the disc is provided with a number of fold lines to facilitate forming of a folded sleeve part, wherein the fold lines run from the periphery of the disc partly into the centre of the disc along geometric lines which substantially intersect the centre

of the disc. This may reduce the risk of uncontrolled large folds which could cause a problem on sealing in that they form channels.

In a further example, the ring or strip is made from a heat-sealable material, such as e.g. a thermoplastic. A heat-sealable material in the form of a thermoplastic has the advantage that, when heated to a temperature close to the melting point, it can be brought to melt inside the fold on the sleeve part so as to form a fluid-tight and gas-tight seal. The thermoplastic may comprise a material selected from the group containing polyolefins, polyesters, polyamides, polycarbonates, polyacetates, ionomers and ethylacryl copolymers. In one example, the thermoplastic comprises polyester. As stated earlier, polyester is an easily available and cheap plastic.

In one example, the sleeve and/or the disc is/are made from a laminate containing at least one core layer of paper or cardboard, at least one layer comprising a heat-seal-promoting material, and outer layers of heat-sealable material, preferably a thermoplastic. The advantages of using a laminate comprising paper or cardboard when forming a packaging container for, amongst other things, carbonated drinks, have already been listed.

The invention also concerns a method (indicated diagrammatically in Fig. 15a-b) for sealing by means of a disc a first end part of a sleeve to form a packaging container, in particular for liquid foodstuffs such as drinks, wherein the method comprises the steps of sealing at least part of an outer casing surface of a first ring to an inner casing surface of the sleeve, sealing said disc to a second ring, and fixing the first and second rings to each other. In this way, a closure is achieved which comprises few working steps and allows rapid and simple final sealing after filling.

In one example, the method comprises the step of filling the packaging container with filling product before or very shortly after the step of fixing the first and second rings to each other. In this way, the filling product may be exposed to the environment only for short time period, which may be a great advantage if the filling product contains for example carbonic acid, i.e. carbon dioxide dissolved in water, which is easily emitted by the filling product in the form of carbon dioxide.

The invention also concerns a method (indicated diagrammatically in Fig. 16a-b) for sealing by means of a disc a second end part of a sleeve, which second end part has a first inner circumference, to form a packaging container, in particular for liquid foodstuffs such as drinks, wherein the method comprises the steps of producing said disc with a circumference which is larger than said first inner circumference of the sleeve, forming the disc so that a rim extending around the disc at least forms a sleeve part, arranging the disc in the sleeve so that said sleeve part is arranged to extend part of the way along the sleeve longitudinal direction, and sealing at least part of the outer

casing surface of the sleeve part to the inner casing surface of the sleeve. In this way, a closure can be achieved in which the working steps are few and relatively uncomplicated.

In one example, the method comprises the steps of covering the edge of the sleeve part with a strip or ring, sealing at least part of an outer casing surface of a first part of the strip or ring to the inner casing surface of the sleeve, and sealing at least part of an outer casing surface of a second part of the strip or ring to an inner casing surface of the sleeve part of the disc. The strip or ring in one example is made from a polymer material.

The invention also concerns a method (indicated diagrammatically in Fig. 17a-b) for sealing by means of a first disc a first end part of a sleeve, and by means of a second disc sealing a second end part of a sleeve to form a packaging container, in particular for liquid foodstuffs such as drinks, wherein the method comprises the step of first closing the second end part, which process comprises the steps of producing said second disc with a circumference which is larger than a first inner circumference of the second end part of the sleeve, forming the disc so that a rim extending around the disc at least forms a folded sleeve part, arranging the disc in the sleeve so that said sleeve part is arranged to extend part of the way along the sleeve longitudinal direction in the direction towards the interior of the packaging container, and sealing at least part of the outer casing surface of sleeve part to the inner casing surface of the sleeve, and beginning the closure of the first end part by sealing at least part of an outer casing surface of a first ring to the inner casing surface of the sleeve, filling the packaging container with filling product, and after filling completing the started closure of the first end part by the step of fixing the first ring to a second ring where the first disc is sealed to the second ring. In this way, a packaging container can easily be produced and filled. The working steps are relatively few and uncomplicated.

In one example, the process of closing the second end part furthermore comprises the steps of covering the edge of the sleeve part with a strip or ring, sealing at least part of an outer casing surface of a first part of the strip or ring to the inner casing surface of the sleeve, and sealing at least part of an outer casing surface of a second part of the strip or ring to an inner casing surface of the sleeve part of the disc.

In one example, closure of the second end part takes place by first forming the sleeve part of the disc, sealing at least a part of an outer casing surface of a second part of the strip or ring to an inner casing surface of the sleeve part of the disc, arranging the disc with the ring in the sleeve, and then making other seals which comprise sealing at least part of the outer casing surface of the sleeve part to the inner

casing surface of the sleeve, and sealing at least part of an outer casing surface of a first part of the strip or ring to the inner casing surface of the sleeve.

In one example, a sealing between the first and the second ring takes place by means of laser light.

BRIEF DESCRIPTION OF THE DRAWINGS

Examples are described below in detail with reference to the attached drawings in which:

Fig. 1 shows diagrammatically a perspective view of a cross-section through an assembled packaging container according to one example,

Fig. 2 shows diagrammatically a top view of the bottom disc provided with fold lines according to one example,

Fig. 3 shows diagrammatically a perspective view of a ring for use when closing the bottom end of the packaging container,

Fig. 4 shows diagrammatically part of a cross-section through the bottom end,

Fig. 5 shows diagrammatically a plan view of a section through the bottom end,

Fig. 6 shows diagrammatically a perspective view of a first ring for use when closing the top end of the packaging container,

Fig. 7 shows diagrammatically a perspective view of a second ring,

Fig. 8 shows diagrammatically part of a cross-section through the top end,

Fig. 9a-c show diagrammatically plan views of sections through the top end,

Fig. 10 shows diagrammatically an enlargement of a section through the seal of the bottom end of packaging container,

Fig. 11 shows diagrammatically a view corresponding to figure 4 according to another example,

Fig. 12 shows diagrammatically a view corresponding to figure 5 according to another example,

Fig. 13 shows diagrammatically a plan view of a section through the top end,

Fig. 14a-b show diagrammatically plan views of sections through the top end,

Fig. 15a-b show diagrammatically flow diagrams of an exemplary method,

Fig. 16a-b show diagrammatically flow diagrams of an exemplary method,

Fig. 17a-b show diagrammatically flow diagrams of an exemplary method.

DETAILED DESCRIPTION

Figure 1 shows a packaging container which as a whole is designated with reference sign 10. The packaging container 10 comprises a sleeve 12 with a first and a second end part 12a, 12b. In the example, the sleeve 12 has a substantially circular cross-section, and the first end part 12a constitutes part of the top of the packaging container, while the second end part 12b later constitutes part of the bottom of the packaging container. Other cross-sections of the sleeve 12 are also conceivable. The sleeve 12 may be produced from a laminate containing a core layer, a layer with heat-seal-promoting material and heat-sealing layers. The heat-sealing layers are the outer layers, and therefore the core layer and the layer with the heat-seal-promoting material are located between the heat-sealing layers. The core layer may be made of paper or cardboard and the heat-sealing layers may be made of a thermoplastic such as for example a polyester (PET). The layer with heat-seal-promoting material is related to the sealing technique used and may be a layer which, by means of external energy supply, can be activated to produce heat for heating the adjacent layers, for example the heat-sealing layers, so that these can be fused to other similar layers. In one example, this is a metal layer such as aluminium film which also functions as a barrier against acid and gas in order to protect the filling product and extend its shelf life. The aluminium film requires the use of induction sealing techniques. Sealing by induction is known to the person skilled in the art and the technique will not be described in more detail. The term "sealing" means that the material is welded together in the outer layer.

The sleeve 12 may be produced from a packaging material substance, e.g. a blank, which in a conventional manner is formed into a tube in that one longitudinal edge is joined to and overlaps the other longitudinal edge. The tube is formed such that the aluminium layer is situated nearer to the centre of the packaging container than the paper layer. Forming a packaging material into a tube with an overlapping joint is known to the person skilled in the art and will not be described further.

Examples will be described below of how the sleeve end parts 12a, 12b may be closed to form a packaging container 10. Firstly, the second end part 12b will be described, i.e. the end part which in this case forms part of the bottom of the packaging container 10. Said end part 12b is closed by a disc 14 which is sealed to the sleeve 12. The disc 14 shown in figure 2 will be designated below the bottom disc. The bottom disc 14 has a diameter which is larger than a first inner diameter of the sleeve. The diameter of the disc is preferably so much larger than the sleeve inner diameter that a rim extending around the disc forms a sleeve part 14a, see figure 5, which extends part of the way along the sleeve inner casing surface (in the axial or longitudinal directions

of the sleeve) and can come to bear against the inner casing surface of the sleeve, although the remaining part of the bottom disc 14 is oriented so as to cover the opening in the sleeve 12. The sleeve part 14a may thus assume a dished or U-shape. The sleeve part 14a may be formed by bending and folding the rim of the disc. To help achieve an even distribution of the folds formed, a plurality of fold lines 16, or reliefs, are embossed into the bottom disc 14, see figure 2. The fold lines 16 can be created on the side of the bottom disc which will be on the outside of the packaging container, since this generates less stress on the aluminium film and may allow better forming of the bottom disc 14. It is also possible to make the fold lines on the inside. The fold lines 16 may be produced with a conventional embossing tool and may run from the periphery of the disc, part of the way into the centre of the disc 14, along geometric lines which substantially intersect the centre. In the example shown in figure 2, the fold lines 16 are evenly distributed around the disc 14 but they may also have an uneven distribution, e.g. in the case where the cross-section is not circular but instead oval or other shapes. The length of the fold lines 16 may be the same for all lines or alternatively they may be of different length, e.g. every other line may be half as long. In the other figures, for the sake of simplicity, the fold lines are not shown. The sleeve part 14a may extend part of the way along the inner casing surface of the sleeve in the direction towards the interior of the packaging container (the axial or longitudinal direction of the sleeve, in the direction away from the disc 14). The pressure exerted by the contents of the packaging container can then press against the sleeve part 14a to promote the seal.

The bottom disc 14 may be made of a laminate which contains a core layer, a layer with heat-seal-promoting material and two heat-sealing layers. The laminate may be of the same type as that from which the sleeve 12 is made. For ease of sealing the bottom disc 14 and sleeve 12 together, as will be described below, the heat-sealing layer may be made of the same material in both the sleeve 12 and the bottom disc 14. The layer with the heat-seal-promoting material may be made of aluminium film. The heat-sealing layer is the outer layer and may be placed on each side of the bottom disc 14. Then the core layer and the heat-seal-promoting layer are situated between the sealing layers. The sleeve part 14a may be formed in such a way that the laminate is oriented with the layer with the heat-seal-promoting material located inwardly towards the interior of the packaging container, and the core layer therefore situated outwardly. The bottom disc 14 may be made by punching from a large piece of packaging laminate. A ring 18 may be sealed in the region of the edge of the sleeve part, as shown in figures 4 and 5. The ring 18 may be made of a heat-sealable material, e.g. a thermoplastic. The thermoplastic may contain material selected from the group

comprising polyolefins, polyesters, polyamides, polycarbonates, polyacetates, ionomers and ethylacryl copolymers. In this example, the thermoplastic is polyester. The ring 18 contains a first and a second part 18a, 18b which extend in an axial direction which substantially coincides with the longitudinal direction of the sleeve part and the sleeve. The outer diameter of the first part 18a may be larger than the outer diameter of the second part 18b of the ring. The difference corresponds substantially to the thickness of the bottom disc, i.e. the laminate thickness. An intermediate third part 18c connects the first and second parts 18a, 18b of the ring. The second part 18b has an outer diameter which is substantially the same as the inner diameter of the sleeve part 14a of the disc. The outer casing surface of the second part 18b is sealed to the inner casing surface of the sleeve part 14a. In this example, the seal is made such that the first and third parts 18a, 18c extend outside the sleeve part 14a in the direction inwardly towards the packaging container 10. The first part 18a has an outer diameter which is substantially the same as the inner diameter of the sleeve 12, and the outer casing surface of the first part 18a is sealed to the inner casing surface of the sleeve 12. The third part 18c of the ring 18 is therefore arranged to be situated over the edge of the sleeve part and to cover this. Furthermore, the bottom disc 14 is sealed to the sleeve 12 in that the outer casing surface of the sleeve part 14a of the disc is sealed to the inner casing surface of the sleeve 12. The seals may be produced by means of induction sealing, which is carried out using inductors which may have a substantially circular cross-section. The seals may be produced individually and the inductor may be placed on the outside of the seals, i.e. when sealing between the bottom disc 14 and the ring 18, the inductor may be placed outside the disc 14, and when sealing between the inner casing surface of the sleeve and the outer casing surface of the ring, the inductor may be placed outside the sleeve 12. On sealing between the inner casing surface of the sleeve and the outer casing surface of the bottom disc, the inductor may be placed outside the sleeve 12. An expandable rubber ring may be used as a sealing counterhold.

The bottom disc 14 may be fixedly sealed in the sleeve 12 and extend into the sleeve 12 from the second end of the sleeve, i.e. the bottom end, so that the packaging container 10 when standing on a substrate rests on the edge of the sleeve instead of on the surface of the disc. When the packaging container 10 is filled for example with a carbonated drink, a pressure builds up in the container which may cause the bottom disc 14 to bulge slightly. The edge can therefore give a more stable packaging container 10 for placing on various substrates. To further reinforce the sleeve edge, this may be rolled one or more times in the direction towards the bottom disc 14, see figures 4 to 5. The rolled edge may be pressed so that it cannot unroll on its own.

The first end part 12a will be described below, i.e. the part which in this case forms part of the top of the packaging container 10. Like the second end part 12b, the first end part 12a is closed by a disc 20 fixedly attached to the sleeve 12. This disc 20 will be designated below as the top disc. The top disc 20 may comprise an opening arrangement (not shown) which allows the consumer to open the packaging easily. This opening arrangement, which can be brought to penetrate the top disc in some way, may be formed in various ways and will not be described here. In one example, the top disc 20 is made from a laminate of the type described in connection with the sleeve 12 and the bottom disc 14. The top disc 20 may have a circumference which is smaller than the inner circumference of the sleeve and can be placed in the sleeve 12 so that the laminate is oriented so that the layer with the heat-seal-promoting material is situated on the inside, towards the interior of the packaging container. The core layer is therefore located on the outside in this example.

Furthermore, the top disc 20 is fixedly attached to the sleeve 12 by means of a first and a second ring 22, 24 which will now be described. The first ring 22 may have a diameter which is substantially the same as or slightly smaller than the inner diameter of the sleeve, and may also have a longer extension in the axial direction than in the radial direction, i.e. have approximately the form of a sleeve. The first ring 22 will also be designated as the sleeve ring below. The outer casing surface of the sleeve ring 22 may substantially comprise a first end 22a in the form of a preferably flat part, and a second end in the form of a shoulder part 22b directed radially outward therefrom, as shown for example in figures 8, 9 and 14. The flat parts 22a may run along the sleeve 12, i.e. have an extension which substantially coincides with the longitudinal direction of the sleeve, and may be sealed to the inner casing surface of the sleeve in the region of the sleeve edge so that the shoulder part 22b, which has an extension in the radial direction which may substantially be the same as the material thickness of the sleeve, covers the cut edge of the sleeve, as shown for example in figure 9a. The sleeve ring 22 may have a material thickness which diminishes in the axial direction and may taper in the direction from the shoulder part 22b towards the flat part 22a, which is also in the axial direction away from the first end part 12a, as shown for example in figure 9a. At the free end on the flat part 22a, the material thickness of the sleeve ring may be very small. If the sleeve 12 bulges because of pressure in the packaging container 10, the sleeve ring 22 can thus bulge with it. The inner casing surface of the sleeve ring may therefore be conical or formed along one or more radii, or be formed by a combination thereof. In the vicinity of the shoulder part 22b, the ring 22 may have a region with a relatively large material thickness, and the region may comprise a sealing surface 22c which may be inclined so that it forms an angle α against the longitudinal direction of

the sleeve. The surface 22c may be substantially flat, as shown for example in figures 8 and 9a, and the angle α may lie in the range from 20 to 70 degrees. In the example shown, the angle α is around 45 degrees. The surface 22c may also take other forms which are described below with reference to figures 9b-c, 13 and 14.

The second ring 24 may have a longer extension in the radial direction than in the axial direction, i.e. have approximately the shape of a washer. This will be designated below as the washer 24 . The outer diameter may be substantially the same as the outer diameter of the sleeve. The washer 24 may be placed on top of the sleeve ring 22 and is provided with a sealing surface 24a corresponding to the sealing surface 22c of the sleeve ring 22. This sealing surface 24a may be arranged on the side of the washer 24 which faces the interior of the packaging container. The surface 24a may be inclined by angle α and be substantially flat, as shown for example in figures 8 and 9a. The surface 24a may also comprise other forms which are described below with reference to figures 9b-c, 13 and 14. The angle α may be selected for advantages from a stability aspect since it allows the rings to be substantially evenly strong. It is therefore easier to achieve an even and high sealing pressure on sealing between the surfaces 22c, 24a. The second ring 24 may be fixed to the first ring 22 with different configurations of the rings 22, 24 and surfaces 22c, 24c, as illustrated for example in figures 8, 9, 13 and 14.

The washer 24 may be provided with a flat surface 24b against which the top disc 20 is sealed. Said flat surface 24b may be arranged on the side of the washer 24 which faces outward from the packaging container 10. The top disc 20 may be sealed to the washer 24 by e.g. induction sealing. The surface 24b may be surrounded by an edge 24c protruding in the axial direction and arranged to run around the periphery of the disc, as shown for example in figure 9a. The inner diameter of the edge 24c may therefore be approximately the same size as or slightly larger than the diameter of the top disc, and the outer diameter of the edge may be approximately the same size as the outer diameter of the sleeve. The second ring or washer 24 may therefore have a surface 24b which faces away from the interior of the packaging container and against which the disc 20 is sealed, and an edge 24c which extends around the periphery of the disc. The edge 24c in this example is provided with a flat top surface which faces outward from the packaging container and which is substantially parallel to the surface 24b against which the top disc 20 rests. Said surface of the edge 24c may act as a "window" for the sealing, described below, of the sealing surfaces 22c, 24a. The surface may also function as a drinking lip, i.e. as the lip on a glass or mug against which the consumer may rest their lip. To facilitate drinking or pouring over the edge 24c, the top surface may alternatively be slightly inclined or angled instead of flat.

The washer 24 may have a material thickness diminishing in the radial direction, and may taper in the direction towards the centre of the sleeve as shown for example in figure 9a. At the inner diameter, the material thickness of the washer may be very slight. If the top disc 20 bulges because of the pressure in the packaging container 10, the washer 24 can therefore also bulge. The underside of the washer, i.e. the side of the washer 24 which faces the interior of the packaging container, may therefore be conical or constructed along one or more radii or formed by a combination thereof.

In the vicinity of the edge 24c and the sealing surface 24a, the washer 24 may have a region with a relatively large material thickness. In the regions of the sleeve ring 22 and washer 24 at the separating line between the sealing surfaces 22c, 24a, i.e. where they meet, the material thickness of the respective ring may also increase inwardly towards the packaging container 10 in such a way as to create a pointed form 26 which protrudes inwardly towards packaging container 10. The pointed form 26 enlarges the surface area of the sealing surfaces and can minimise stress concentrations and reduce splitting forces in the seal.

The sleeve ring 22 and the washer 24 may be made from a heat-sealable material such as for example a thermoplastic. The thermoplastic may comprise material selected from the group containing polyolefins, polyesters, polyamides, polycarbonates, polyacetates, ionomers and ethylacryl copolymers. In one example, the thermoplastic is polyester. The sleeve ring 22 may be produced from a substantially opaque material while the washer 24 may be made of a substantially transparent material. The terms "substantially opaque" and "substantially transparent" concern the permeability of the material to laser light. The sleeve ring 22 and the washer 24 are joined together at their mutually corresponding sealing surfaces 22c, 24a. The seal may be achieved by means of laser light, as indicated diagrammatically in figures 14a-b. The substantially transparent material allows laser light through, and the substantially opaque material blocks the laser light, such that part of the interface between the first and the second rings 22, 24 can be fused together. This will be described further below. The sleeve ring 22 may be made opaque to laser light, for example by the addition of a black pigment in the polyester.

Furthermore, the sleeve ring 22 and the washer 24 may be made by injection moulding which can be carried out with only two mould halves.

As stated, the first and the second rings 22, 24 may be sealed to each other at opposite sealing surfaces 22c, 24a. A first sealing surface 22c on the first ring 22 may comprise at least one depression or a protrusion 22c' arranged to fit in a respective depression or protrusion 24a' on the other, opposite sealing surface 24a on the second ring 24 during said sealing. Figures 9b-c show diagrammatically examples of how the

depressions or protrusions 22c', 24a' in the respective rings 22, 24 form a mutually interlocking surface between the rings 22, 24. This allows an increased locking or anchoring effect between the rings 22, 24 in order to facilitate the correct positioning of the rings 22, 24 relative to each other, and/or a larger sealing surface in between. This also allows a larger interface surface between the rings 22, 24, which may also reinforce the seal. Furthermore, the larger surface may allow a reduction in any stress forces between the sealing surfaces since the force or pressure can be distributed over a larger surface. Figure 9b shows a saw-tooth sealing surface 22c, 24a which is formed by a series of depressions or protrusions 22c', 24a' in the respective rings 22, 24. Other configurations of depressions or protrusions 22c', 24a' are also possible. Figure 9c shows an example of a V-shaped depression or protrusion 22c', 24a'. This configuration may also facilitate positioning of the rings 22, 24 relative to each other, since the upper ring can slide into the correct position through the V-shaped sealing surfaces 22c, 24a. The first and/or second ring 22, 24 may also comprise a depression 33 which reduces the contact area in the case where it is desirable for example to use a smaller quantity of sealing energy, such as shorter and/or weaker laser pulses, while the sealing surfaces 22c, 24a continue to allow correct and rapid positioning of the rings 22, 24 relative to each other. Such a depression 33 may also be filled with molten material during a heating process during sealing, so as to create an interlocking effect between the rings 22, 24. The molten material may be the same material as the rings 22, 24 or another material between the sealing surfaces 22c, 24a.

The first and/or second rings 22, 24 may also contain depressions or protrusions 22c', 24a' which are configured for mutual interlocking with a snap mechanism. This is shown diagrammatically in figures 14a-b, where the second ring 24 has a depression 24a' which is snap-locked around a protrusion 22c' in the first ring 22. It is also possible that the situation is reversed, i.e. the second ring 24 has a protrusion 24a' which is snap-locked into a depression 22c' in the first ring 22. This allows greater contact pressure which gives a better seal, e.g. in the case where the rings 22, 24 are sealed by laser light, or another sealing method. Thus no further elements are required for achieving adequate contact pressure on sealing, which can reduce the time for the sealing process and/or make it more reliable. Also, it is easier to achieve positioning of the rings 22, 24 relative to each other. The risk of incorrectly placed rings 22, 24 may thus be reduced, which increases the reliability of the production method and a more secure seal can be achieved. The depression or protrusion 22c', 24a' may also absorb pressure and forces which would otherwise be propagated to the sealing surfaces 22c, 24a. For example, a force oriented axially in figure 14a (i.e. vertically upwards in figure 14a) can be absorbed by the locking surface 29 between the first and second rings 22,

24 which extend in the radial direction. In other words, said depression or protrusion 22c', 24a' may comprise a locking surface 29 adapted for overlap between the first and second rings 22, 24 in the radial direction, in order to lock a relative movement between them in the axial direction perpendicularly to the radial direction. The axial direction is parallel to the longitudinal direction of the sleeve 12. In the same way, forces oriented radially outwardly can be absorbed with a corresponding locking surface 29' which is adapted for overlap between the first and second rings 22, 24 in the axial direction, in order to lock a relative movement between them in the radial direction as illustrated diagrammatically in figure 14b. The locking surfaces 29, 29' may also function as a snap-lock mechanism for coupling the rings 22, 24 together as described above. The first and second rings 22, 24 may comprise one or both of the locking surfaces 29, 29' as described.

Figure 13 shows another example of a depression or protrusion 22c', 24a' in the rings 22, 24. The first ring 22 can engage in the second ring 24 by the interlinking of respective channels 25, 30 in the first and second rings 22, 24. The channels 25, 30 allow several of the advantages described above, e.g. absorption of any forces which would otherwise load the sealing surfaces. In the example in figure 13, the forces which e.g. would otherwise load the disc 20 and its fixing in a rim 27 of the sleeve 12, can instead be propagated to the interlinking of the channels 25, 30; this relieves the load on the sealing surface 34, which in this case is between the rim 27 in the sleeve 12 and a peripheral edge 28 of the disc 20, and keeps this surface intact. The channels 25, 30 between the rings 22, 24 in this example are positioned at a distance from the sealing surface 34 between the rim 27 in the sleeve 12 and a peripheral edge 28 of the disc 20. In other words, the rings 22, 24 are fixed together via the channels 22, 25 while the sealing takes place at the sealing surface 34. Separation of the fixings between the rings 22, 24 and the sealing surface 34 may allow optimization of the respective element and thus lead to fewer compromises. In other words, the rings 22, 24 can be fixed in a robust fashion by the channels 25, 30 while the seal at the sealing surface 34 is made more securely, taking less account of or independently of the force conditions between the rings 22, 24. In certain cases, the disc 20 may bulge because of pressure. The effect of such a bulge can be reduced by fixing the rings 22, 24 with the channels 25, 30 as described.

The disc 20 may thus extend radially outward in order to engage, with a peripheral edge 28 of the disc 20, in a rim 27 in the sleeve 12 so as to form the peripheral sealing surface 34. The channels 25, 30 may be positioned radially inwardly from the peripheral sealing surface 34. Any bulging of the disc 20 then has a reduced effect on the seal of the packaging container, since fixing takes place closer to the

centre of the disc. Positioning the channels 25, 30 towards the centre and inside the packaging container also allows a reduced cross-section of the sealing surface 34 and a more compact packaging container. This in turn brings advantages from a distribution aspect. The rings 22, 24 with channels 25, 30 may be produced by die-casting or injection moulding. Since only two parts are required, i.e. rings 22, 24, die-casting may be used with the advantage that this is a cheaper process. The second ring 24 may have a tapering form towards the centre of the disc 20, as described above. This allows a reduction in any force which may cause damage to the disc 20. The channels 25, 30 allow the rings 22, 24 to be screwed together. When the rings 22, 24 have been screwed together, the seal at the sealing surface 34 can be completed. Figure 13 shows an example where the rings 22, 24 comprise downwardly and upwardly oriented channels 25, 30 respectively. It is possible to reverse this, i.e. the second ring 24 may have a downwardly oriented channel 30 and the first ring 22 may have an upwardly oriented channel 25. Other configurations are also possible which allow the advantages described above. The vertically oriented protrusions or depressions 22c', 24a' which form the channels 25, 30 may be combined with horizontally oriented protrusions or depressions 22c', 24a', as described for example in relation to figure 14a, for e.g. also locking the disc 20 in the axial direction with a locking surface 29 between the first and second rings 22, 24 which overlap in the radial (horizontal) direction.

The description below discloses how a packaging container 10 as described above may be produced. The sleeve 12 may be made from a packaging container substance. The substance may be formed into a tube, in that the one longitudinal edge joins and overlaps the second longitudinal edge. The seal is created for example by induction sealing. In one example, such a closure then takes place at the second end part 12b, i.e. in this case the end part which constitutes part of the bottom of the packaging container. The bottom disc 14 may be punched out of a piece of packaging laminate. Fold lines 16 may be embossed into the disc 14. The bottom disc 14 is designed to form the sleeve part 14a. This may be carried out for example in a punching machine, where the disc 14 is secured with a light pressure against a counterhold which has a hole with a diameter substantially corresponding to the inner diameter of the sleeve 12 of the packaging container. A punching tool in the form of a cylinder with circular cross-section, with a diameter corresponding to the desired inner diameter of the remaining sleeve part 14a, may be pressed down against the bottom disc. The end of the cylinder which comes into contact with the bottom disc 14 may have a rounded edge. The tool, which works with a greater pressure than the pressure which holds the disc 14 in the counterhold, can press the disc 14 down slightly into the counterhold so as to form the sleeve part 14a. The bottom disc 14 may be joined to the

ring 18. The inner casing surface of the sleeve part 14a of the disc may be sealed to the outer casing surface of the second part 18b of the ring. The seal may take place by induction in accordance with the description above. On sealing, a substantial heat development may occur in the fold of the disc 14. This may depend on the folded aluminium film. On folding, the polyester may melt so much that it flows out and fills the fold, which gives a fluid-tight and gas-tight seal, see figure 10. Figure 10 shows a microscopic image of a section through a bottom seal. The region marked A shows only part of the clamping fixture used to analyse specimens in the microscope, while layer B shows the bottom ring 18, and layer C shows the sealing layer in the laminate from which the bottom disc 14 is produced. Furthermore, D indicates the aluminium layer, and layer E is also part of the laminate, namely the paper layer. The picture shows a laminate containing two paper layers E with a binding layer in between. Finally, the layer marked F shows a soft part of the clamping fixture. The sleeve 12 and the bottom disc 14 are joined to the ring 18. The latter may be placed in the sleeve 12 as described above, and two sealing operations performed. The first may take place between the ring 18 and the sleeve 12. The outer casing surface of the first part 18a of the ring 18 can be sealed to the inner casing surface of the sleeve 12 by induction sealing as described above. This seal is fluid-tight and gas-tight. The second seal may take place between the sleeve part 14a and the sleeve 12, i.e. a seal which is laminate to laminate. Here again, induction sealing may be used. This seal can absorb forces which occur against the bottom disc 14 as a consequence of the pressure from the contents of the packaging container. The latter seal may be the only seal made in the case where no strip or ring 18 is used for the packaging container. Preparations may be made for closing the first end part 12a, i.e. the top end part. The outer casing surface of the sleeve ring 22 is sealed to the inner casing surface of the sleeve, e.g. by induction sealing. Like the seal in the bottom end part 12a, an inductor may be used with substantially circular cross-section, which is placed outside the sleeve 12. The top disc 20 may also be prepared by being sealed to the washer 24. This seal too may be made by induction sealing, e.g. with an inductor with substantially circular cross-section. In this case, the inductor may be placed on the top side of the disc, and at the second ring 24, a counterhold may be placed on the underside which in form substantially corresponds to the second ring 24. Then the packaging container 10 may be filled with the selected filling product. Filling may take place by means of a conventional filler of the type used today to fill metal cans, e.g. a so-called rotation filler. After filling, the first end part 12a of the sleeve 12 may be closed with the top disc 20. The washer 24 with top disc 20 may be placed on the sleeve ring 22. The top disc 20 may be secured to the sleeve 22 by means of a retaining pressure. While the disc 20 is

retained on the sleeve 12, the sleeve ring 22 and the washer 24 may be fixed e.g. by means of laser light as shown in the example in figure 14a-b, or for example by heating by induction. If laser light is used, the laser light can be introduced through the "window" 32 in the edge 24c of the washer 24 in the direction towards the sleeve ring 22, in the case where the washer 24 is transparent to laser light. When the light hits the opaque sealing surface 22c in the sleeve ring 22, the light cannot go further but must be converted into thermal energy which can melt the sleeve ring 22 and washer 24 in the sealing zone, i.e. at the interface between the rings 22, 24, so that they are sealed to each other. Alternatively, the sleeve ring 22 may be fixed to the washer 24 without melting, but by melting or otherwise activating a material which can create an adhesion between the sleeve ring 22 and washer 24 when illuminated with laser light. A sealing pressure may be applied to the edge of the washer 24 by one or more pressure rollers. At the same time, the outer casing surface of the sleeve 12 of the packaging container may be supported by support rollers which press against the sleeve 12 inside its end. The sealing pressure, which may amount to the order of 5 MPa, may be applied locally in the vicinity of the point to be light-sealed, i.e. in the region where the laser light spot is focussed. This protects the packaging container 10. To seal the washer 24 and sleeve ring 22 to each other all the way round, the packaging container 10 may be rotated one or more times. Alternatively, the pressure and support rollers may be rotated one or more times while the packaging container 10 remains stationary. The laser light source, the laser head, can either be rotated or the laser light beam can sweep in a revolution around the packaging container 10. If the "window" in the edge 22c is inclined, as stated as an alternative design, this may be compensated on positioning the laser light source, as shown diagrammatically in figure 14b, so that the laser beam is oriented against the window in such a way that after penetrating the window, it can be directed downward against the sealing surfaces 22c, 24a in a direction which substantially coincides with the longitudinal direction of the sleeve.

The corresponding sealing surfaces 22c, 24a of the sleeve ring and washer may be formed with fluting, ribbing, or grooved patterns or with another pattern to increase the plastic flow on laser sealing and give better adhesion, which gives a stronger seal. Alternatively, the surfaces 22c, 24a may be provided with patterns which allow the laser light to be concentrated at certain points which become very strong. Alternatively, the laser light may be directed through a lens which cooperates with lenses produced in the sealing surfaces 22c, 24a, which gives an increased concentration of laser light in certain points.

Although the invention has been described only with respect to a currently preferred embodiment, it should be understood that the invention is not restricted to

this, but a multiplicity of variants and modifications are conceivable within the scope of the attached claims.

The steps in the method described above may be performed in different orders from those described in the example.

The bottom disc 14 in the example described was made of packaging laminate. Alternatively, the disc 14 may be made of the same material as the heat-sealing layer or the first and second rings 22, 24. In the case that a material is used which melts sufficiently to form a fluid-tight and gas-tight closure between the sleeve 12 and the sleeve part 14a of the disc, it is not necessary to use a ring 18. The bottom disc 14 may instead be sealed directly to the sleeve 12 by sealing between the outer casing surface of the sleeve part and the inner casing surface of the sleeve. The bottom disc 14 may be injection-moulded with a finished, smooth sleeve part, i.e. the bottom disc 14 has the form of a "tub". Only examples of layers in the laminate been described. It should however be understood that the laminate may also contain further layers, which for example may have barrier, protective, stiffening or other properties. The laminate may for example contain several fluid-tight layers, for example the outer casing surface of the sleeve may be covered with a fluid-tight layer. Furthermore, the laminate may comprise more than one paper or cardboard layer. If more than one paper or cardboard layer is used, it is often necessary to supplement the laminate with a bonding layer between the paper or cardboard layers, e.g. a polyolefin such as polyether. The bottom disc 14 in the example described is provided with a ring 18. The ring 18 may also be a strip. In the example, it has been described that the sleeve ring 22 in the seal of the first end part 12a has a shoulder part 22b which covers the edge of the sleeve. In an alternative embodiment, the sleeve ring 22 has no shoulder part 22b, but the edge of the sleeve is left uncovered or is otherwise protected or rolled, as shown for example in figure 13 where the sleeve ring has no shoulder part. Where the radii or other shaping on the washer 24 and sleeve ring 22 in the first end part 12a meet, a pointed form may occur. In an alternative embodiment, the sleeve ring 22 and washer 24 may have the same or almost the same radii or shaping where they meet, so that a softer transition is achieved. To protect the edge of the top disc 20, alternative ways of sealing the top disc 20 to the washer 24 may be used. The washer 24 may for example be injection-moulded around the top disc 20. Alternatively, a small part of the edge of the washer 24 may be melted or softened and brought to cover the edge. A further alternative concerns providing the top end part with a third ring, a protective ring, which is sealed to both the top disc 20 and the edge of the washer 24, i.e. at the angle or corner between these. Such a ring may for example be wedge-shaped with a material

thickness tapering in the radial direction and diminishing towards the centre of the washer.

In the example, the seal in the first end part 12a is described as comprising a disc 20 made of laminate and a washer 24 of heat-sealable material such as thermoplastic. Alternatively, the disc 20 may be made of metal material e.g. aluminium. With such a design, the second ring 24 i.e. the washer may be injection-moulded around the aluminium disc. In a further alternative, the disc 20 may be made of heat-sealable material such as thermoplastic instead of packaging laminate. The disc 20 and washer 24 may then be formed of one piece. This means that the two parts can be integrated into a unit during their moulding, which may take place for example by injection-moulding. Thus the washer 24 may be described as forming an edge of the disc 20. Thermoplastics with substantially the same or compatible properties may be used for the disc 20 and the washer 24. The same material may be used for both parts. On closure of the first end part 12a, in the exemplary embodiment described, a first and a second ring 22, 24 are used which are fixed to each other. This type of closure may also be used for closure of the second end part 12b, i.e. a similar or the same closure may be used in both end parts 12a, 12b of the packaging container. Since it is possible to also use an inner tool for sealing the end part which is the first closed of the two, the first and second rings 22, 24 at that end may be formed as one piece. The two parts may thus be integrated into a unit during moulding, which can for example take place by injection moulding. This alternative embodiment is shown in figures 11 and 12. The figures show how the alternative design may be used for sealing the second end part 12b shown above, which as before is the bottom of the packaging container 10. The reference signs used below are, for the sake of simplicity, substantially the same as those used earlier in connection with the description of closure of the top. The first and second rings 22, 24 may, as has just been stated, be formed of one piece. The part of the piece forming the sleeve ring 22 may be sealed to the sleeve 12, and the part of the piece formed by the washer 24 may be sealed to the disc 20. In the fixing between the sleeve ring 22 and washer 24, the part may be formed with a radius on the inside and a radius on the outside in order to reduce the occurrence of stress concentrations. The seal between the disc 20 and the part of the piece formed by the washer 24 may also be made before the disc 20 is placed in the sleeve 12. When the disc 20 is in place, the seal between the sleeve 12 and the part of the piece forming the sleeve ring 22 may be made.

In the exemplary embodiment described, it has been shown that the first end part 12a is the top of the packaging container 10. This need naturally not be the case, but it is evidently possible for it instead to be the bottom. Thus the simplified closure with the

first and second rings 22, 24 made of one piece may be used either for the bottom or the top. On production of the packaging container 10, it is advantageous that at least one end part has the possibility for final sealing, i.e. sealing after filling, which may take place without the aid of an inner tool, and it may therefore be suitable for at least this end part to comprise first and second rings 22, 24 which are separate until sealing. In general, it should be understood that the different variants of closure of the end parts 12a, 12b of the packaging container as described may be combined arbitrarily, provided that the above-mentioned advantage is achieved that at least one of the end parts can be finally sealed without an inner tool after filling the packaging container 10. Induction sealing has been named in this example. The invention is not however limited to this technique, but other sealing techniques may be used such as for example sealing by means of radiofrequency energy, heat or ultrasound energy.

CLAIMS

1. Packaging container (10), in particular for liquid foodstuffs such as drinks, comprising a sleeve (12) with a first and a second end part (12a, 12b), wherein at the first end part (12a), the sleeve (12) is closed by a first disc (20), wherein said first disc (20) is fixedly attached to the sleeve (12) by means of a first and a second ring (22, 24), wherein at least a part of the outer casing surface of the first ring (22) is sealed to an inner casing surface of the sleeve (12), wherein said first disc (20) is sealed to the second ring (24), wherein the second ring (24) is fixed to the first ring (22), and

wherein at said second end part (12b), the sleeve (12) has a first inner circumference and is closed by means of a second disc (14) which has a circumference which is larger than said first inner circumference of the sleeve (12), so that a rim extending around the disc (14) forms a sleeve part (14a) when the disc (14) is arranged to close said second end part (12b), wherein said sleeve part (14a) extends part of the way along the inner casing surface of the sleeve, and wherein a seal is formed between at least a part of the outer casing surface of the sleeve part (14a) and the inner casing surface of the sleeve (12).

2. Packaging container (10), in particular for liquid foodstuffs such as drinks, comprising a sleeve (12) with a first and a second end part (12a, 12b), wherein the sleeve (12) is closed by a disc (20) at the first end part (12a), wherein the disc (20) is fixedly attached to the sleeve (12) by means of a first and a second ring (22, 24), wherein at least a part of the outer casing surface of the first ring (22) is sealed to an inner casing surface of the sleeve (12), wherein said disc (20) is sealed to the second ring (24), and wherein the second ring (24) is fixed to the first ring (22).

3. Packaging container (10) according to Claim 1 or 2, wherein the sleeve (12) has a longitudinal direction, wherein the first ring (22) has an extension in an axial direction which substantially coincides with the longitudinal direction of the sleeve, and wherein the first ring (22) has a material thickness tapering in a direction away from said first end part (12a).

4. Packaging container (10) according to Claim 1 or 2, wherein the second ring (24) has a material thickness tapering towards the disc centre.

5. Packaging container (10) according to Claim 1 or 2 in combination with one of Claims 3 - 4, wherein the sleeve (12) has a first inner circumference at said first end

part (12a), wherein the disc (20) is arranged to have a circumference which is the same as or smaller than said first inner circumference of the sleeve (12), and wherein the second ring (24) has a surface which faces away from the interior of the packaging container and against which the disc (20) is sealed, and an edge (24c) which extends around the periphery of the disc.

6. Packaging container (10) according to Claim 1 or 2 in combination with any of Claims 3 - 5, wherein the first and the second rings (22, 24) are sealed to each other at opposing sealing surfaces (22c, 24a) which are inclined so that they form an angle α against the longitudinal direction of the sleeve.

7. Packaging container (10) according to Claim 1 or 2 in combination with any of Claims 3 - 6, wherein angle α lies within the range of 20 - 70 degrees and is preferably around 45 degrees.

8. Packaging container (10) according to Claim 1 or 2 in combination with any of Claims 3 - 7, wherein the first ring (22) is substantially opaque to laser light, wherein the second ring (24) is substantially transparent to laser light, and wherein the two rings (22, 24) are sealed by means of laser light which is transmitted through the second ring (24) to at least part of the interface between the first and second rings (22, 24).

9. Packaging container (10) according to Claim 1 or 2 in combination with any of Claims 3 - 8, wherein the first and/or the second ring (22, 24) is/are made of a heat-sealable material, preferably a thermoplastic.

10. Packaging container (1b) according to Claim 9, wherein the thermoplastic is selected from the group containing polyolefins, polyesters, polyamides, polycarbonates, polyacetates, ionomers and ethylacryl copolymers.

11. Packaging container (1b) according to Claim 10, wherein the thermoplastic is polyester.

12. Packaging container (1b) according to Claim 1 or 2 in combination with any of Claims 3 - 11, wherein the sleeve (12) and/or the disc (20) is/are made from a laminate containing at least one core layer of paper or cardboard, at least one layer comprising a heat-seal-promoting material, and outer layers of heat-sealable material, preferably a thermoplastic.

13. Packaging container (10) according to Claim 1 or 2 in combination with any of Claims 3 - 8, wherein the disc (20) and the second ring (24) are made of one piece.

14. Packaging container (10) according to Claim 1 or 2 in combination with Claim 13, wherein the piece which constitutes the disc and the second ring is produced from a heat-sealable material such as e.g. a thermoplastic.

15. Packaging container (10) according to Claim 1 or 2 in combination with any of Claims 3 - 14, wherein the first and second rings (22, 24) are sealed to each other at opposing sealing surfaces (22c, 24a), wherein a first sealing surface (22c) contains at least one depression or a protrusion (22c') arranged to fit into a respective depression or protrusion (24a') in the other, opposing sealing surface (24a) on said sealing.

16. Packaging container (10) according to Claim 15, wherein said depression or protrusion (22c', 24a') comprises a locking surface (29) adapted to overlap between the first and second rings (22, 24) in the radial direction in order to lock a relative movement between them in the axial direction perpendicularly to the radial direction.

17. Packaging container (10) according to Claim 1 or 2 in combination with any of Claims 3 - 16, wherein the first ring (22) engages in the second ring (24) by interlinking of respective channels (25, 30) in the first and second rings.

18. Packaging container (10) according to Claim 17, wherein the disc (20) extends radially outwardly to engage, with a peripheral edge (28) of the disc, in a rim (27) in the sleeve (12).

19. Packaging container (10) according to Claim 1 or 2 in combination with any of Claims 3 - 18, wherein the first and second rings are made of one piece.

20. Packaging container (10), in particular for liquid foodstuffs such as drinks, comprising a sleeve (12) with a first and a second end part (12a, 12b), wherein at said second end part (12b), the sleeve (12) has a first inner circumference and is closed by means of a disc (14) which has a circumference which is larger than said first inner circumference of the sleeve (12), so that a rim extending around the disc (14) forms a sleeve part (14a) when the disc (14) is arranged to close said second end part (12b), wherein said sleeve part (14a) extends part of the way along the inner casing surface

of the sleeve, and wherein a seal is formed between at least a part of the outer casing surface of the sleeve part and the inner casing surface of the sleeve.

21. Packaging container (10) according to Claim 1 or 20, wherein the second disc (14) has a circumference which is larger than said first inner circumference of the sleeve (12), so that a rim extending around the disc (14) forms a folded sleeve part (14a) when the disc (14) is arranged to close said second end part (12b).

22. Packaging container (10) according to Claim 1 or 20, wherein said sleeve part (14a) extends part of the way along the inner casing surface of the sleeve in the direction towards the interior of the packaging container.

23. Packaging container (10) according to Claim 1 or 20, wherein the edge of the sleeve part is covered by a strip or ring (18), wherein at least part of an outer casing surface of a first part (18a) of the strip or ring (18) is sealed to the inner casing surface of the sleeve, and at least a part of an outer casing surface of a second part (18b) of the strip or ring (18) is sealed to an inner casing surface of the sleeve part (14a) of the disc.

24. Packaging container (10) according to Claim 1 or 20, wherein the disc (14) is provided with a number of fold lines to facilitate forming of said folded sleeve part (14a), wherein the fold lines (16) run from the periphery of the disc, part of the way into the centre of the disc (14), along geometric lines which substantially intersect the centre of the disc.

25. Packaging container (10) according to Claim 1 or 20 in combination with Claim 23, wherein the ring or strip (18) is made from a heat-sealable material, such as e.g. a thermoplastic.

26. Packaging container (10) according to Claim 25, wherein the thermoplastic is selected from the group containing polyolefins, polyesters, polyamides, polycarbonates, polyacetates, ionomers and ethylacryl copolymers.

27. Packaging container (10) according to Claim 26, wherein the thermoplastic is polyester.

28. Packaging container (10) according to Claim 1 or 20, wherein the sleeve (12) and/or the disc (14) is/are made from a laminate containing at least one core layer of paper or cardboard, at least one layer comprising a heat-seal-promoting material, and outer layers of heat-sealable material, preferably a thermoplastic.

29. Method (100) for sealing by means of a disc (20) a first end part (12a) of a sleeve (12) to form a packaging container (10), in particular for liquid foodstuffs such as drinks, wherein the method comprises the steps of

sealing (101) at least a part of an outer casing surface of a first ring (22) to an inner casing surface of the sleeve (12),

sealing (102) said disc (20) to a second ring (24), and

fixing (103) the first and second rings (22, 24) to each other.

30. Method according to Claim 29, wherein it comprises the step of

filling (102') the packaging container (10) with filling product before the step of fixing the first and second rings (22, 24) to each other.

31. Method (200) for sealing by means of a disc (14) a second end part (12b) of a sleeve (12), which second end part (12b) has a first inner circumference, to form a packaging container (10), in particular for liquid foodstuffs such as drinks, wherein the method comprises the steps of

producing (201) said disc (14) with a circumference which is larger than said first inner circumference of the sleeve (12),

forming (202) the disc (14) so that a rim extending around the disc (14) at least forms a sleeve part (14a),

arranging (203) the disc (14) in the sleeve (12) so that said sleeve part (14a) is arranged to extend part of the way along the sleeve longitudinal direction, and

sealing (204) at least a part of the outer casing surface of the sleeve part to the inner casing surface of the sleeve.

32. Method according to Claim 31, wherein it comprises the step of

covering (205) the edge of the sleeve part with a strip or ring (18),

sealing (206) at least a part of an outer casing surface of a first part (18a) of the strip or ring (18) to the inner casing surface of the sleeve, and

sealing (207) at least a part of an outer casing surface of a second part (18b) of the strip or ring (18) to an inner casing surface of the sleeve part (14a) of the disc.

33. Method according to Claim 31, comprising

forming (202') the disc (14) so that a rim extending around the disc (14) forms a folded sleeve part (14a).

34. Method according to Claim 31, comprising

arranging (203') the disc (14) in the sleeve (12) so that said sleeve part (14a) is arranged to extend part of the way along the sleeve longitudinal direction in the direction towards the interior of the packaging container.

35. Method (300) for sealing, by means of a first disc (20), a first end part (12a) of the sleeve (12) and by means of a second disc (14), sealing a second end part (12b) of said sleeve (12) to form a packaging container (10), in particular for liquid foodstuffs such as drinks, wherein the method comprises the step of

firstly closing (301) the second end part (12b), which process comprises the steps of

producing (302) said second disc (14) with a circumference which is larger than a first inner circumference of said second end part (12b) of the sleeve,

forming (303) the disc (14) so that a rim extending around the disc (14) at least forms a folded sleeve part (14a),

arranging (304) the disc (14) in the sleeve (12) so that said sleeve part (14a) is arranged to extend part of the way along the sleeve longitudinal direction in the direction towards the interior of the packaging container, and

sealing (305) at least a part of the outer casing surface of sleeve part to the inner casing surface of the sleeve, and

beginning the closure (306) of the first end part (12a) by sealing at least a part of an outer casing surface of a first ring (22) to the inner casing surface of the sleeve,

filling (307) the packaging container (10) with filling product, and after filling, completing the started closure of the first end part (12a) by the step of

fixing (308) the first ring (22) to a second ring (24), where the first disc (20) is sealed to the second ring (24).

36. Method according to Claim 35, wherein the process of closing the second end part (12b) furthermore comprises the steps of

covering (304') the edge of the sleeve part with a strip or ring (18),

sealing (305') at least a part of an outer casing surface of a first part (18a) of the strip or ring (18) to the inner casing surface of the sleeve, and

sealing (305'') at least a part of an outer casing surface of a second part (18b) of the strip or ring (18) to an inner casing surface of the sleeve part (14a) of the disc.

37. Method according to Claim 36, wherein closure of the second end part (12b) takes place by

firstly forming (303') the sleeve part (14a) of the disc (14),

sealing (305'') at least a part of an outer casing surface of a second part (18b) of the strip or ring (18) to an inner casing surface of the sleeve part (14a) of the disc,

arranging (304'') the disc (14) and the ring (18) sealed to the disc (14) in the sleeve (12),

sealing (305''') at least a part of the outer casing surface of the sleeve part to the inner casing surface of the sleeve, and sealing at least a part of an outer casing surface of a first part (18a) of the strip or ring (18) to the inner casing surface of the sleeve.

38. Method according to any of Claims 35 - 37, wherein sealing between the first and the second ring (22, 24) takes place by means of laser light.

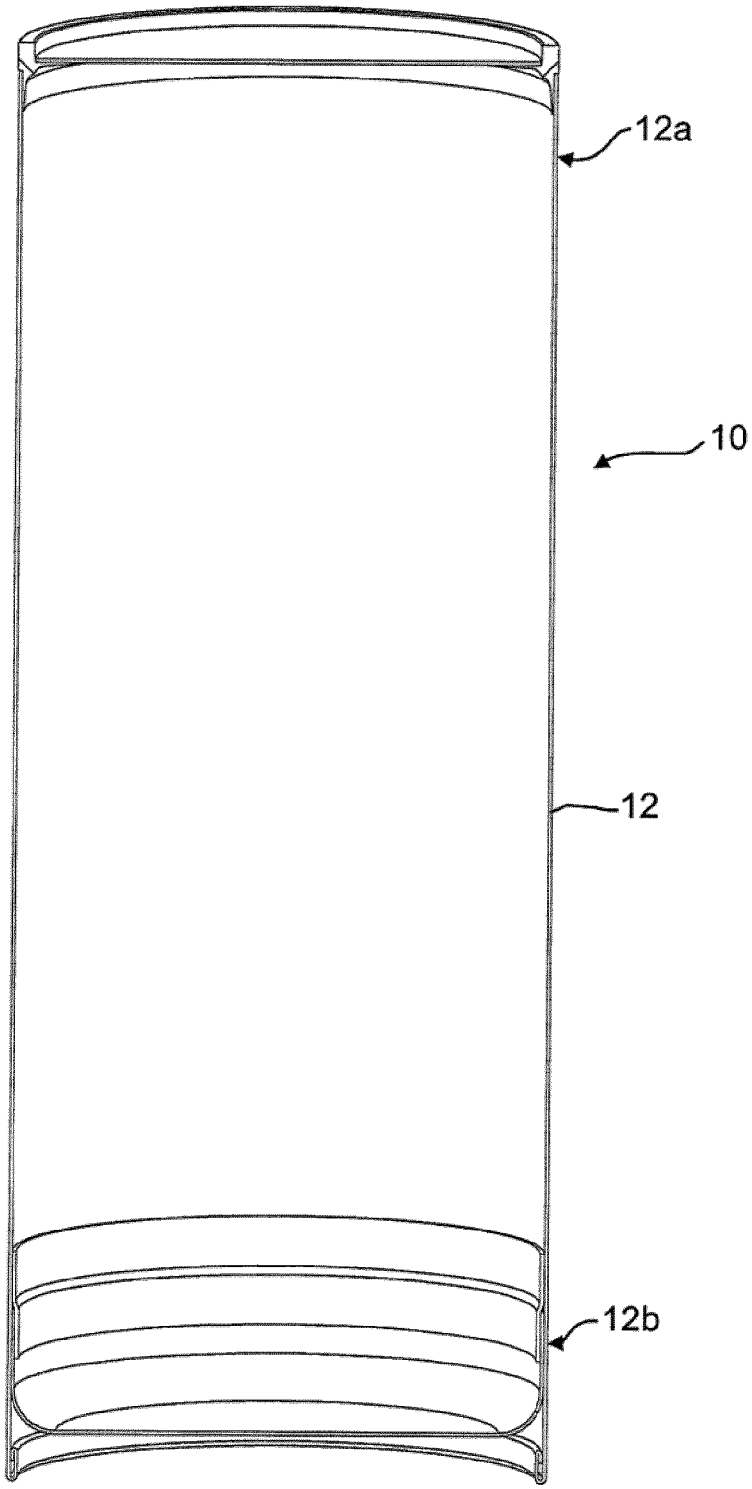

Fig. 1

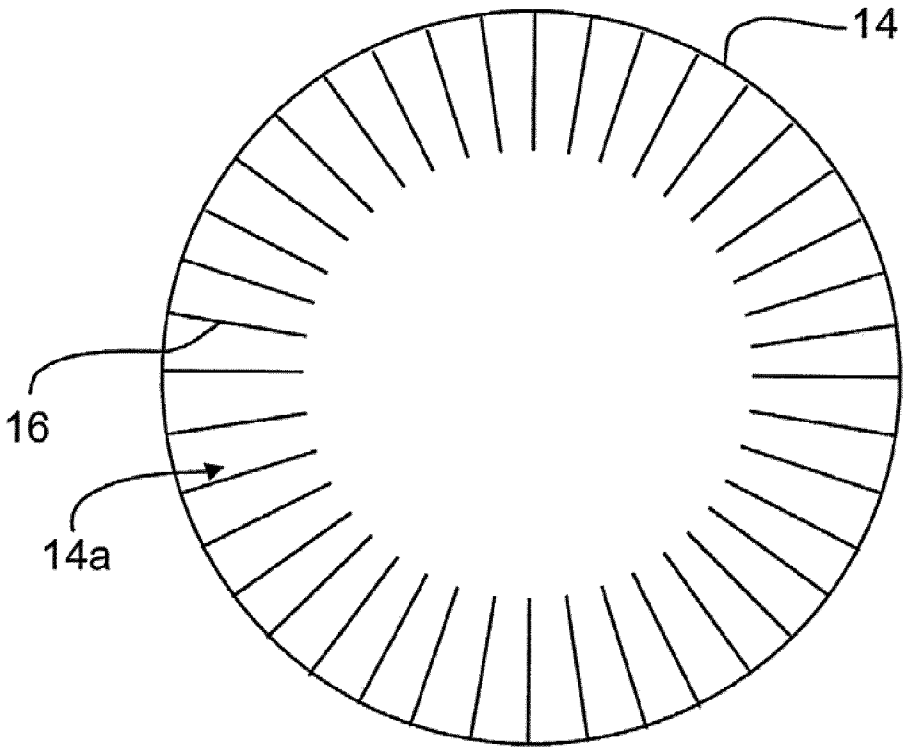

Fig. 2

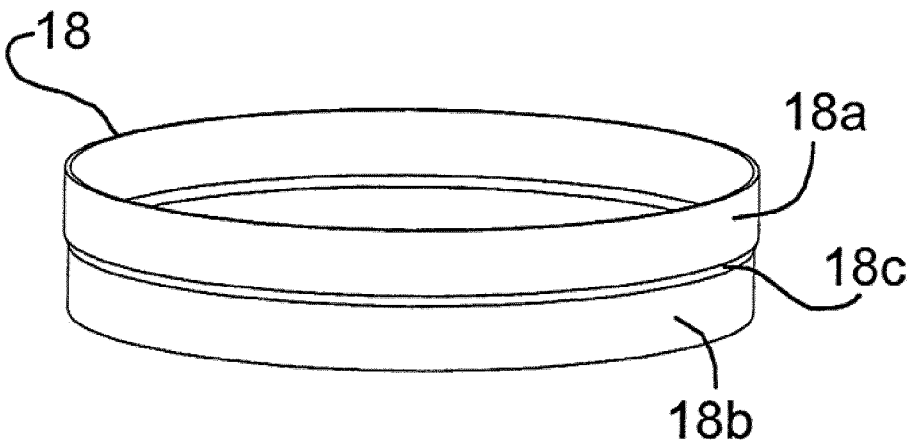

Fig. 3

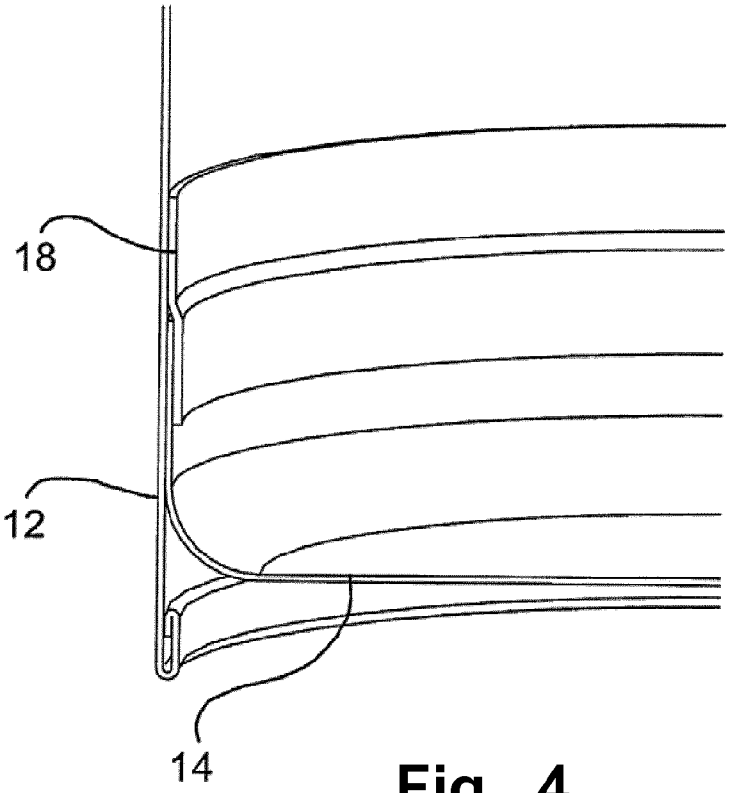

Fig. 4

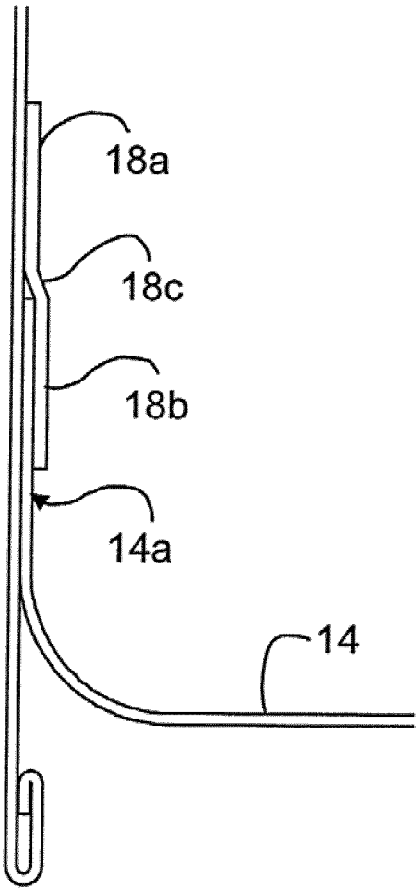

Fig. 5

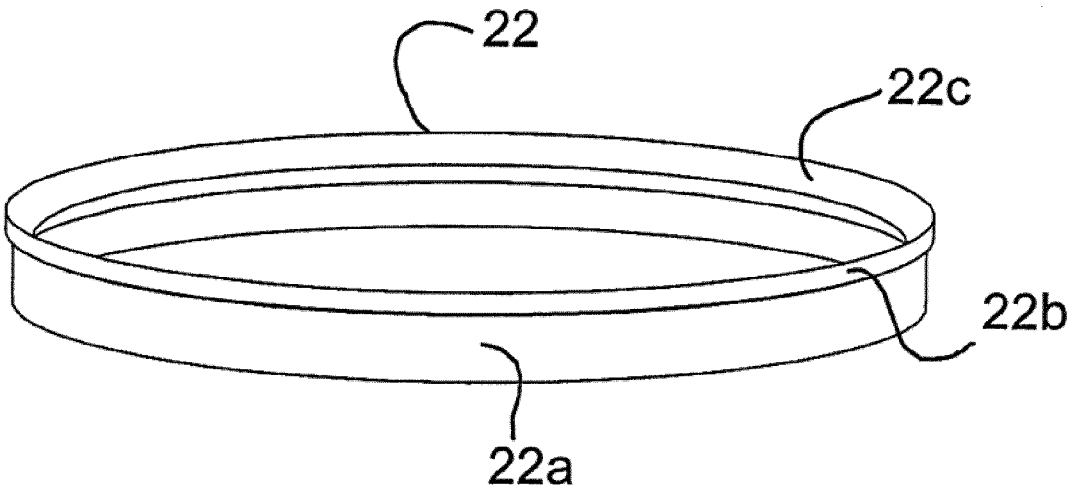

Fig. 6

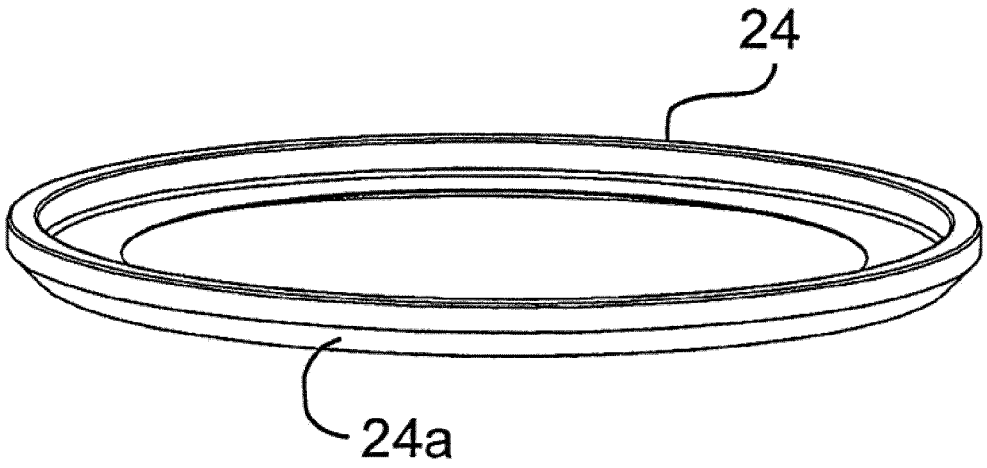

Fig. 7

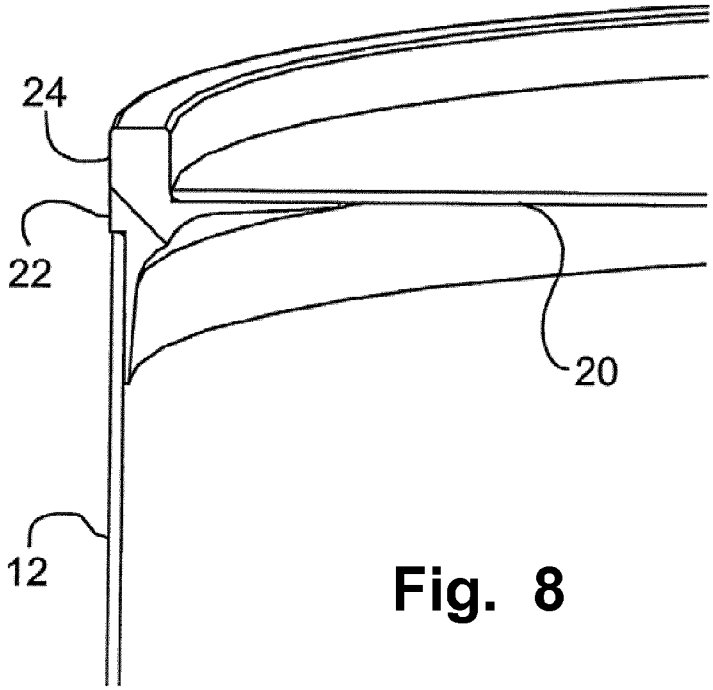

Fig. 8

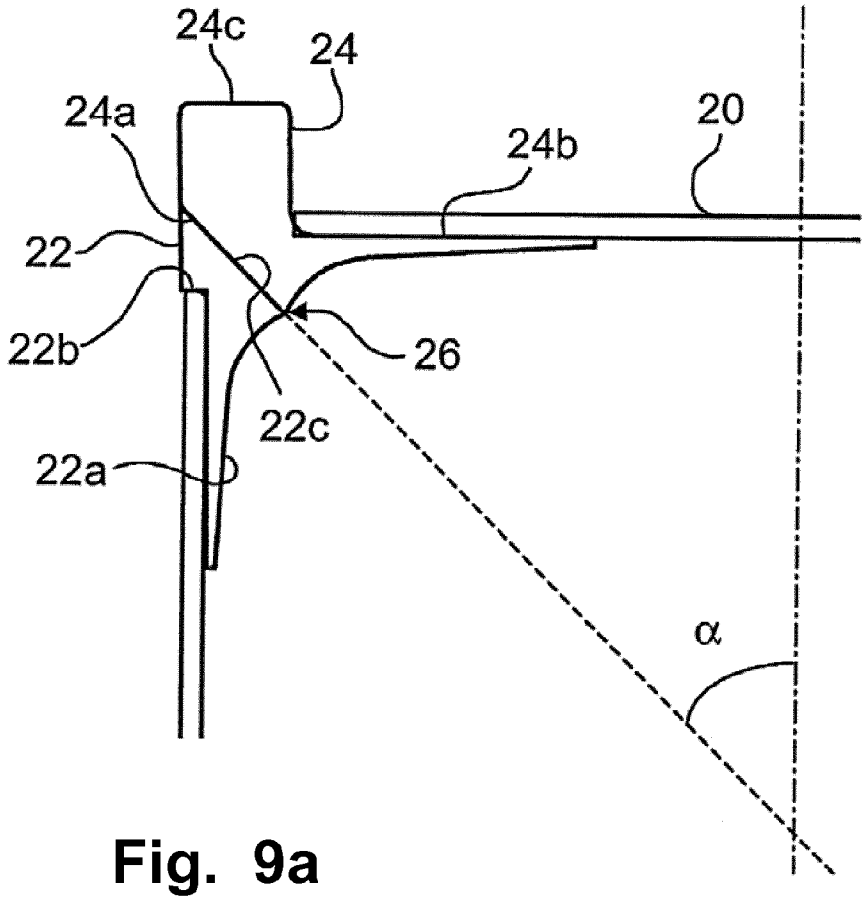

Fig. 9a

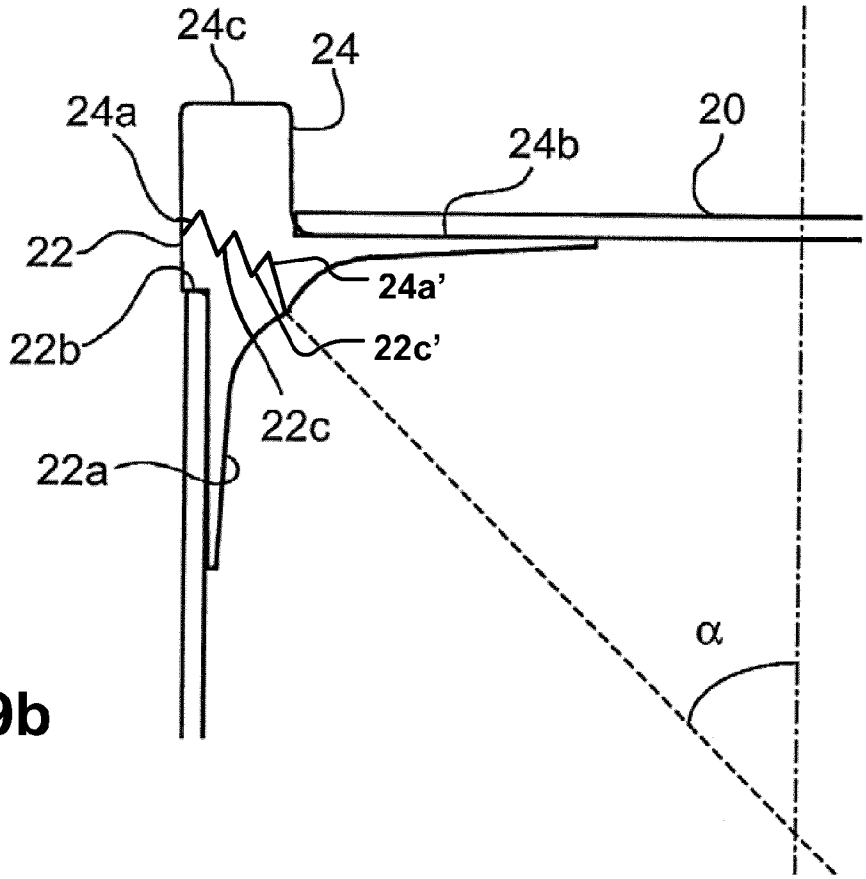
24c
24
24a
20
24b
22
24a'
22b
22c'
22c
22a
α

Fig. 9b

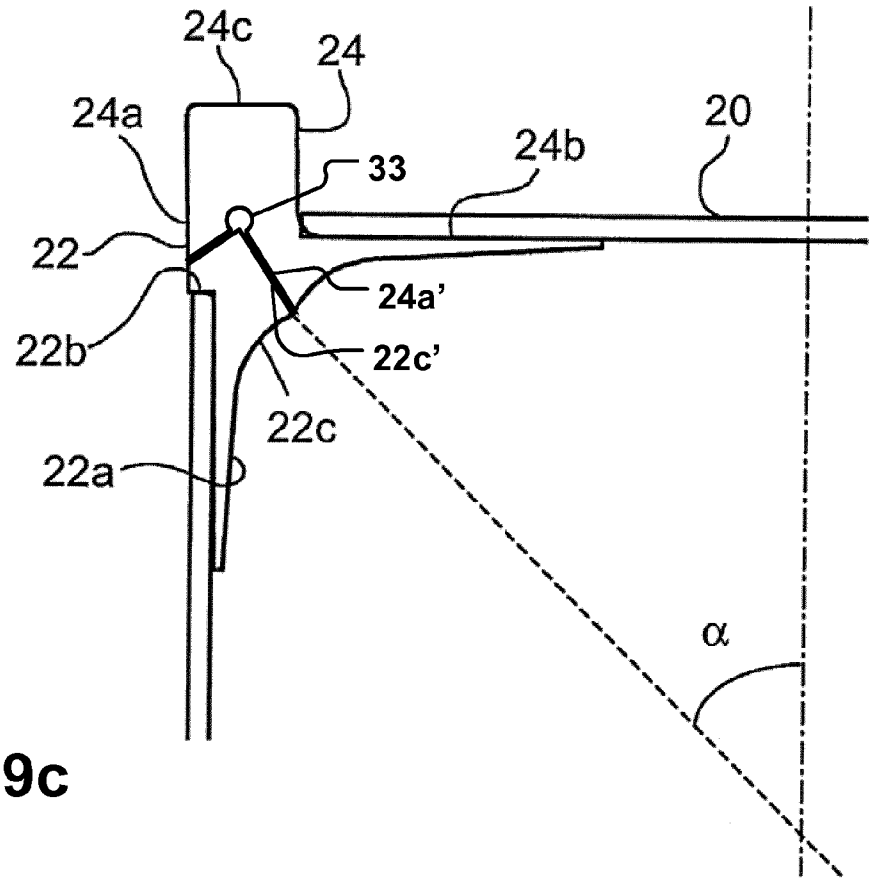
24c
24
24a
20
24b
33
22
24a'
22b
22c'
22c
22a
α

Fig. 9c

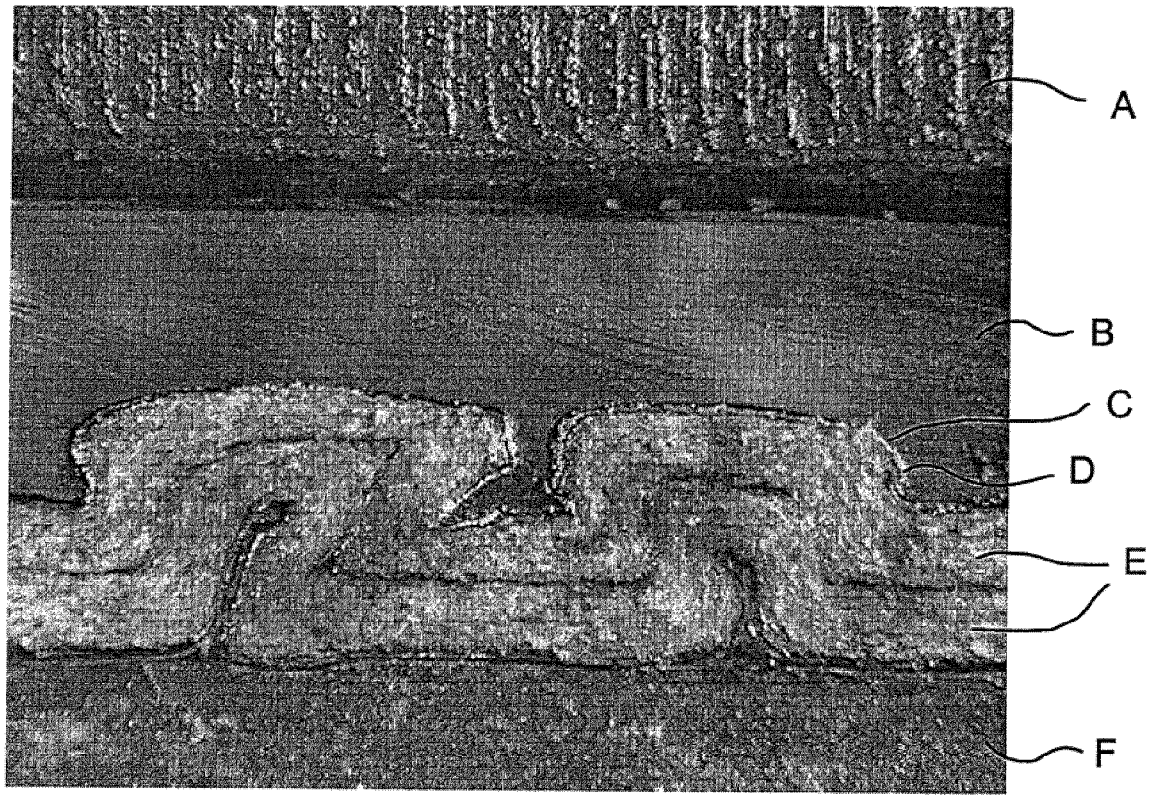

Fig. 10

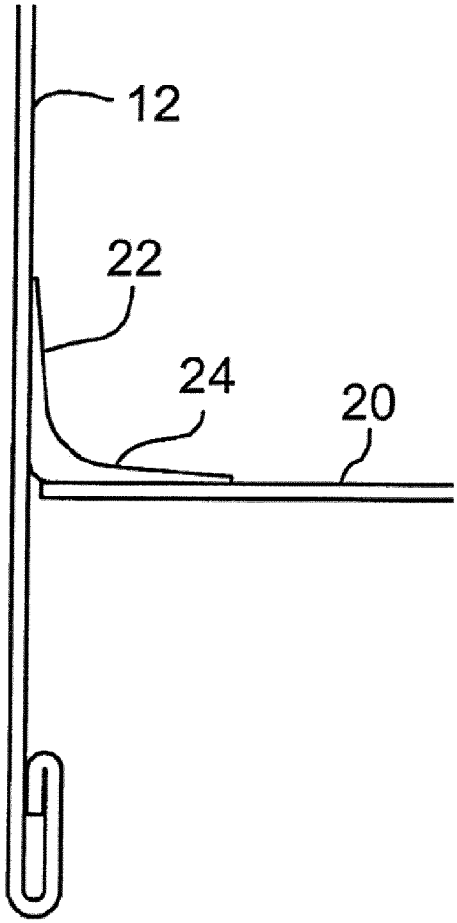

Fig. 11

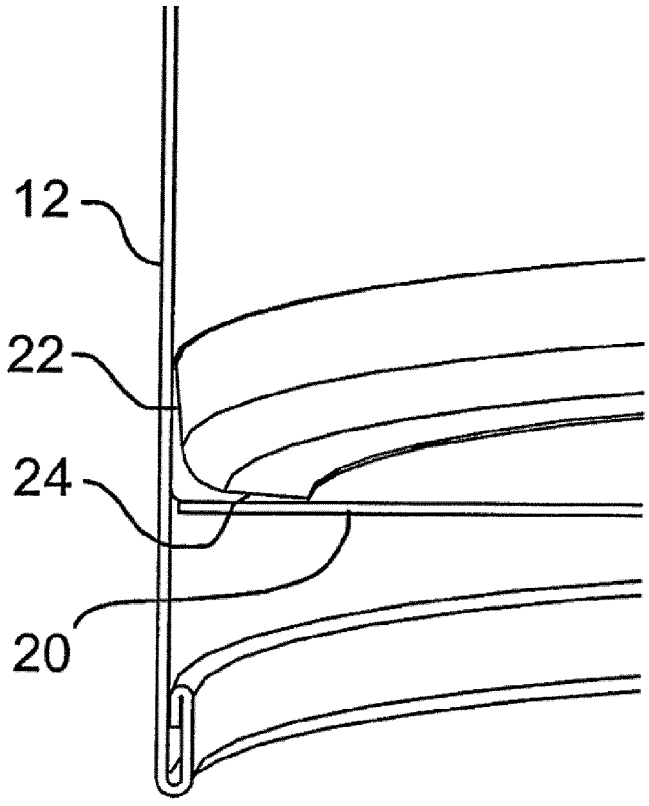

Fig. 12

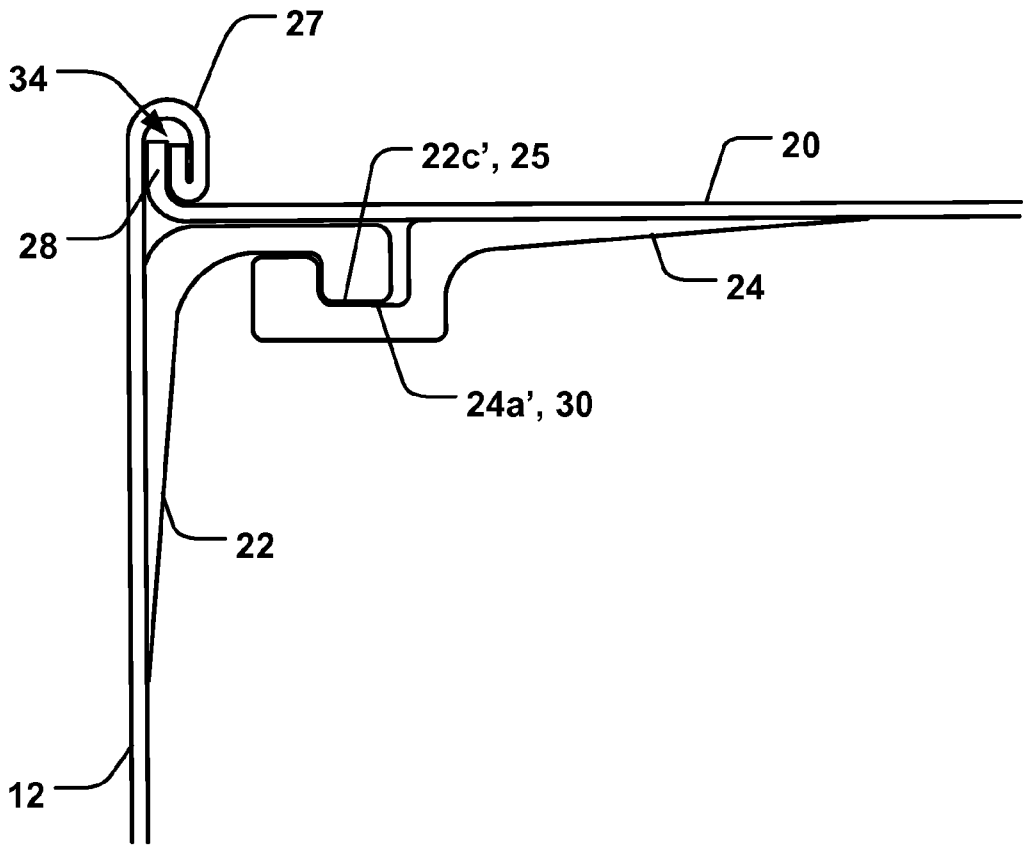

Fig. 13

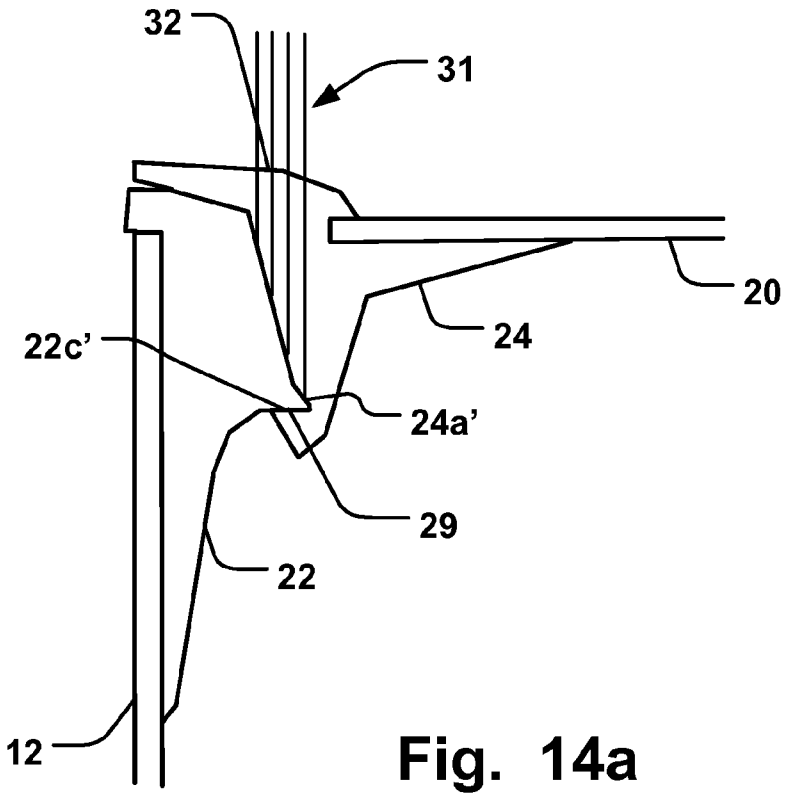

Fig. 14a

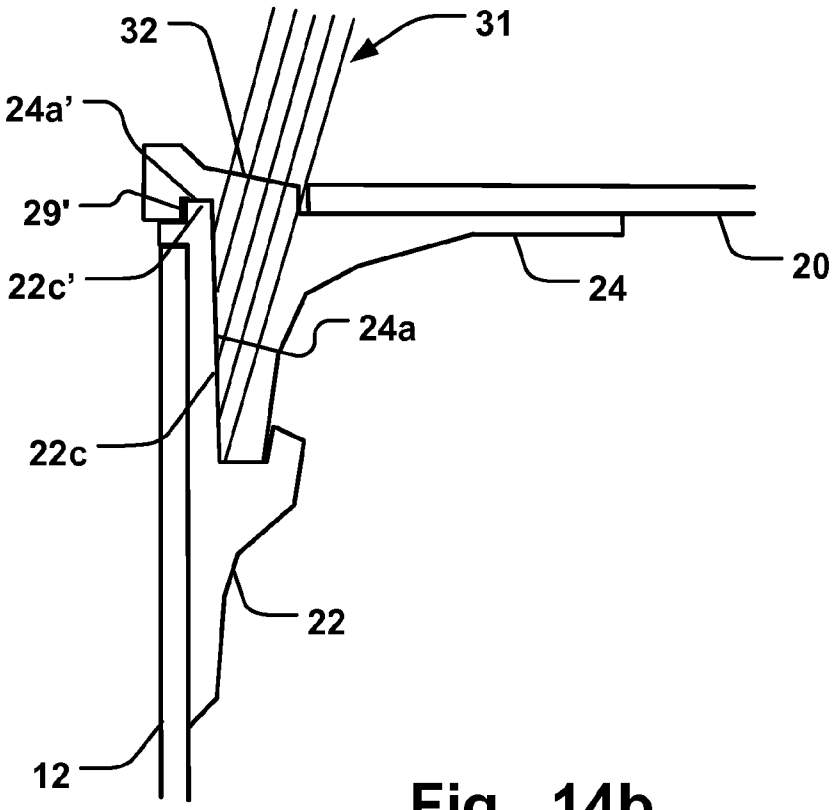

Fig. 14b

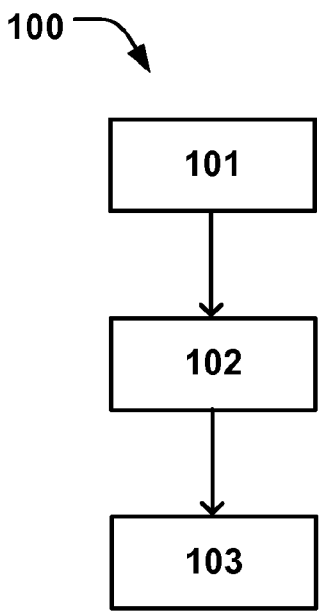

Fig. 15a

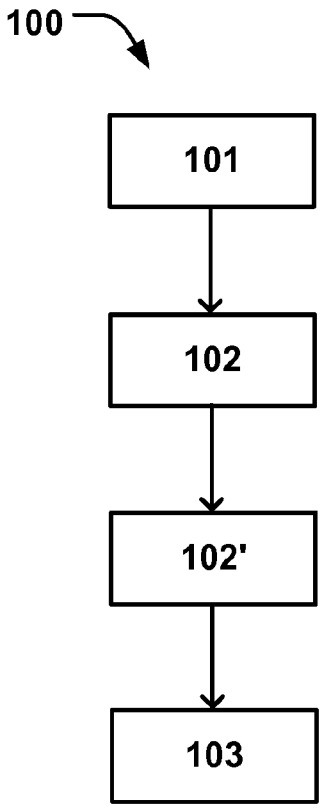

Fig. 15b

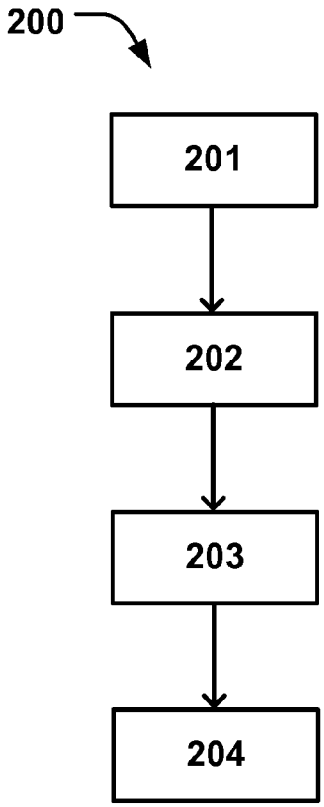

Fig. 16a

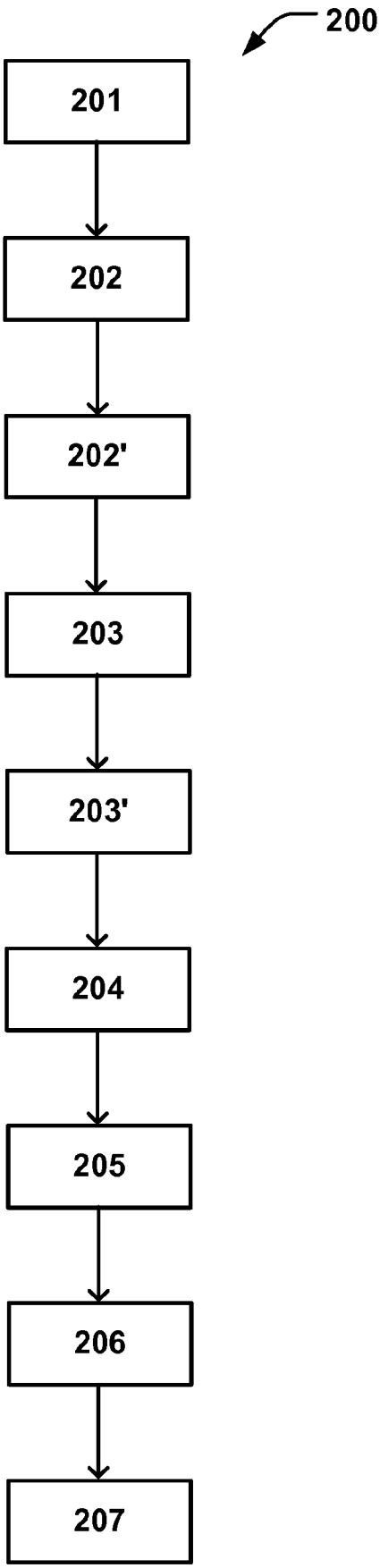

Fig. 16b

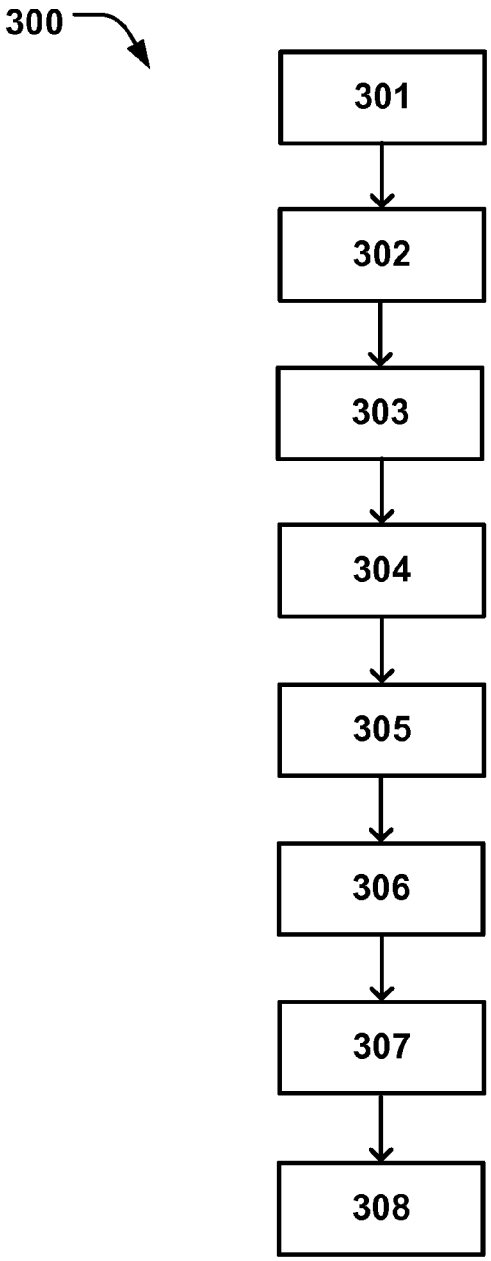

Fig. 17a

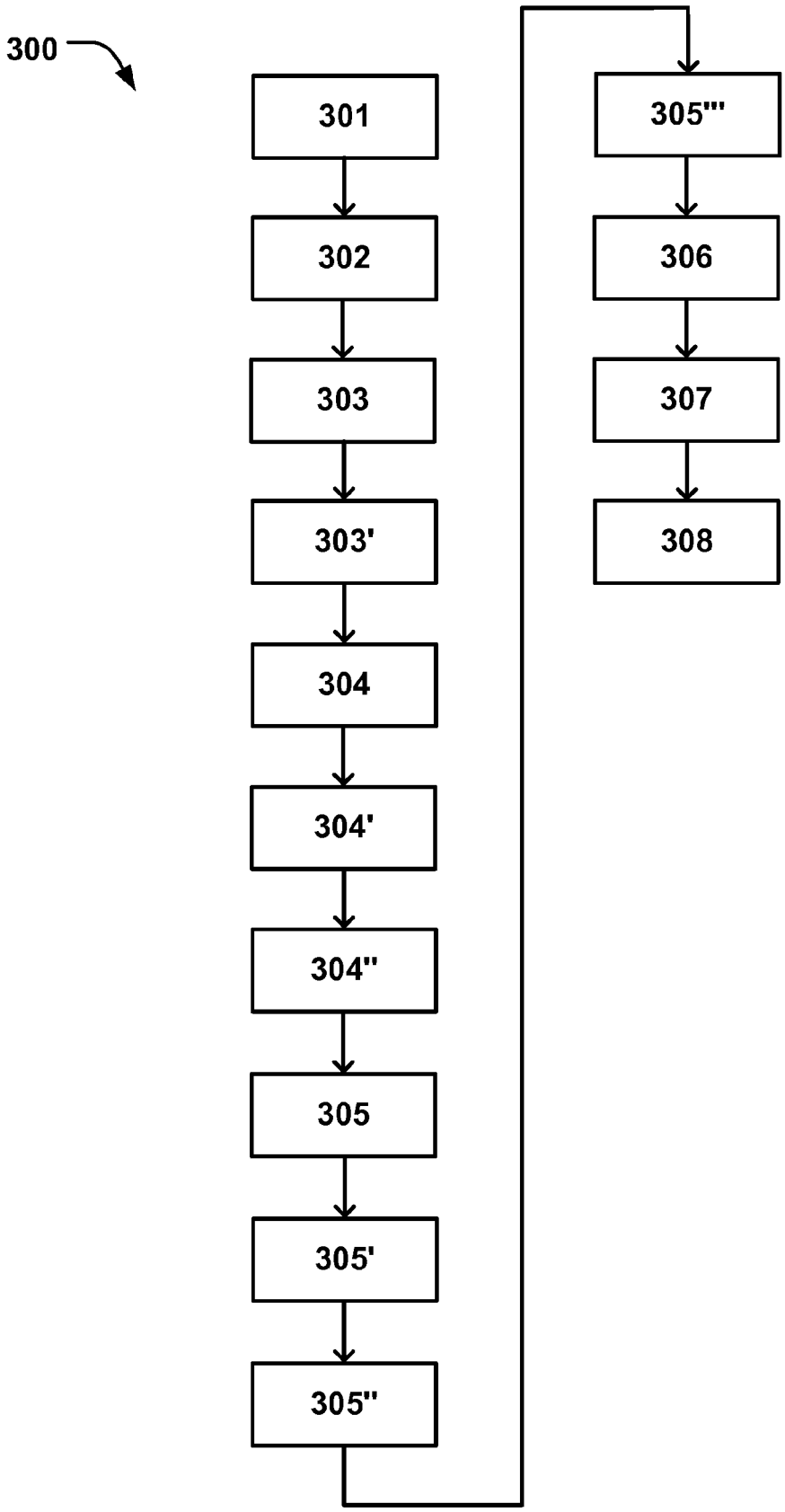

Fig. 17b

INTERNATIONAL SEARCH REPORT

International application No
PCT/EP2018/075632

A. CLASSIFICATION OF SUBJECT MATTER
INV. B65D8/00 B65D3/12
ADD.

According to International Patent Classification (IPC) or to both national classification and IPC

B. FIELDS SEARCHED

Minimum documentation searched (classification system followed by classification symbols)
B65D

Documentation searched other than minimum documentation to the extent that such documents are included in the fields searched

Electronic data base consulted during the international search (name of data base and, where practicable, search terms used)
EPO-Internal, WPI Data

C. DOCUMENTS CONSIDERED TO BE RELEVANT

Category*	Citation of document, with indication, where appropriate, of the relevant passages	Relevant to claim No.
X Y A	EP 1 882 637 A1 (Q BAG PACKAGING MACHINERY GMBH [DE]) 30 January 2008 (2008-01-30) paragraph [0005] - paragraph [0010] paragraph [0015] - paragraph [0022] paragraph [0039]; figures 1,2	1-3,9, 13,14,29 5,12,19, 35 4,6-8, 18,30,38

X Y A	WO 2016/126193 A1 (Å&R CARTON LUND AKTIEBOLAG [SE]) 11 August 2016 (2016-08-11) page 2, line 10 - page 4, line 13 page 20, line 21 - page 21, line 4; figures 1-5	1,2,29, 30,35 3,10-12 13

	-/--	

[X] Further documents are listed in the continuation of Box C.

[X] See patent family annex.

* Special categories of cited documents :

"A" document defining the general state of the art which is not considered to be of particular relevance

"E" earlier application or patent but published on or after the international filing date

"L" document which may throw doubts on priority claim(s) or which is cited to establish the publication date of another citation or other special reason (as specified)

"O" document referring to an oral disclosure, use, exhibition or other means

"P" document published prior to the international filing date but later than the priority date claimed

"T" later document published after the international filing date or priority date and not in conflict with the application but cited to understand the principle or theory underlying the invention

"X" document of particular relevance; the claimed invention cannot be considered novel or cannot be considered to involve an inventive step when the document is taken alone

"Y" document of particular relevance; the claimed invention cannot be considered to involve an inventive step when the document is combined with one or more other such documents, such combination being obvious to a person skilled in the art

"&" document member of the same patent family

Date of the actual completion of the international search	Date of mailing of the international search report
13 December 2018	19/03/2019

Name and mailing address of the ISA/	Authorized officer
European Patent Office, P.B. 5818 Patentlaan 2 NL - 2280 HV Rijswijk Tel. (+31-70) 340-2040, Fax: (+31-70) 340-3016	Mans-Kamerbeek, M

2

Form PCT/ISA/210 (second sheet) (April 2005)

C(Continuation). DOCUMENTS CONSIDERED TO BE RELEVANT

Category*	Citation of document, with indication, where appropriate, of the relevant passages	Relevant to claim No.
X	EP 0 141 792 A2 (AKERLUND & RAUSING AB [SE]) 15 May 1985 (1985-05-15) page 1, last paragraph - page 3, paragraph 1 page 7, last paragraph; figure 11	2,4, 9-11, 13-17

X	DE 203 13 059 U1 (ITALIAANDER GISELA [DE]) 27 January 2005 (2005-01-27)	1,2
Y	paragraph [0020] - paragraph [0021]; figures 2, 5	5,19

Y	DE 33 22 976 A1 (HOERAUF MICHAEL MASCHF [DE]) 10 January 1985 (1985-01-10) page 4, paragraph 1 - page 8, paragraph 3; figure 1	3,10,11, 35

X	WO 98/32666 A1 (TETRA LAVAL HOLDINGS & FINANCE [CH]; HERMODSSON GOERAN [SE]) 30 July 1998 (1998-07-30) page 7, line 36 - page 8, line 8; figure 5	1,2

X	DE 10 2013 221721 A1 (BOSCH GMBH ROBERT [DE]) 30 April 2015 (2015-04-30) paragraph [0022] - paragraph [0024] paragraph [0028]; figures 1, 3	1,2

INTERNATIONAL SEARCH REPORT

International application No.
PCT/EP2018/075632

Box No. II Observations where certain claims were found unsearchable (Continuation of item 2 of first sheet)

This international search report has not been established in respect of certain claims under Article 17(2)(a) for the following reasons:

1. ☐ Claims Nos.:
because they relate to subject matter not required to be searched by this Authority, namely:

2. ☐ Claims Nos.:
because they relate to parts of the international application that do not comply with the prescribed requirements to such an extent that no meaningful international search can be carried out, specifically:

3. ☐ Claims Nos.:
because they are dependent claims and are not drafted in accordance with the second and third sentences of Rule 6.4(a).

Box No. III Observations where unity of invention is lacking (Continuation of item 3 of first sheet)

This International Searching Authority found multiple inventions in this international application, as follows:

see additional sheet

1. ☐ As all required additional search fees were timely paid by the applicant, this international search report covers all searchable claims.

2. ☐ As all searchable claims could be searched without effort justifying an additional fees, this Authority did not invite payment of additional fees.

3. ☐ As only some of the required additional search fees were timely paid by the applicant, this international search report covers only those claims for which fees were paid, specifically claims Nos.:

4. ☒ No required additional search fees were timely paid by the applicant. Consequently, this international search report is restricted to the invention first mentioned in the claims; it is covered by claims Nos.:

1-19, 29, 30, 35, 38

Remark on Protest

☐ The additional search fees were accompanied by the applicant's protest and, where applicable, the payment of a protest fee.

☐ The additional search fees were accompanied by the applicant's protest but the applicable protest fee was not paid within the time limit specified in the invitation.

☐ No protest accompanied the payment of additional search fees.

FURTHER INFORMATION CONTINUED FROM PCT/ISA/ 210

This International Searching Authority found multiple (groups of) inventions in this international application, as follows:

1. claims: 1-19, 29, 30, 35, 38

   Packaging container and method of sealing such container, the container having a first end closure comprising a disc, attached to a first and second ring structure, which structure is sealed to the inner sleeve surface.

   ---

2. claims: 1, 20-28, 31-38

   Packaging container and method of sealing such container, the container having a second end closure comprising a disc, forming a sleeve part that is sealed directly to the inner sleeve surface.

INTERNATIONAL SEARCH REPORT

Information on patent family members

International application No
PCT/EP2018/075632

Patent document cited in search report	Publication date	Patent family member(s)	Publication date
EP 1882637 A1	30-01-2008	AT 540871 T	15-01-2012
		DE 102006036137 A1	31-01-2008
		EP 1882637 A1	30-01-2008
WO 2016126193 A1	11-08-2016	AR 104667 A1	09-08-2017
		CN 107000856 A	01-08-2017
		EP 3253657 A1	13-12-2017
		SE 1550125 A1	06-08-2016
		US 2018016038 A1	18-01-2018
		WO 2016126193 A1	11-08-2016
EP 0141792 A2	15-05-1985	DE 3477917 D1	01-06-1989
		EP 0141792 A2	15-05-1985
		SE 444423 B	14-04-1986
DE 20313059 U1	27-01-2005	NONE	
DE 3322976 A1	10-01-1985	CA 1206025 A	17-06-1986
		DE 3322976 A1	10-01-1985
		US 4531930 A	30-07-1985
WO 9832666 A1	30-07-1998	AT 232815 T	15-03-2003
		AT 261375 T	15-03-2004
		AU 732564 B2	26-04-2001
		BR 9714332 A	21-03-2000
		CA 2278094 A1	30-07-1998
		CN 1245467 A	23-02-2000
		CN 1491757 A	28-04-2004
		DE 69719219 D1	27-03-2003
		DE 69719219 T2	24-07-2003
		DE 69728074 D1	15-04-2004
		DE 69728074 T2	29-07-2004
		EP 0963321 A1	15-12-1999
		EP 1197438 A1	17-04-2002
		ES 2217074 T3	01-11-2004
		JP 4009326 B2	14-11-2007
		JP 2001509115 A	10-07-2001
		RU 2202502 C2	20-04-2003
		US 6399014 B1	04-06-2002
		US 2002066740 A1	06-06-2002
		US 2002190108 A1	19-12-2002
		WO 9832666 A1	30-07-1998
DE 102013221721 A1	30-04-2015	DE 102013221721 A1	30-04-2015
		EP 3060491 A1	31-08-2016
		WO 2015058934 A1	30-04-2015