B. D. STEVENS.

BEARING JOINT OF INK FOUNTAINS.

APPLICATION FILED OCT. 8, 1915.

1,231,661. Patented July 3, 1917.

Fig. 1

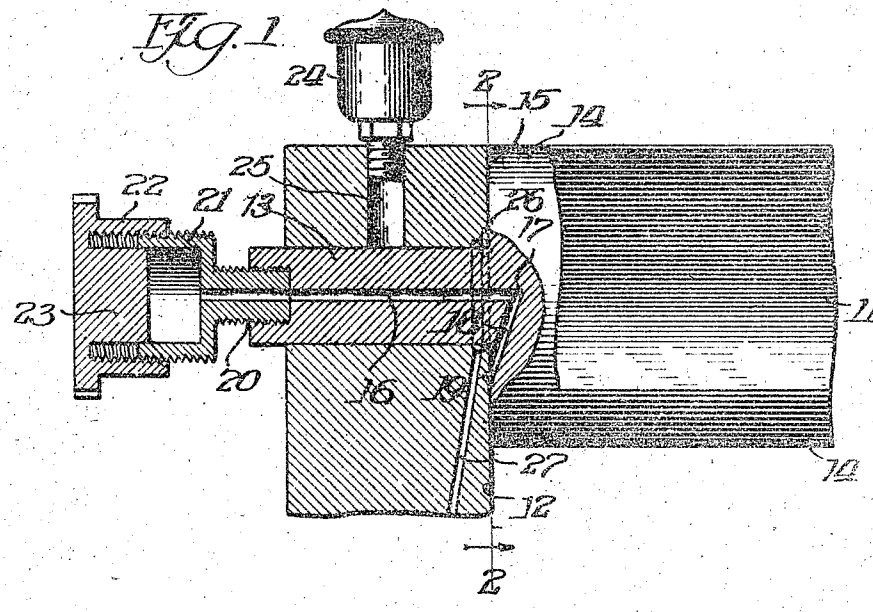

Fig. 2.

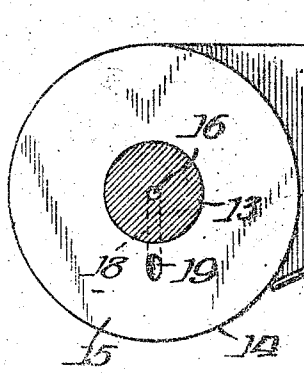

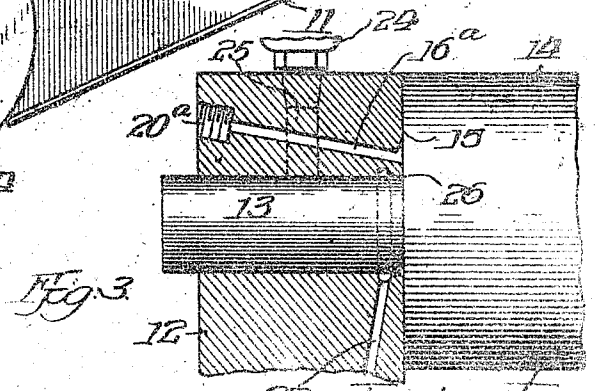

Fig 3

Witnesses:

Fred. C. Larson

Louis J. Geist

Inventor

Burt D. Stevens

By C. C. Linthicum

Atty

UNITED STATES PATENT OFFICE.

BURT D. STEVENS, OF EVANSTON, ILLINOIS, ASSIGNOR TO MIEHLE PRINTING PRESS & MANUFACTURING COMPANY, OF CHICAGO, ILLINOIS, A CORPORATION OF ILLINOIS.

BEARING-JOINT OF INK-FOUNTAINS.

1,231,661. Specification of Letters Patent. Patented July 3, 1917.

Application filed October 8, 1915. Serial No. 54,909.

To all whom it may concern:

Be it known that I, BURT D. STEVENS, a citizen of the United States, residing at Evanston, in the county of Cook and State of Illinois, have invented certain new and useful Improvements in Bearing-Joints of Ink-Fountains, of which the following is a specification.

In connection with ink fountains of printing presses, the end bearing of the ink roller in the end plate of the ink trough, however tight the joints may be, has a tendency to collect ink; and when the ink trough is cleaned in the act of washing up for color, even the greatest care will not entirely remove the ink from the bearing joints and it will later work out into the color causing streaks and resulting in imperfect work.

The object of the present invention is the prevention of the entrance of the ink into the bearing joints in the first instance and thereby avoid all danger of this subsequent working out of the ink into an ink of different color.

I accomplish this invention by continuously charging the journal of the ink roll from within with a substance, preferably having lubricating qualities, such as cup grease, vaseline or the like, but essentially inert, neutral as to color and miscible with ink, which substance will fill the bearing joints and will have an effluent tendency, whereby it will not only prevent the entrance of the ink to the joints but will keep the ink away from the joints.

In order that the invention may be readily understood by those skilled in the art, I have in the accompanying drawings and in the detailed description based thereon set forth a preferred embodiment of the invention. As, however, it will be obvious that the invention may be embodied in other varied constructional forms, it will be understood that the drawing and description are to be taken in an illustrative and not in an unnecessarily limiting sense. In the drawings—

Figure 1 is a fragmentary view showing the end of an ink roll and shaft partially in longitudinal vertical section and partially broken away to illustrate the application of the invention;

Fig. 2 is a vertical transverse section on the line 2—2 of Fig. 1; and

Fig. 3 is a vertical sectional view through a modification.

Having particular reference to the illustration, the reference numeral 11 designates the ink plate of a trough having the end plate 12, in which end plate the journal 13 of the ink roll 14 has its bearing, the roll also having an end bearing joint 15 between its end shoulder portion and the end plate 12 of the trough. Into this bearing joint 15 there is a tendency of the ink to enter from the trough and, as previously stated, it is exceedingly difficult and practically impossible to entirely remove the ink therefrom in washing up for color, with the result that this ink will afterward work out of the joints into the ink in the fountain and cause streaks in the work. I avoid this difficulty as follows:

The journal 13 of the ink roller is provided with an axial longitudinal bore 16 extending from its end inward to the point indicated at 17 and thence at an angle indicated at 18 to the bearing surface of the joint as indicated at 19. Screwed into the end of the journal 13 at 20 is a compression feed cup 21 provided with a cap 22 having a plunger portion 23 adapted to enter the interior of the feed cup 21.

By means of the compression feed cup 21 the bores 16 and 18 are charged with a substance preferably having lubricating qualities and which is inert as to the ink within the ink fountain, that is to say, ineffective in small quantities to modify the physical or chemical properties of the ink. It is also neutral as to color and is miscible with the ink in the fountain. When the cup 22 is screwed upon the feed cup 21 the plunger 23 will serve to force the substance through the bores into the bearing joint and, there will be a slightly effluent tendency which will cause any ink seeking to enter the joint to be crowded out into the trough. Thus the bearing joint 15 will be kept entirely free from ink and whenever it is de-

sired to change the ink in the fountain from one color to another, there will be no collection of ink within the bearing joint which will afterward have to be accounted for. The joint is kept entirely free from ink at all times and thus the danger of color streaks in the work is absolutely avoided.

At 24 is indicated the usual oil cup which supplies oil through the channel 25 to the bearing of the journal 13, an annular channel 26 being employed near the inner end of the journal bearing to collect oil and prevent access of the same to the end bearing 15, the surplus oil being drained away through the channel 27. This prevents the disadvantages which would result from the oil entering the end bearing 15 and being thence introduced to the ink within the trough.

In Fig. 3 is shown a slight modification wherein the ink solvent is introduced to the bearing joint 15 through a port 16^a located within the plate 12 instead of through the journal 13. As in the former case the ink solvent is supplied by means of a compression cup threaded into the plate at 20^a, the solvent being conducted through the port 16^a to the bearing joint 15 throughout which it is dispersed by a general spiral movement and ultimately finds its way gradually from the bearing joint into the ink trough.

I claim:

1. In an ink fountain, the combination of the ink trough, and an ink roller having its end bearing joint exposed to the interior of the trough, the roller having a bore extending to the bearing surface of the joint, and means to supply to such bearing with effluent tendency a substance which is inert relative to the ink in the trough.

2. In an ink fountain, the combination of the ink trough, and an ink roller having its end bearing joint exposed to the interior of the trough, the journal of the roller having a longitudinal bore extending to the bearing surface of the joint, and means to supply through said bore to said bearing with effluent tendency an inert substance.

3. In an ink fountain, the combination of the ink trough, and an ink roller having its end bearing joint exposed to the interior of the trough, the journal of the roller having a longitudinal bore extending laterally to the bearing surface of the joint, and means to supply through said bore to said bearing an inert substance miscible in the ink.

4. In an ink fountain, the combination of the ink trough, and an ink roller having its end bearing joint exposed to the interior of the trough, the journal of the roller having an axial bore extending outwardly to the bearing surface of the joint, and means to supply through said bore to said bearing an inert lubricating substance miscible in the ink.

5. In an ink fountain, the combination of the ink trough, and an ink roller having its end bearing joint exposed to the interior of the trough, a bore extending outwardly from the bearing surface of the joint, and a compression feed cup connected to the entrance of the bore, whereby to supply through said bore to said bearing with effluent tendency an inert lubricating substance miscible in the ink.

6. In an ink fountain, the combination of the ink trough, and an ink roller having its end bearing joint exposed to the interior of the trough, the journal of the roller having an axial bore extending outwardly from the bearing surface of the joint, and a compression feed cup connected to the entrance of the bore, whereby to supply through said bore to said bearing an inert lubricating substance miscible in the ink.

BURT D. STEVENS.

Witnesses:
GEO. H. PECK,
B. F. DVORAK.