PCT WORLD INTELLECTUAL PROPERTY ORGANIZATION
International Bureau

INTERNATIONAL APPLICATION PUBLISHED UNDER THE PATENT COOPERATION TREATY (PCT)

(51) International Patent Classification 5 :		(11) International Publication Number:	WO 93/07690
H04J 3/06, H04L 7/00	A1	(43) International Publication Date:	15 April 1993 (15.04.93)

(21) International Application Number: PCT/US92/06995

(22) International Filing Date: 19 August 1992 (19.08.92)

(30) Priority data:
769,068 30 September 1991 (30.09.91) US

(71) Applicant: MOTOROLA, INC. [US/US]; 1303 East Algonquin Road, Schaumburg, IL 60196 (US).

(72) Inventors: KAZECKI, Henry, L. ; 1323 South Fernandez Avenue, Arlington Heights, IL 60005 (US). BAKER, James, C. ; 8091 Olivia Lane, Hanover Park, IL 60103 (US).

(74) Agents: PARMELEE, Steven, G. et al.; Motorola, Inc., Intellectual Property Dept., 1303 E. Algonquin Road, Schaumburg, IL 60196 (US).

(81) Designated States: CA, GB, JP, KR.

Published
With international search report.

(54) Title: APPARATUS AND METHOD FOR RECOVERING A TIME-VARYING SIGNAL USING MULTIPLE SAMPLING POINTS

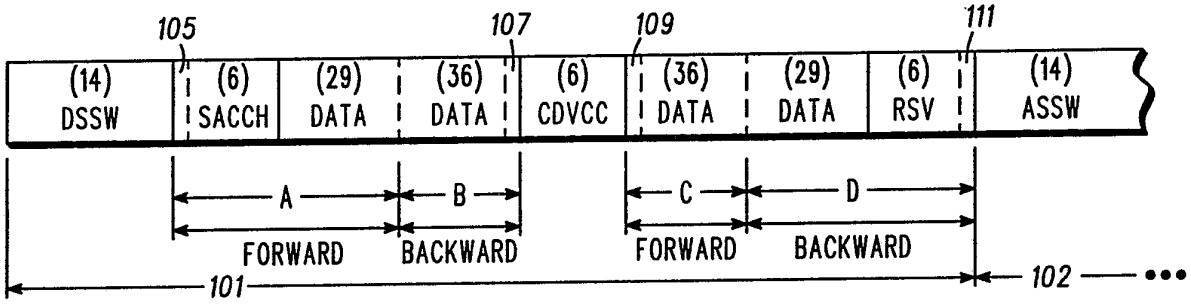

(57) Abstract

The present invention presents an apparatus and method for recovering symbols in a data packet (101) transmitted to a receiver from a remote signal source (204) in a time-varying channel using multiple sampling points. In a digital cellular radiotelephone TDMA system, the receiver (202) performs a complex correlation on the desired slot sync word (DSSW) and the coded digital verification color code (CDVCC) in the data packet (101), and on the adjacent slot sync word (ASSW) in an adjacent data packet (102) to produce a first, second and third optimum sampling point, respectively. The data packet (101) is divided into four regions (A, B, C and D). The symbols in each region (A, B, C and D) are serially recovered using one or more of the multiple sampling points depending on the quality of the sampling point adjacent to each region (A, B, C and D).

FOR THE PURPOSES OF INFORMATION ONLY

Codes used to identify States party to the PCT on the front pages of pamphlets publishing international applications under the PCT.

AT	Austria
AU	Australia
BB	Barbados
BE	Belgium
BF	Burkina Faso
BG	Bulgaria
BJ	Benin
BR	Brazil
CA	Canada
CF	Central African Republic
CG	Congo
CH	Switzerland
CI	Côte d'Ivoire
CM	Cameroon
CS	Czechoslovakia
CZ	Czech Republic
DE	Germany
DK	Denmark
ES	Spain
FI	Finland
FR	France
GA	Gabon
GB	United Kingdom
GN	Guinea
GR	Greece
HU	Hungary
IE	Ireland
IT	Italy
JP	Japan
KP	Democratic People's Republic of Korea
KR	Republic of Korea
LI	Liechtenstein
LK	Sri Lanka
LU	Luxembourg
MC	Monaco
MG	Madagascar
ML	Mali
MN	Mongolia
MR	Mauritania
MW	Malawi
NL	Netherlands
NO	Norway
NZ	New Zealand
PL	Poland
PT	Portugal
RO	Romania
RU	Russian Federation
SD	Sudan
SE	Sweden
SK	Slovak Republic
SN	Senegal
SU	Soviet Union
TD	Chad
TG	Togo
UA	Ukraine
US	United States of America
VN	Viet Nam

Apparatus and Method for Recovering a Time-Varying Signal Using Multiple Sampling Points

Related Applications

This application is a continuation in part of the instant assignee's co-pending applications: serial no. 07/612,656, filed on November 14, 1990, invented by Henry L. Kazecki, Steven H. Goode, Donald W. Dennis, James C. Baker, Kevin L. Baum and Bruce D. Mueller, entitled "Method for Channel Adaptive Detecting/Equalizing"; and Serial No. 07/633,556, filed on December 21, 1990, invented by Henry L. Kazecki and James C. Baker, entitled "Apparatus and Method for Recovering a Time-Varing Signal in a Serial Data System".

This application is related to the instant assignee's co-pending application having docket no. CE00550R, filed on the same date herewith, invented by Henry L. Kazecki and James C. Baker, entitled "Apparatus and Method for Aadaptively Filtering a Time-Varying Signal Using Multiple Filtering Algorithms".

Field of the Invention

The present invention relates generally to information recovery, and more particularly to an apparatus and method for recovering a time-varying signal using multiple sampling points.

Background of the Invention

The rapid expansion of the number of cellular radio telephones coupled with the desire to provide additional services has prompted the development of a digital standard. The standard suggests an increase in system capacity over the previous analog system through the use of digital modulation and speech coding techniques. The standard for the cellular system is described in detail in Electronic Industries Association, Project Number 2398, January 1991, IS-54 (Revision A), entitled Dual-Mode Mobile Station -- Base Station Compatibility Standard. The standard describes in §1.2 a time division multiple access (TDMA) channel 40 milliseconds long divided into six equally sized data packets 6.66 milliseconds long. A data packet is a burst of information characterized by sequentially encoded consecutive pairs of bits, commonly known as symbols.

The standard describes in § 2.1.3.3.1 a linear modulation technique known as $\pi/4$ shifted, differentially encoded quadrature phase shift keying ($\pi/4$ DQPSK). The symbols are transmitted into one of four phase angles ($\pm\pi/4$, $\pm 3\pi/4$) using differential quadrature component signals producing an eight point phase constellation. The symbols are represented by a normalized magnitude vector and a phase angle. The symbols are transmitted as changes in phase rather than absolute phases.

Signal propagation in the radio frequency band, such as the 800 MHz band for cellular radiotelephones, is generally characterized by two types of channel-induced distortion: time dispersion distortion and multipath distortion. These types of distortion are caused by a rapid rate of change of the received data packet's amplitude over time and are predominantly affected by the frequency of the signal, how rapidly the receiver is moving through its environment and large objects in the

vicinity of the receiver. When the amplitude over a portion of the data packet approaches a null, the symbols can be corrupted by noise present in the channel that alters the state of the symbol causing the receiver to detect wrong information.

Time dispersion distortion is usually found in an environment where a large reflecting source, such as a mountain or a tall building, is present. A receiver operating in this environment receives the data packet from a fixed source transmitter and a delayed data packet from the reflecting source. The time delay between the reception of the two data packets results in time dispersion distortion.

Multipath distortion is characterized by many components of the same data packet having different energy levels reaching the receiver at the same time. As a result, the amplitude and phase of a data packet varies over time. This variance is referred to as "Rayleigh fading" of the data packet.

The present challenge is to recover the received symbols in the data packet that were transmitted in the presence of the channel-induced distortion. Typically, the receiver is synchronized to the data packet using a process called correlation. Synchronization is described in Chapter 8 of Digital Communications, Fundamentals and Applications by Bernard Sklar (1988). For systems with rapid acquisition requirements, such as the digital cellular system, the data packet has a synchronization codeword. A corresponding codeword in the receiver is correlated to the data packet until it is matched with the synchronization codeword. A data packet having multiple sampling points per symbol is synchronized to the receiver using the correlation process to determine the sampling point for all the symbols in the data packet. The sampling point of a symbol corresponds to the value of the detected sample when it is closest to on of the eight points on the phase constellation. Symbols recovered at the sampling

point have the best chance of being detected correctly in the presence of channel-induced distortion to minimize the receiver's bit error rate (BER) performance.

Unfortunately, variations in amplitude over the duration of the data packet due to the channel-induced distortion can cause the sampling point for symbol recovery to vary. This situation is particularly apparent in data packets having a long time duration such as in the digital cellular system. Correlation of the receiver to the codeword in the data packet reflects channel conditions only for the instant in time at which correlation occurred. The sampling point determined from correlation codeword in one portion of a data packet may not be optimal for symbols in another portion of the data packet. Additionally, some or all the symbols in the synchronization codeword may be distorted resulting in such poor correlation that the sampling point for symbol recovery would be based upon an estimated sampling point. For an operator of a receiver using this type of radio system in a time-varying channel, the estimated sampling point may cause distorted audio reception or loss of transmitted data or control information.

For many situations, of which a cellular radiotelephone is merely an example, the prior art has not produced an apparatus or method of information recovery to meet the difficult requirement of providing a substantially valid sampling point over the duration of a time-varying signal.

Summary of the Invention

A radio frequency receiver receives sequentially encoded information transmitted from a remote signal source. The information has at least a first and a second synchronous codeword. Each sequential symbol is sampled a predetermined number of times. A portion of the information

forming a data packet includes at least one of the first and the second synchronous codewords. The first and the second synchronous codewords are located within a first and a second window in time. The information is synchronized to the radio frequency receiver at a first and a second time responsive to the located first and second synchronous codewords, respectively, for determining a first and a second sampling point, respectively. The information in the data packet is serially recovered responsive to at least the first sampling point.

Brief Description of the Drawings

FIG. 1 illustrates the format for a data packet in a TDMA system having regions that are processed in accordance with the present invention.

FIG. 2 is a block diagram for a radiotelephone transceiver incorporating a receiver for receiving the data packet of FIG. 1.

FIG. 3A shows a portion of the data packet of FIG. 1 having eight samples (a-h) per symbol (1-10) and including the CDVCC.

FIG. 3B is a plot of eight magnitude output signals from the complex correlator of FIG. 2.

FIG's. 4A and 4B describe the decision process carried out in the digital signal processor of FIG. 2 for recovering symbols in the data packet of FIG. 1 using multiple sampling points.

Detailed Description of a Preferred Embodiment

FIG. 1 illustrates the format for a data packet 101 in a TDMA system. A receiver 202 (shown in FIG. 2) selectively receives digital information transmitted from a remote signal source 204. The digital information includes a plurality of symbols. A predetermined number of symbols forms a data packet 101 having information intended for the receiver 202.

In the TDMA system, the data packet 101 includes one codeword providing synchronization, a desired slot sync word (DSSW), and a coded digital voice color code (CDVCC). A second data packet 102 adjacent to the data packet 101 also has a codeword for synchronization designated as the adjacent slot sync word (ASSW) because of its location to the data packet 101. A primary feature of the preferred embodiment of the present invention is that a sampling point is determined for the DSSW, the CDVCC and the ASSW.

The data packet 101 is divided into four regions (A, B, C and D) for symbol recovery, each region (A, B, C and D) is adjacent to one of the three codewords. The symbols in each region (A, B, C and D) are recovered using the sampling point determined from the adjacent codeword. Thus, recovery of the symbols in the data packet 101 may use multiple sampling points rather than only a conventional single sampling point.

Symbol recovery using multiple sampling points is advantageous for receiving long data packets transmitted in a time-varying channel to minimize the received bit error rate. Some types of channel distortion, for example, time dispersion distortion, may cause the timing of the transmitted symbols relative to the timing of the receiver to vary after an initial correlation. Correlating the receiver to codewords associated with corresponding regions in the data packet determines the timing, i.e. the sampling point, of the receiver for recovering the symbols in those regions.

Other types of channel distortion, for example, multipath distortion, may cause poor correlation to one or

more sampling points. However, it is unlikely that poor correlation would result for all the codewords given the duration of the data packet 101. Correlation to multiple codewords to determine multiple sampling points enables the receiver to recover the symbols with one or more sampling points. A receiver 202 employing the present invention may result in improved audio quality, receiver control operation or data reception for the received data packet transmitted in a time-varying channel.

The data packet 101 includes in sequential order: the DSSW having fourteen symbols, a slow associated control channel (SACCH) having six symbols, sixty-five symbols of data, the CDVCC having six symbols, another sixty-five symbols of data, and six symbols reserved (RSV) for future use. Sequentially following the RSV symbols is the ASSW having fourteen symbols residing in the adjacent data packet 102. The DSSW and the ASSW are typically used for synchronization, equalizer retraining and time slot verification of the data packet 101 and the adjacent data packet 102, respectively, as described in the standard per §1.2.4. The DSSW and the ASSW have good autocorrelation properties to facilitate synchronization and training. The CDVCC described in the standard §1.2.5 provides the receiver 202 with channel control information.

Region A includes the six SACCH symbols and twenty-nine data symbols and is adjacent to the DSSW. Region B includes thirty-six data symbols adjacent to the left side of the CDVCC. Region C includes the thirty-six data symbols adjacent to the right side of the CDVCC. Region D includes the six RSV symbols and the twenty-nine data symbols and is adjacent to the ASSW.

The symbols in region A are recovered in a forward direction in time using a first sampling point determined from correlating the receiver 202 to the DSSW. The symbols in

region B are recovered in a reverse direction in time using a second sampling point determined from correlating the receiver 202 to the CDVCC. The symbols in region C are recovered in a forward direction in time using the second sampling point determined from correlating the receiver 202 to the CDVCC. The symbols in region D are recovered in a reverse direction in time using a third sampling point determined from correlating the receiver to the ASSW.

The present invention is not intended to be limited to the specified number of regions or sampling points as described with reference to FIG. 1. Rather, any number of sampling points or regions greater than one may be used to recover the received information. Also, the present invention is not restricted to only data formatted in accordance with the IS-54 digital standard. Rather, the present invention may be applied to any like signal format.

A block diagram of a cellular radiotelephone 200 employing the present invention is shown in FIG. 2. Radio frequency signals within a radio frequency band are coupled to a duplex filter 203 via an antenna 201. The duplex filter 203 separates the receive and transmit band of frequencies such that a signal may be received at the same time another signal is transmitted.

An IF receiving stage 205 comprises a filter that is more selective to generate an IF signal at line 206 having a particular frequency within the received band of radio frequency signals. The IF signal at line 206 is converted from an analog signal to a digital signal in the A/D Converter 207 to generate the data packet 101. The data packet 101 is stored in a data buffer memory location at block 209.

A frame sync signal 213 from a microprocessor 217 synchronizes the receiver 202 to the symbols to approximatly locate the synchronous codewords in time.

A sampling point processor 245 determines the sampling point for recovery of symbols in the data packet 101. The sampled data packet 101 appearing at line 208 is processed by an equalizer 211 along with a recovered coherent carrier signal at line 210 and a reference vector signal from block 237 to remove time dispersion distortion in the data packet 101. An equalized signal is generated by the equalizer 211 at line 212. A typical channel equalizer structure 211 is a decision feedback equalizer (DFE). The DFE tracks the phase of the data packet and cancels the distortion caused by a delayed version of the data packet. DFE's are described in John Proakis, Digital Communications, Chapter 6 (1989).

The data packet 101 in the data buffer 209 is also coupled to a complex correlator 235. The complex correlator 235 detects the synchronous codeword using a complex correlation of the CDVCC, for example, and a corresponding reference vector stored at block 237. The reference vector has the same value as the predetermined value of the CDVCC. The complex correlator generates a plurality of magnitude output signals at line 241 which are stored in a memory location in a magnitude buffer 243. The sampling point processor 245 compares the plurality of magnitude output signals against each other and selects the peak magnitude output signal. The peak magnitude output signal corresponds to the sampling point at the time of the correlation to the CDVCC in the data packet 101. The sampling point is coupled to the data packet 101 in the data buffer 209 for symbol recovery. Another sampling point is also determined for the DSSW and the ASSW for symbol recovery in the regions A, B, C and D of the data packet 101. Thus, multiple sampling points may be used for symbol recovery of the data packet in a time-varying channel.

Once the distortion is cancelled, a point on the eight point constellation representing a recovered symbol at line 216 is generated by a coherent detector 215 by combining the

equalized signal at line 212 and a phase reference signal at line 218 from the complex correlator 235. Coherent detectors are typically used in digital communications for symbol recovery. Coherent detection is described in Bernard Sklar, Digital Communications, Fundamentals and Applications, Chapter 3 (1988).

A microcomputer 217 separates the recovered voice and control symbols. Voice symbols are coupled to a vocoder 219 which decode the voice symbols to produce a digital representation of the voice signal at line 222. The digital voice signal at line 222 is converted to an analog voice signal at line 224 in a D/A Converter 221. The analog voice signal at line 224 is coupled to a speaker 223 providing audible voice. Voice and control information may be transmitted by the digital cellular radiotelephone 200. The IS-54 standard calls out the content of a transmitted plurality of sequential symbols to be different than the content of the received plurality of sequential symbols. An audible voice message coupled to a microphone 227 produces an analog voice signal at line 226 and is converted to a digital voice signal at line 228 in a analog to digital converter 229. The digital voice signal at line 228 is encoded into symbol information by the vocoder 219. The encoded symbol information is formatted into the data packet 101 with any control information from a control unit 225. The control unit 225 may have a keypad and a display (not shown). The control unit information is coupled between the microcomputer 217 and a control unit 225. The formatted data packet 101 at line 230 is converted to an analog signal at line 232 by a digital to analog converter 233. The analog signal 232 is transmitted by the transmitter 231 via the duplex filter 203 for subsequent radiation by the antenna 201.

The equalizer 211, the coherent detector 215, the complex correlator 235 and the sampling point processor 245 are employed in a digital signal processor, such as

DSP56000/56001, provided by Motorola Inc. The use of the DSP56000/56001 is described in DSP56000/56001 Digital Signal Processor User Manual, Revision 1, available from Motorola Inc. The data buffer and the magnitude buffer are memory portions of conventional ready access memory (RAM). The reference vectors at block 237 is stored in conventional read only memory (ROM).

The principles governing the complex correlator are well known in the art. The complex correlator 235 may be in the form of a complex finite impulse response filter (FIR), i.e., it contains four real FIR filters. Correlation is done by treating the in-phase and quadrature-phase components of the symbol as a complex number with the magnitude of the I channel representing the real component and the magnitude of the Q channel representing as the imaginary component.

The portion of the data packet 101 having the synchronous codeword, such as the DSSW, CDVCC or the ASSW, is represented by the following equation:

$$m(kT) = I(kT) + jQ(kT) = a + jb$$

wherein "T" is the symbol time and "k" is a time index as well as a variable of summation. The complex correlation, C, of the input waveform, m(kT), with a reference waveform from block 237, n(kT) = c + jd, is represented by the following equation:

$$C = \Sigma \quad [m(kT)\ n^*(kT)]$$

wherein n* denotes the complex conjugate of n(kT), c - jd.

The complex correlation, C, having the input synchronous codeword represented by a + jb and a complex conjugate represented by c - jd results in a real output of ac + bd and an imaginary output of j(bc-ad).

The magnitude output signal, M, generated at line 241 of the complex correlation 235 is calculated by summing the square of the real output and the square of the imaginary output as follows:

$$M = \sqrt{(ac + bd)^2 + (bc - ad)^2}$$

An example of the complex correlation process is described with FIG.'s 3A and 3B. FIG. 3A shows a portion of the data packet of FIG. 1 having the CDVCC wherein each symbol is sampled eight times (a-h). Using a frame synchronization procedure, the receiver 202 can determine the approximate location of the synchronous codeword, CDVCC for example. The approximate location of the codeword in the data packet is known in the art as a window. The complex correlation is performed over the smallest window possible to minimize correlation processing time. In accordance with the present invention, a four symbol window is used, i.e. four symbols in addition to the number of symbols in the CDVCC. Under other system circumstances, the number of symbols in the window may vary. The four symbol window in FIG. 3A comprises the CDVCC having six symbols 3-8, the data symbols 1 and 2 to the left of symbol 3 and the data symbol 9 and 10 to the right of symbol 8. The CDVCC may appear anywhere within the window. For example, only one symbol may appear at the left of the CDVCC and resulting in three symbols appearing at the right of the CDVCC.

FIG. 3B is a plot of eight magnitude output signals 301-308 at line 241 generated by the complex correlator 235 of FIG. 2. The complex correlation is performed on each sample of the four symbol window shown in FIG. 3A with the corresponding reference vector from block 237.

Each complex correlation produces a magnitude output signal from the complex correlator 235. Correlating the reference vector to the CDVCC over a four symbol window produces thirty two magnitude output signals (eight samples/symbol times a four symbol window). Of the thirty two correlations, one magnitude calculation provides the best information for determining the sampling point for the CDVCC.

For the sake of brevity, only eight magnitude output signals are plotted in FIG. 3B. The magnitude output signals 301-308 correspond to the complex correlation of each symbol of the reference vector with the same sample of each symbol 3-8, respectively, of the CDVCC. For instance, the magnitude output signal 301 is produced by correlating the six symbols of the reference vector to sample "a" of the six symbols 3-8 of the CDVCC, respectively. Similarly, magnitude output signal 305 is produced by correlating the six symbols of the reference vector to sample "e" of the six symbols 3-8 of the CDVCC, respectively.

The magnitude output signals vary in intensity depending on how close the reference vector is correlated to the CDVCC. The best correlation is indicated by a peak magnitude output signal denoted point 305 in FIG. 3B. The peak magnitude output signal corresponds to the optimum sampling point for the CDVCC in the data packet at that particular instant in time. Although the complex correlation described with FIG.'s 3A and 3B involve a particular matching process, other algorithms may be utilized to determine the optimum sampling point.

In the preferred embodiment of the present invention, a peak magnitude output signal corresponding to an optimum sampling point is determined for the

DSSW, the CDVCC and the ASSW. Thus, multiple sampling points are available for recovering all the symbols within corresponding discrete regions at different points in time over the duration of the data packet 101. Depending on the type of distortion in the channel and the signal intensity over the duration of the data packet 101, decisions may be made on which region of the data packet 101 to recover using one of the selected sampling points.

This application is related to the instant assignee's co-pending application having docket no. CE00550R, filed on the same date herewith, invented by Henry L. Kazecki and James C. Baker, entitled "Apparatus and Method for Aadaptively Filtering a Time-Varying Signal Using Multiple Filtering Algorithms". Multiple filtering algorithms may be used in cooperation with symbols recovery using multiple sampling points. For example, the symbols in region A are filtered using two filtering algorithms to reduce the complexity of the equalizer without substantially degrading the received bit error rate performance.

FIG's. 4A and 4B describe the decision process carried out in the DSP/56001 for recovering symbols using multiple sampling points. In general, an optimum sampling point is determined for each synchronous codeword (DSSW, CDVCC and ASSW) and then a decision is made regarding which sampling point to use for recovering the symbols in the various regions based upon the type of distortion present on the channel.

The flow in FIG. 4A begins at block 401 wherein the data packet 101 is received by the antenna 201 shown in FIG. 2. The data packet 101 is stored in the data buffer 209 at block 403 for future processing. The complex correlator 235 correlates the window of the data packet 101 having the desired slot sync word

(DSSW) at block 405. Each sample of the symbols in the window of the data packet are correlated to the symbols of the reference vector. The reference vector has a predetermined value equal to the predetermined value of the DSSW. The complex correlations result in a first set of magnitude output signals.

The first set of magnitude output signals at block 405 are stored in the magnitude output buffer 243 at block 407. The sampling point processor 245 compares the magnitude output signals of the first set to each other and selects the peak magnitude output signal at block 409. The peak magnitude output signal (point 305 of FIG. 3B) corresponds to the optimum sampling point "e" for the DSSW. The peak magnitude output signal corresponding to the optimal sampling point is stored in the sampling point processor's memory at block 411 for later use in recovering symbols in the data packet 101.

In a similar manner, the optimal sampling point for the CDVCC is determined and stored in memory at blocks 413, 415, 417 and 419. Block 429 in FIG. 4A is coupled to block 421 in FIG. 4B via a transition block 435. Likewise, the optimal sampling point for the ASSW is determined and stored in memory at blocks 421, 423, 425 and 427. Thus, the optimal sampling point for the DSSW, the CDVCC and the ASSW have been determined and stored in memory for later use in recovering symbols in the data packet 101. Determining multiple sampling points for symbol recovery of a data packet in a time-varying channel is a unique feature of the present invention.

After the multiple sampling points have been determined, a determination is made as to the type of distortion present in the data packet 101 and thereafter the quality of the multiple sampling points. At block

429, a determination is made if the data packet 101 is in a delay spread channel. U.S patent application having serial no. 07/612656, filed on November 14, 1990, invented by Henry L. Kazecki, Steven H. Goode, Donald W. Dennis, James C. Baker, Kevin L. Baum and Bruce D. Mueller, entitled "Method for Channel Adaptive Detecting/Equalizing" discloses adaptive switching between an equalizer and a coherent detector or detectors to recover data from a received signal. The switching is accomplished dynamically, depending on whether the receiver 202 is in a delay spread distortion environment, as the signal is received. If the data packet 101 is in a delay spread channel, the optimal sampling point for different symbols over the duration of the data packet 101 will vary so a the process continues to block 431. At block 431, the process refers to TABLE 1, a look up table, for further decisions on data recovery using the multiple sampling points.

DSSW	CDVCC	ASSW	DSSW	CDVCC	ASSW
0	0	0	go to block 437 of FIG. 4B		
0	0	1			A,B,C,D
0	1	0		A,B,C,D	
0	1	1		A,B,C	D
1	0	0	A,B,C,D		
1	0	1	A,B		C,D
1	1	0	A	B,C,D	
1	1	1	A	B,C	D

TABLE 1

TABLE 1 generally determines which region (A, B, C or D) of symbols in the data packet 101 to recover with the optimal sampling point corresponding to the DSSW, the CDVCC and

the ASSW. The determination is made based on the quality of the optimal sampling point for each synchronous codeword. If the peak magnitude corresponding to the optimal sampling point for the synchronous codeword is above a predetermined threshold, it is given a binary number one. If the peak magnitude corresponding to the optimal sampling point for the synchronous codeword is below a predetermined threshold, it is given a binary number zero.

For example, if all three peak magnitude signals corresponding to the synchronous codewords are below the predetermined threshold, the flow continues to block 437 of FIG. 4B. If only the peak magnitude corresponding to the ASSW is above the predetermined threshold, all the regions (A, B, C and D) are recovered using the optimal sampling point determined from the ASSW. If the peak magnitude signals corresponding to the DSSW and the CDVCC synchronous codewords are above the predetermined threshold and the peak magnitude signal corresponding to the ASSW synchronous codeword is below the predetermined threshold, the symbols in region A are recovered using the optimal sampling point determined from the DSSW. The symbols in region B, C and D are recovered using the optimal sampling point determined from the CDVCC. All eight cases of optimal sampling point determination for each synchronous codeword are accounted for in order to recover the symbols in each region.

After the optimal sampling point and region for recovery have been determined, the symbols are serially recovered beginning with the first symbol adjacent to the synchronous codeword having a valid optimal sampling point. The symbol adjacent to the DSSW is symbol 105 in the SACCH portion of the data packet 101 in FIG. 1. The symbols adjacent to the CDVCC are symbols 107 and 109 in FIG. 1. The symbol adjacent to the ASSW is symbol 111 in FIG. 1.

The following example describes symbol recovery for all the symbols in the data packet 101 wherein all three optimal sampling points are above the threshold. Recovery begins with symbol 105 in region A in a forward direction in time using the sampling point determined at the DSSW. Symbol recovery continues with the symbol 107 to recover the symbols in region B of the data portion in a reverse direction in time using the sampling point determined at the CDVCC. Symbol recovery continues with symbol 109 to recover the symbols in region C of the data portion in a forward direction in time using the sampling point determined at the CDVCC. The recovery process continues with symbol 111 in the RSV portion then continues into the data portion to recover the symbols in region D in a reverse direction in time using the sampling point determined at the ASSW. Thus, all the symbols in the data packet 101 are recovered using multiple sampling points.

Recovering symbols in a data packet in a forward and reverse direction in time has been disclose in patent application having serial no. 07/633556, filed on December 21, 1990, invented by Henry L. Kazecki and James C. Baker, entitled "Apparatus and Method for Recovering a Time-Varying Signal in a Serial Data System". After recovering the symbols in the data packet the flow continues to block 443 wherein the receiver 202 performs other standard functions such as mobile assisted handoff (MAHO), voice or data determination, and updating the frequency of the automatic frequency control loop.

If a determination is made at block 429 in FIG. 4B that the data packet is not in a delay spread channel, then the flow continues to block 437. At block 437, the peak magnitudes of the complex correlations on the DSSW, the CDVCC and the ASSW are compared. At block 439 the largest peak magnitude resulting from the comparison is selected. At block 441, all the symbols in the data packet 101 are recovered using the

optimum sampling point corresponding to the largest peak magnitude selected. Recovering symbols using this process is useful in channels having flat fading conditions wherein the signal level of each symbol is relatively constant over the duration of the data packet 101. After recovering the symbols in the data packet 101 the flow continues to block 443 wherein the receiver 202 performs other standard functions such as mobile assisted handoff (MAHO), voice or data determination, and updating the frequency of the automatic frequency control loop.

The preferred embodiment of the present invention may be used in the remote signal source 204 acting as a base station for receiving radio signals from the radiotelephone subscriber unit 200. The receives a data packet having the DSSW and the CDVCC. The ASSW is received from another subscriber unit.

Claims

1. A radio frequency receiver for receiving a plurality of sequential symbols transmitted from a remote signal source, the plurality of sequential symbols having at least a first and a second synchronous codeword, each symbol having a plurality of sampling points, a predetermined number of sequential symbols forming a data packet including at least one of the first and the second synchronous codewords, the radio frequency receiver comprising:

means for storing the plurality of sequential symbols;

means for locating the first and the second synchronous codewords among the stored plurality of sequential symbols;

means for determining a first and a second sampling point responsive to said means for locating the first and the second synchronous codewords, respectively; and

means for serially recovering the data packet responsive to at least said first sampling point.

2. The radio frequency receiver in accordance with claim 1 further comprising means for dividing the data packet into a first and a second region, the symbols in said first region of the data packet are recovered responsive to said first sampling point and the symbols in a second region of the data packet are recovered responsive to said second sampling point.

3. The radio frequency receiver in accordance with claim 1 wherein said means for determining further comprises:

means for correlating the first and the second synchronous codewords with a first and a second reference vector, respectively, to produce a first and a second plurality of magnitude signals, respectively;

means for selecting a first peak magnitude, corresponding to said first sampling point, from said first plurality of magnitude signals; and

means for selecting a second peak magnitude, corresponding to said second sampling point, from said second plurality of magnitude signals.

4. The radio frequency receiver in accordance with claim 1 further comprising means for comparing a first and a second peak magnitude, corresponding to said first and said second sampling points, to a predetermined magnitude threshold.

5. The radio frequency receiver in accordance with claim 1 further comprising means for selecting the largest of a first and a second peak magnitude corresponding to said first and said second optimal sampling points.

6. A method for receiving a plurality of sequential symbols transmitted from a remote signal source, the plurality of sequential symbols having at least a first and a second synchronous codeword, each symbol having a plurality of sampling points, a predetermined number of sequential symbols forming a data packet including at least one of the first and the second synchronous codewords, the method comprising the steps of:

storing the plurality of sequential symbols;

locating the first and the second synchronous codewords among the stored plurality of sequential symbols;

determining a first and a second sampling point responsive to said means for locating the first and the second synchronous codewords, respectively; and

serially recovering the data packet responsive to at least said first sampling point.

7. The method for receiving in accordance with claim 6 further comprising the step of dividing the data packet into a first and a second region, the symbols in said first region of the data packet are recovered responsive to said first sampling point and the symbols in a second region of the data packet are recovered responsive to said second sampling point.

8. The method for receiving in accordance with claim 6 wherein said step of determining further comprises the steps of:

correlating the the first and the synchronous codewords with a first and a second reference vector, respectively, to produce a first and a second plurality of magnitude signals, respectively;

selecting a first peak magnitude, corresponding to said first sampling point, from said first plurality of magnitude signals; and

selecting a second peak magnitude, corresponding to said second sampling point, from said second plurality of magnitude signals.

9. The method for receiving in accordance with claim 6 further comprising the step of comparing a first and a second peak magnitude corresponding to said first and said second sampling points to a predetermined magnitude threshold.

10. The method for receiving in accordance with claim 6 further comprising the step of selecting the largest of a first and a second peak magnitude corresponding to said first and said second optimal sampling points.

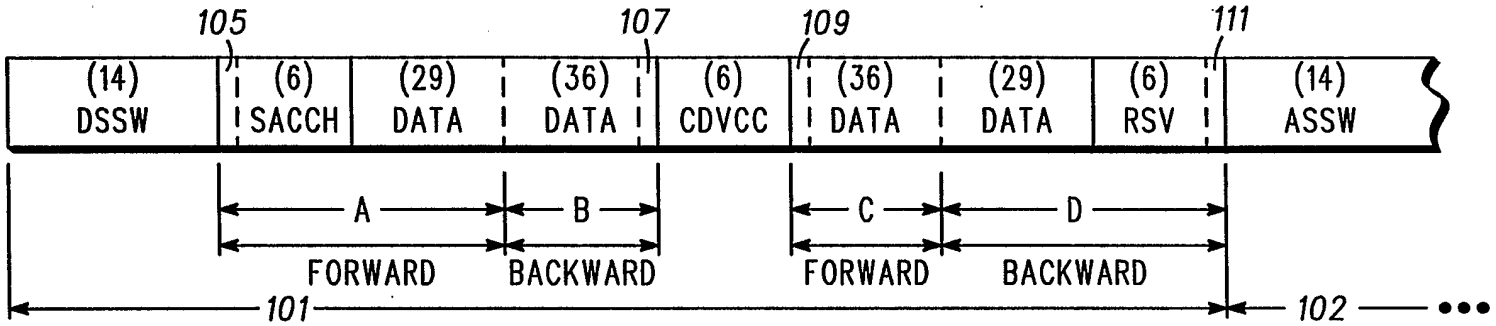

FIG. 1

FIG. 3A

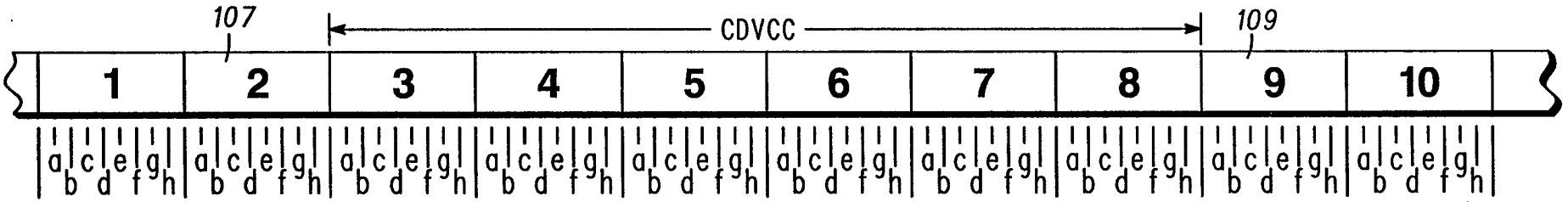

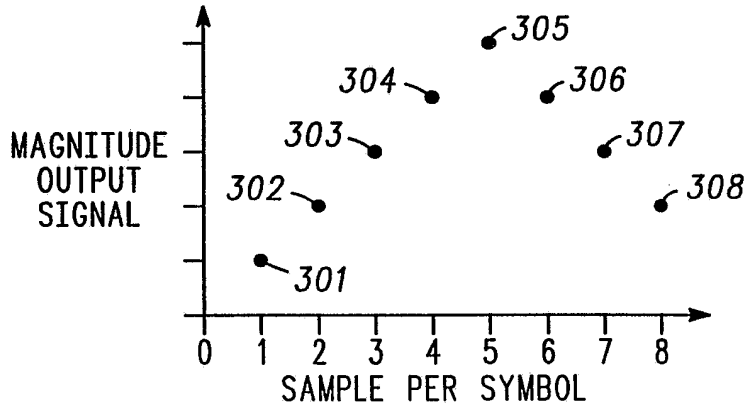

FIG. 3B

PCT/US92/06995

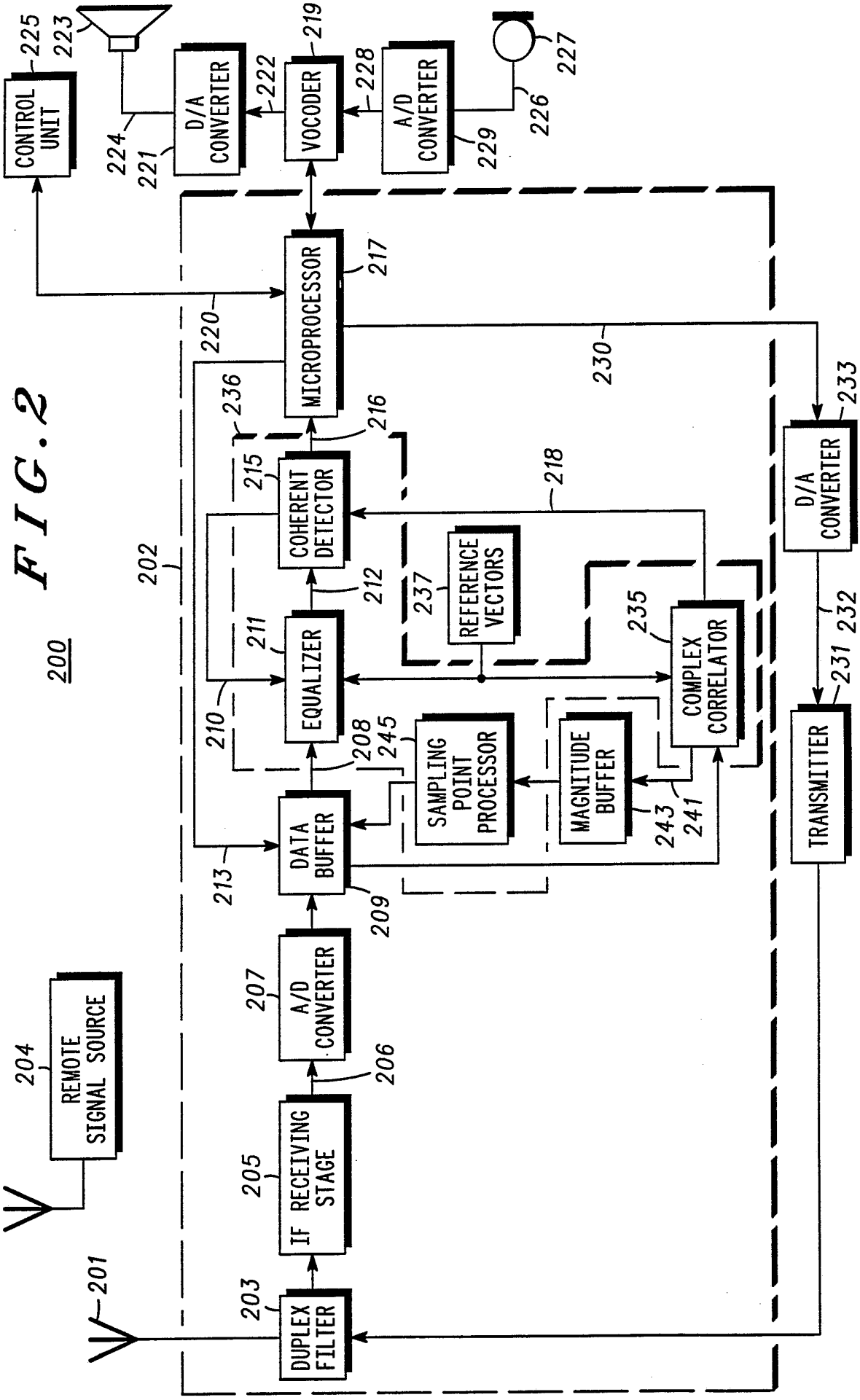
200
201
202
203
DUPLEX FILTER
204
REMOTE SIGNAL SOURCE
205
IF RECEIVING STAGE
206
207
A/D CONVERTER
208
209
DATA BUFFER
210
211
EQUALIZER
212
213
215
COHERENT DETECTOR
216
217
MICROPROCESSOR
218
219
VOCODER
220
221
222
D/A CONVERTER
223
224
225
CONTROL UNIT
226
227
228
A/D CONVERTER
229
230
231
TRANSMITTER
232
233
D/A CONVERTER
235
COMPLEX CORRELATOR
236
237
REFERENCE VECTORS
241
243
MAGNITUDE BUFFER
245
SAMPLING POINT PROCESSOR

FIG. 2

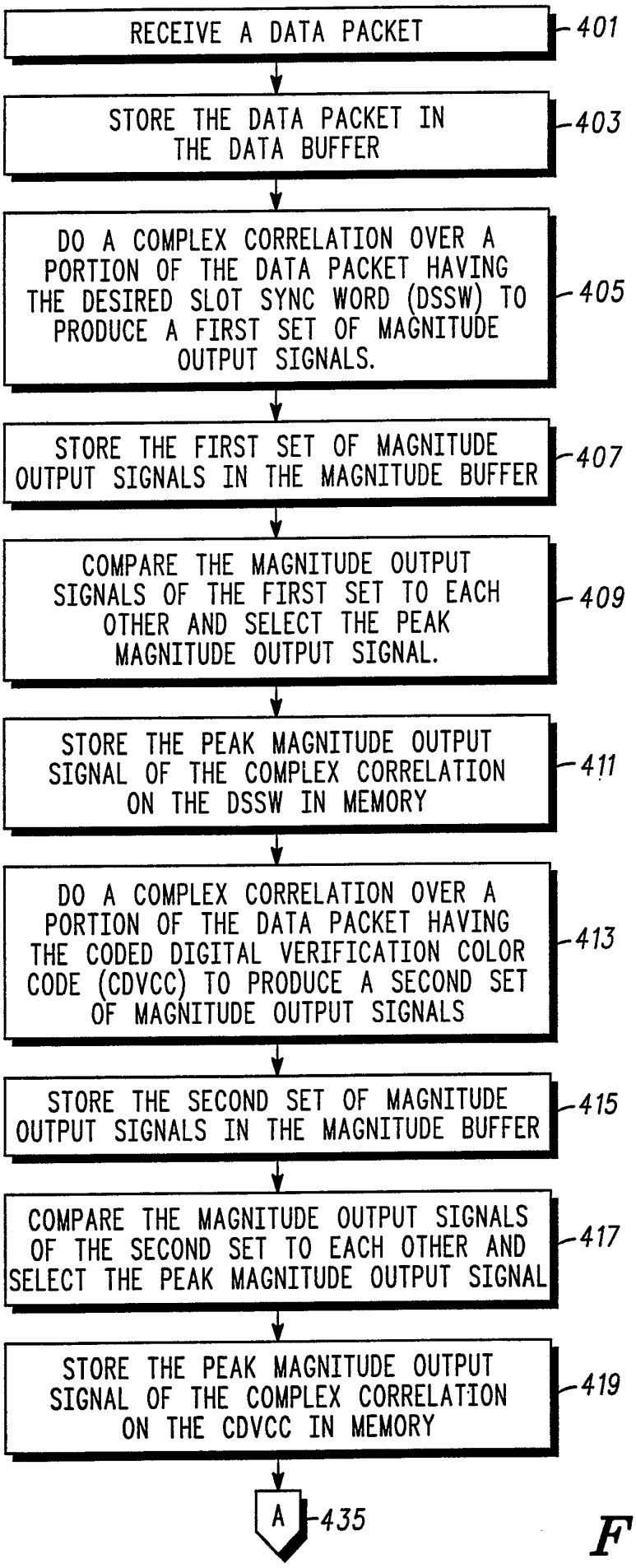
RECEIVE A DATA PACKET
401
STORE THE DATA PACKET IN THE DATA BUFFER
403
DO A COMPLEX CORRELATION OVER A PORTION OF THE DATA PACKET HAVING THE DESIRED SLOT SYNC WORD (DSSW) TO PRODUCE A FIRST SET OF MAGNITUDE OUTPUT SIGNALS.
405
STORE THE FIRST SET OF MAGNITUDE OUTPUT SIGNALS IN THE MAGNITUDE BUFFER
407
COMPARE THE MAGNITUDE OUTPUT SIGNALS OF THE FIRST SET TO EACH OTHER AND SELECT THE PEAK MAGNITUDE OUTPUT SIGNAL.
409
STORE THE PEAK MAGNITUDE OUTPUT SIGNAL OF THE COMPLEX CORRELATION ON THE DSSW IN MEMORY
411
DO A COMPLEX CORRELATION OVER A PORTION OF THE DATA PACKET HAVING THE CODED DIGITAL VERIFICATION COLOR CODE (CDVCC) TO PRODUCE A SECOND SET OF MAGNITUDE OUTPUT SIGNALS
413
STORE THE SECOND SET OF MAGNITUDE OUTPUT SIGNALS IN THE MAGNITUDE BUFFER
415
COMPARE THE MAGNITUDE OUTPUT SIGNALS OF THE SECOND SET TO EACH OTHER AND SELECT THE PEAK MAGNITUDE OUTPUT SIGNAL
417
STORE THE PEAK MAGNITUDE OUTPUT SIGNAL OF THE COMPLEX CORRELATION ON THE CDVCC IN MEMORY
419
A
435

FIG. 4A

FIG.4B

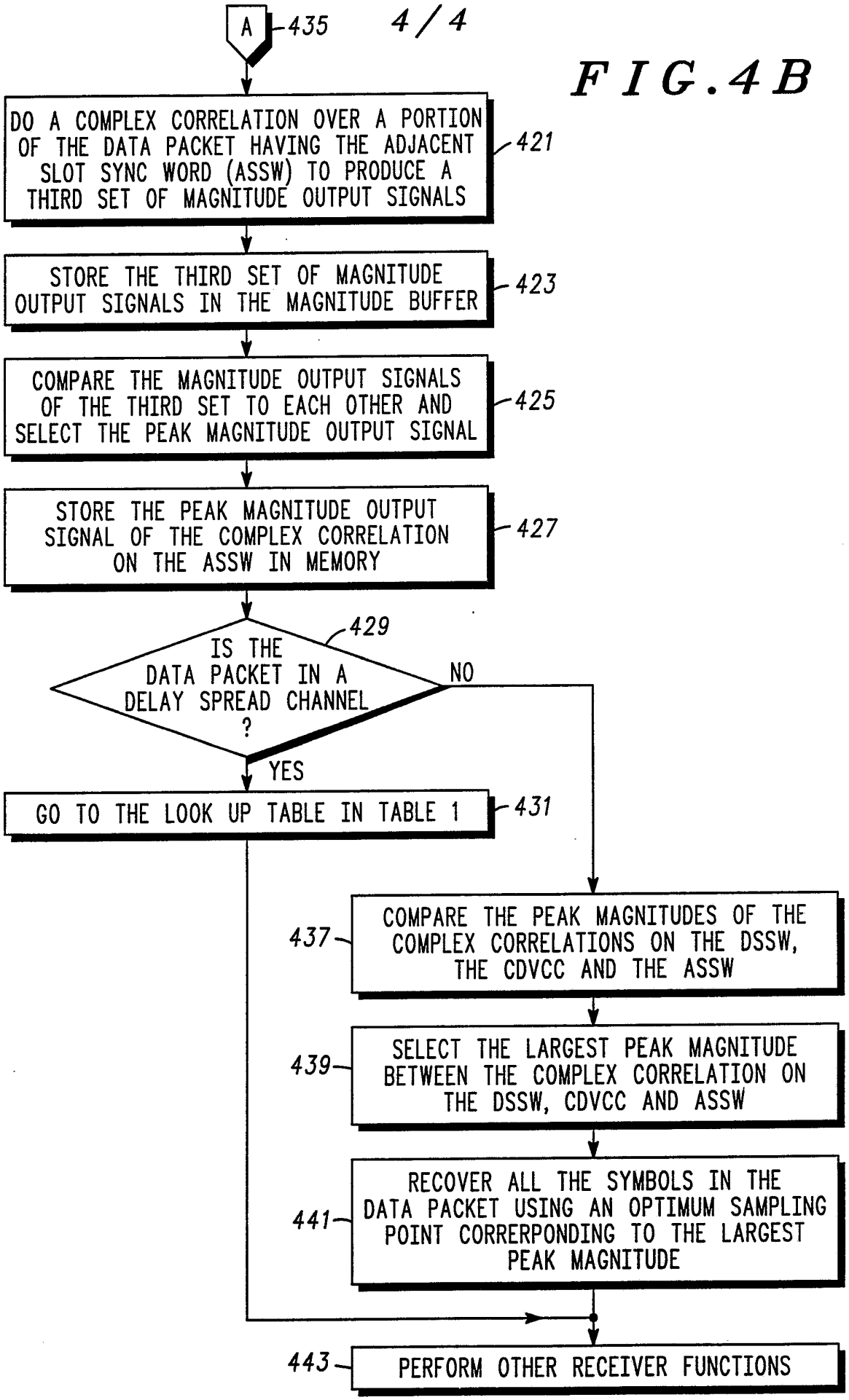
A
435
DO A COMPLEX CORRELATION OVER A PORTION OF THE DATA PACKET HAVING THE ADJACENT SLOT SYNC WORD (ASSW) TO PRODUCE A THIRD SET OF MAGNITUDE OUTPUT SIGNALS
421
STORE THE THIRD SET OF MAGNITUDE OUTPUT SIGNALS IN THE MAGNITUDE BUFFER
423
COMPARE THE MAGNITUDE OUTPUT SIGNALS OF THE THIRD SET TO EACH OTHER AND SELECT THE PEAK MAGNITUDE OUTPUT SIGNAL
425
STORE THE PEAK MAGNITUDE OUTPUT SIGNAL OF THE COMPLEX CORRELATION ON THE ASSW IN MEMORY
427
IS THE DATA PACKET IN A DELAY SPREAD CHANNEL ?
429
NO
YES
GO TO THE LOOK UP TABLE IN TABLE 1
431
COMPARE THE PEAK MAGNITUDES OF THE COMPLEX CORRELATIONS ON THE DSSW, THE CDVCC AND THE ASSW
437
SELECT THE LARGEST PEAK MAGNITUDE BETWEEN THE COMPLEX CORRELATION ON THE DSSW, CDVCC AND ASSW
439
RECOVER ALL THE SYMBOLS IN THE DATA PACKET USING AN OPTIMUM SAMPLING POINT CORRERPONDING TO THE LARGEST PEAK MAGNITUDE
441
PERFORM OTHER RECEIVER FUNCTIONS
443

INTERNATIONAL SEARCH REPORT

International application No.
PCT/US92/06995

A. CLASSIFICATION OF SUBJECT MATTER

IPC(5) :H04J 3/06; H04L 7/00
US CL :370/100.1
According to International Patent Classification (IPC) or to both national classification and IPC

B. FIELDS SEARCHED

Minimum documentation searched (classification system followed by classification symbols)

U.S. : 370/100.1, 106, 94.2; 375/95, 106, 114, 116

Documentation searched other than minimum documentation to the extent that such documents are included in the fields searched

Electronic data base consulted during the international search (name of data base and, where practicable, search terms used)

APS - Search terms: transmitter, receiver, transceiver, synchronization, reference (pattern or code word), sampling point -

C. DOCUMENTS CONSIDERED TO BE RELEVANT

Category*	Citation of document, with indication, where appropriate, of the relevant passages	Relevant to claim No.
Y	US, A, 4,598,413 **(SZECHENYI)**, 01 July 1986, see entire document.	1, 3, 6, 8
Y	US, A, 4,665,533 **(TOMIKAWA)** 12 May 1978, see col. 1, line 46 - col. 2, line 59.	1, 3, 6, 8
A	US, A, 4,794,624 **(BRAUN ET AL.)** 27 December 1988, see entire document.	1-10

☐ Further documents are listed in the continuation of Box C. ☐ See patent family annex.

*	Special categories of cited documents:	"T"	later document published after the international filing date or priority date and not in conflict with the application but cited to understand the principle or theory underlying the invention
"A"	document defining the general state of the art which is not considered to be part of particular relevance	"X"	document of particular relevance; the claimed invention cannot be considered novel or cannot be considered to involve an inventive step when the document is taken alone
"E"	earlier document published on or after the international filing date	"Y"	document of particular relevance; the claimed invention cannot be considered to involve an inventive step when the document is combined with one or more other such documents, such combination being obvious to a person skilled in the art
"L"	document which may throw doubts on priority claim(s) or which is cited to establish the publication date of another citation or other special reason (as specified)	"&"	document member of the same patent family
"O"	document referring to an oral disclosure, use, exhibition or other means		
"P"	document published prior to the international filing date but later than the priority date claimed		

Date of the actual completion of the international search 15 SEPTEMBER 1992	Date of mailing of the international search report 02 DEC 1992
Name and mailing address of the ISA/ US Commissioner of Patents and Trademarks Box PCT Washington, D.C. 20231 Facsimile No. NOT APPLICABLE	Authorized officer for RUSS BLUM NGUYEN NGOC-HO INTERNATIONAL DIVISION Telephone No. (703) 305-4798

Form PCT/ISA/210 (second sheet)(July 1992)★