US 20110033318A1

(19) United States

(12) Patent Application Publication

(10) Pub. No.: US 2011/0033318 A1

(43) Pub. Date: Feb. 10, 2011

Ramirez, JR. et al.

(54) **SINGLE MOTOR MULTIPLE PUMPS**

(76) Inventors: **Emilio A. Ramirez, JR.**, Roselle, IL (US); **Larry Duane Gebhardt**, St. Charles, IL (US)

Correspondence Address:
Bishop & Diehl, Ltd.
1750 East Golf Road, Suite 390
Schaumburg, IL 60173 (US)

(21) Appl. No.: **12/851,128**

(22) Filed: **Aug. 5, 2010**

Related U.S. Application Data

(60) Provisional application No. 61/273,489, filed on Aug. 5, 2009.

Publication Classification

(51) **Int. Cl.**
F04B 17/00 (2006.01)

(52) **U.S. Cl.** **417/321**

(57) **ABSTRACT**

A motorized pump assembly including a motor having a rotatable shaft, at least a first pump having a first impeller and a second pump having a second impeller, wherein the first pump and the second pump are connected to the motor through a rotatable shaft, and wherein the first impeller of the first pump is independently operable from the second impeller of the second pump. The first pump includes a first one-way bearing operatively driven by the rotatable shaft when the rotatable shaft is rotated in a first direction, while the second pump includes a second one-way bearing operatively driven by the rotatable shaft when the rotatable shaft is rotated in a second direction, wherein the second pump and the second one-way bearing are not operatively driven by the rotatable shaft when the rotatable shaft is rotated in the first direction, and wherein the first pump and the first one-way bearing are not operatively driven by the rotatable shaft when the rotatable shaft is rotated in the second direction. A method of dispensing multiple fluids is also described.

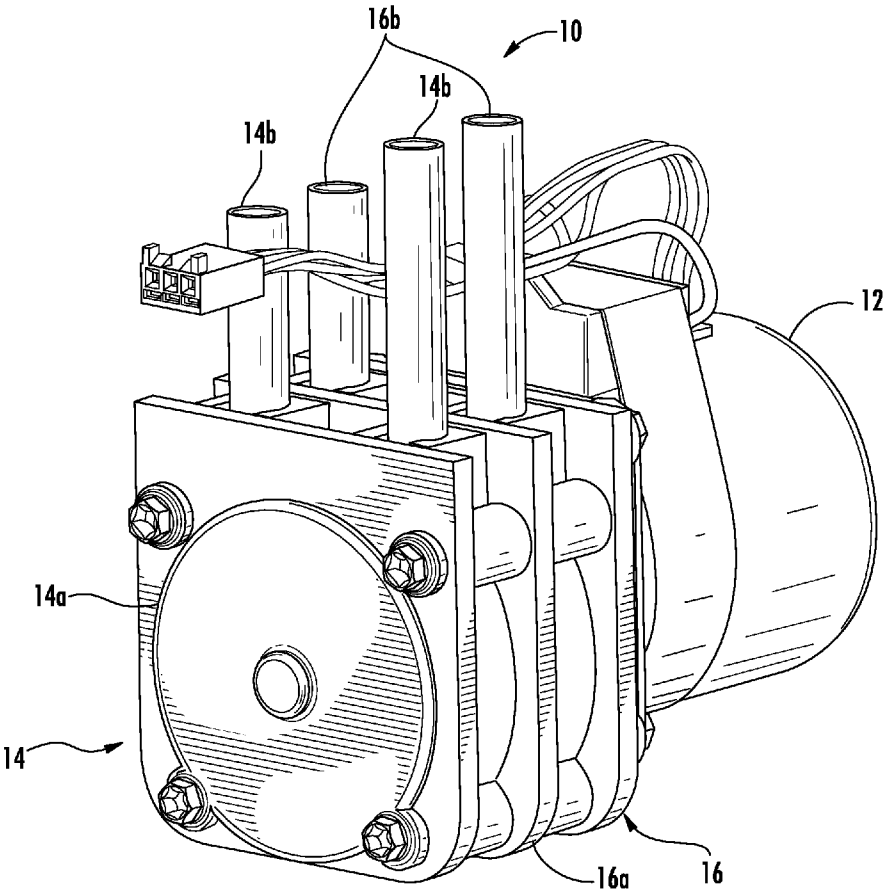

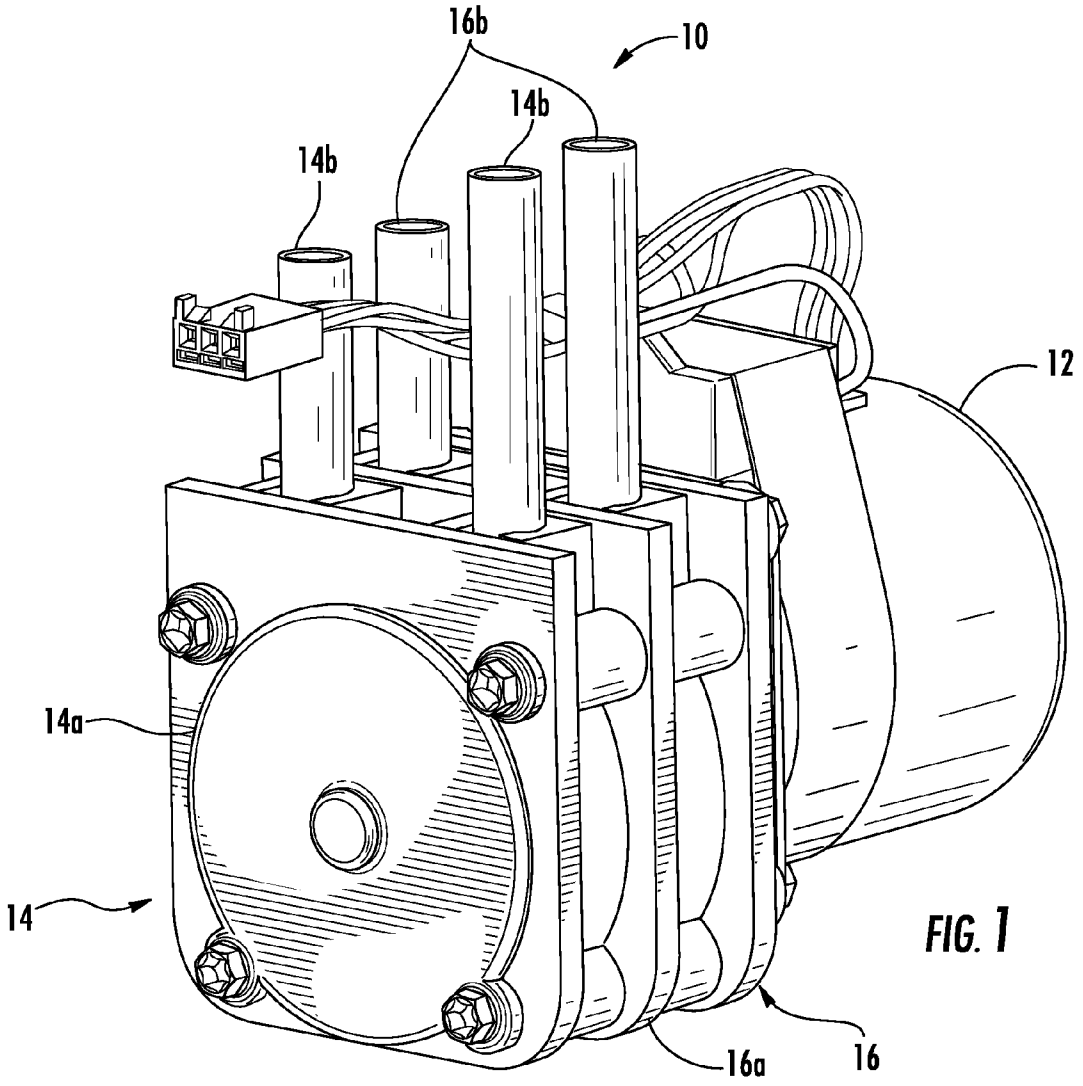

FIG. 1

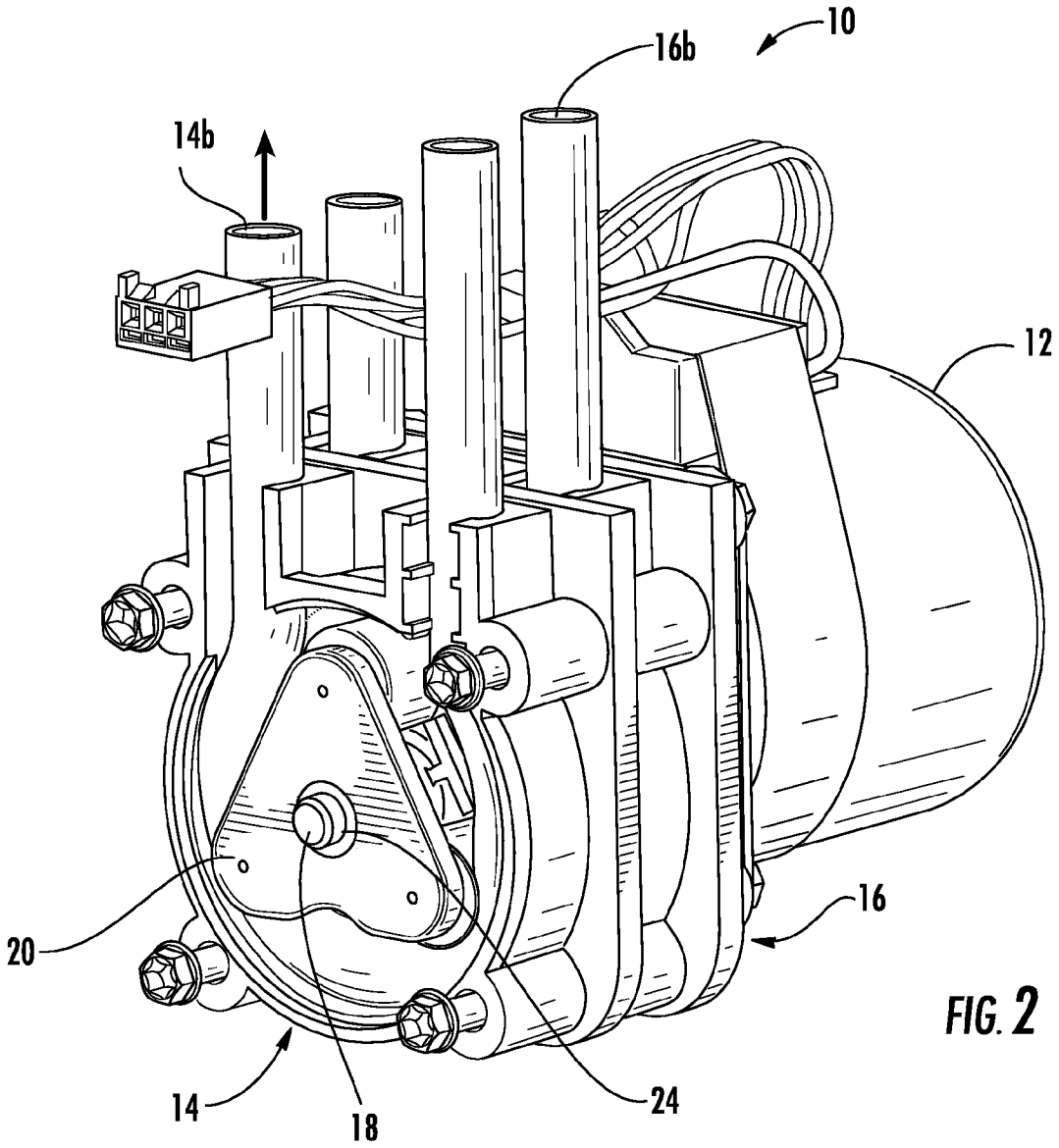

FIG. 2

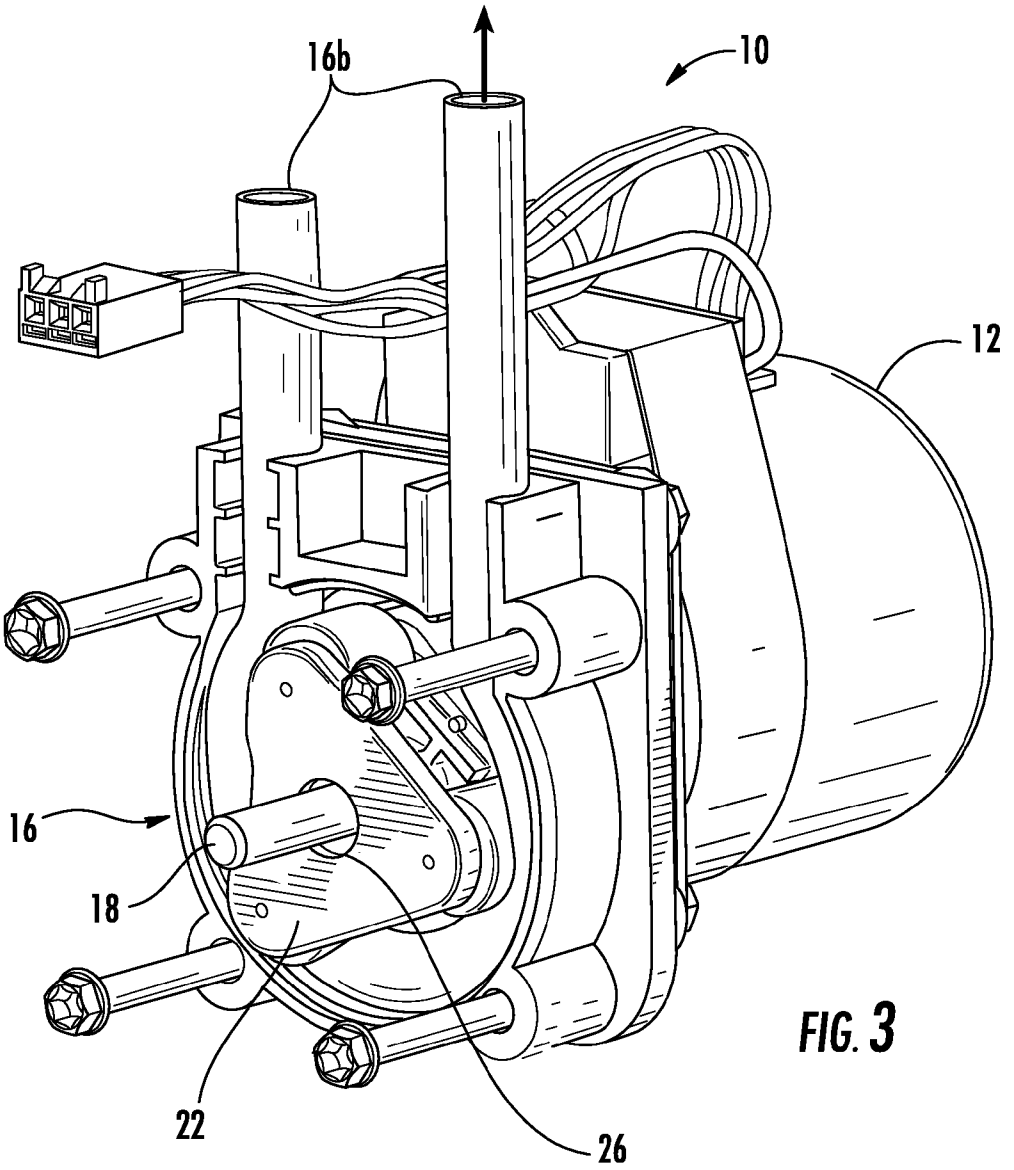

FIG. 3

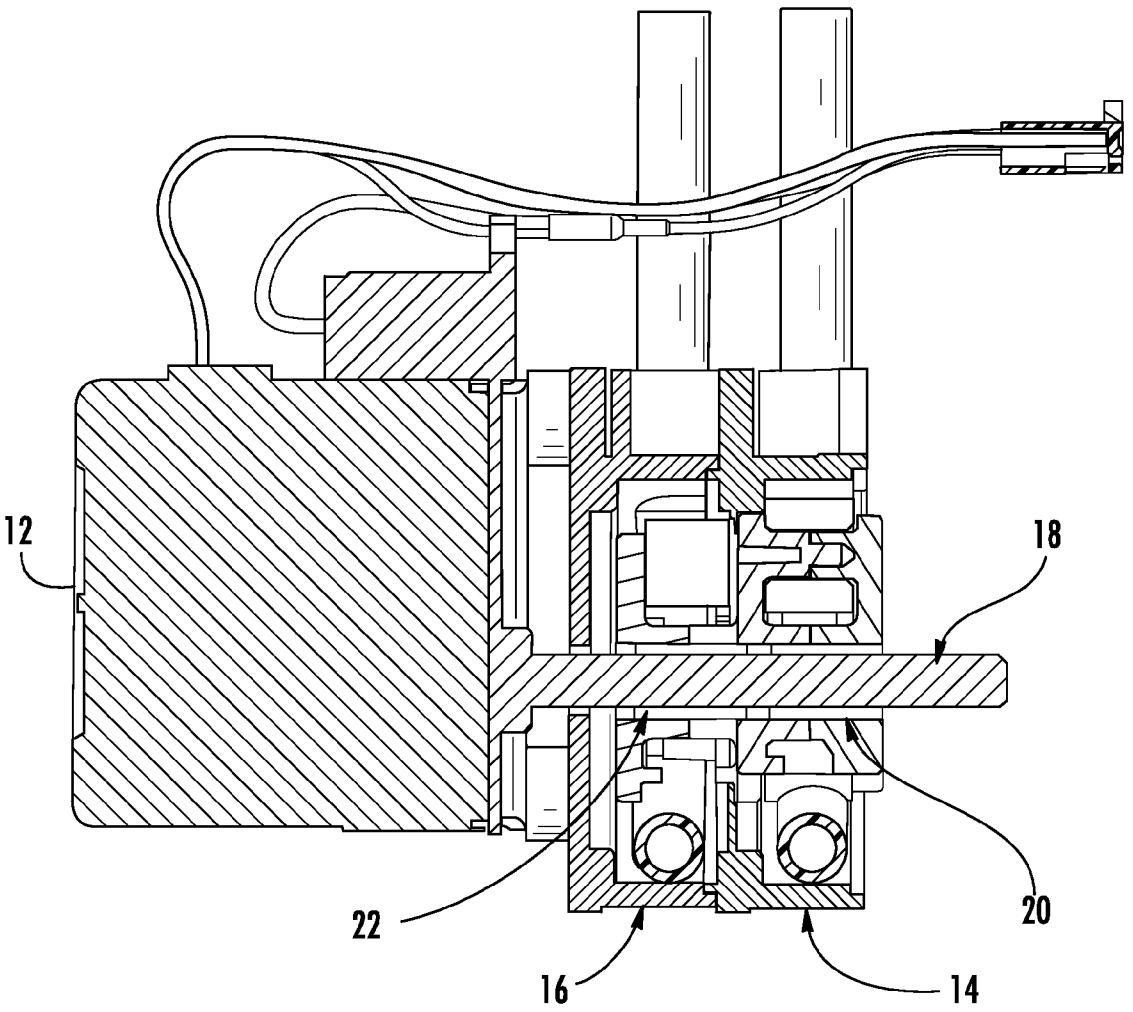

FIG. 4

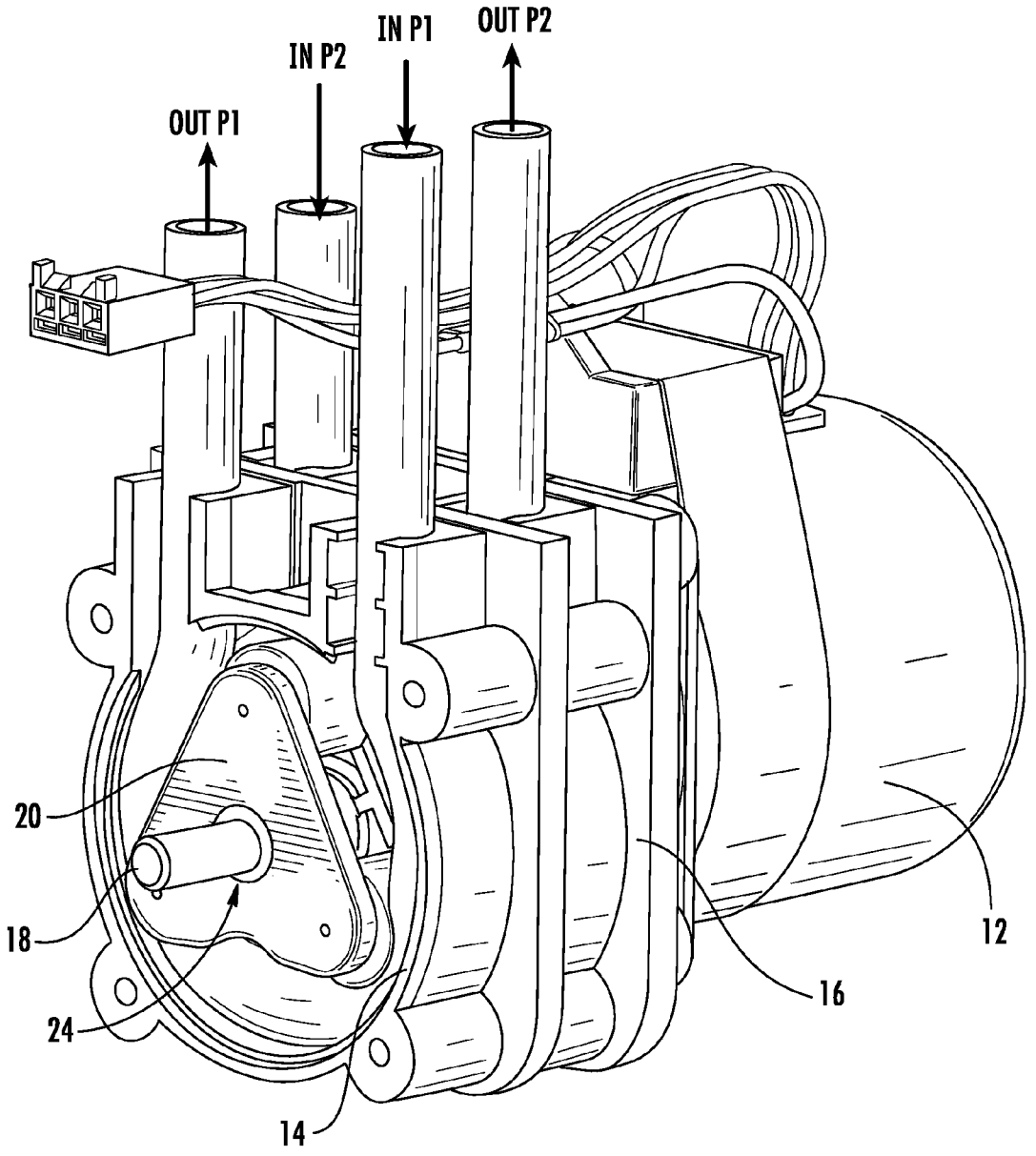

FIG. 5

SINGLE MOTOR MULTIPLE PUMPS

CROSS-REFERENCE TO RELATED APPLICATIONS

[0001] This application claims the benefit of U.S. Patent Application Ser. No. 61/273,489 filed on Aug. 5, 2009.

TECHNICAL FIELD OF THE INVENTION

[0002] The present invention relates to motorized pumps and methods for dispensing fluids. Particularly, the present invention relates to a motorized pump assembly and fluid dispensing method having a single motor operating more than one pump.

BACKGROUND OF THE INVENTION

[0003] Pumps are used in many fluid pump systems and applications. Peristaltic pumps, which function to move fluids through tubes in a pulse-like fashion, are well known. Pumps are very useful in many household appliances, such as washing machines and dishwashers, for providing multiple detergents, softeners and conditioners that are used in these appliances. In addition, because of the use of multiple fluids at different times in the washing cycle, multiple pumps are typically needed to supply each separate fluid. Given the limited interior space in these types of appliances for the internal mechanisms, it would be an advantage, for example, to operate two pumps with a single motor, thereby eliminating the need for two motors to operate two pumps, while maintaining the ability to use multiple fluids in a single pump assembly.

[0004] The assembly and method of the present invention provide the foregoing and other advantages.

SUMMARY OF THE INVENTION

[0005] Generally speaking, the motorized pump assembly includes a single motor that operates at least two pumps. In present assembly, a single motor operates a first pump when the motor rotates its output shaft in a first direction and operates a second pump when the motor rotates its output shaft in a second direction. In this manner, only one of the possible multiple pumps operates at a time. Accordingly, a single motor can be used to selectively and alternatively operate at least two pumps. The single motor dual pumps can be used for any desired application, such as pumping liquids, gels, solids and other materials. The present invention also pertains to related methods, including methods of operating pumps and methods of dispensing substances.

[0006] In one aspect, motorized pump assembly includes a motor having a rotatable shaft, a first pump having a first impeller, a second pump having a second impeller, wherein the first pump and second pump are connected to one another and to the motor through the rotatable shaft, wherein the first impeller of the first pump is independently operable from the second impeller of the second pump.

[0007] In another aspect, the first pump further includes a first one-way bearing rotatable in first direction. In yet another aspect, the second pump further includes a second one-way bearing rotatable in a second direction.

[0008] In another aspect, a motorized pump device includes a motor driving a rotatable shaft, a first pump having a first one-way bearing and operatively driven by the rotatable shaft when the rotatable shaft is rotated in a first direction, a second pump having a second one-way bearing and operatively driven by the rotatable shaft when the rotatable shaft is rotated in a second direction, wherein the second pump and the second one-way bearing are not operatively driven by the rotatable shaft when the rotatable shaft is rotated in the first direction, and wherein the first pump and the first one-way bearing are not operatively driven by the rotatable shaft when the rotatable shaft is rotated in the second direction.

[0009] In yet another aspect, a method of dispensing fluids A method for dispensing multiple fluids comprising the steps of coupling a reversible motor having a rotatable drive shaft to a first fluid pump via a first one-way bearing, coupling the reversible motor having a rotatable drive shaft to a second fluid pump via a second one-way bearing, operating the reversible motor to turn the drive shaft in a first direction to thereby operate the first fluid pump to dispense a first fluid, operating the reversible motor to turn the drive shaft in a second direction to thereby operate the second fluid pump to dispense a second fluid, and wherein the second one-way bearing prevents the second fluid pump from operating to dispense the second fluid when the drive shaft turns in the first direction and the first one-way bearing prevents the first pump from operating to dispense the first fluid when the drive shaft turns in the second direction.

[0010] In yet another aspect of the method, the operation of the motor to turn the rotatable drive shaft alternates between the first direction and the second direction automatically.

[0011] These and other aspects of the invention may be understood more readily from the following description and the appended drawings.

BRIEF DESCRIPTION OF THE DRAWINGS

[0012] For the purpose of facilitating an understanding of the subject matter sought to be protected, there are illustrated in the accompanying drawings embodiments thereof, from an inspection of which, when considered in connection with the following description, the subject matter sought to be protected, its construction and operation, and many of its advantages should be readily understood and appreciated.

[0013] FIG. **1** shows one embodiment of a motorized pump assembly.

[0014] FIG. **2** shows the motorized pump assembly of FIG. **1** with a cover removed from a first pump.

[0015] FIG. **3** shows the motorized pump assembly of FIG. **1** with the first pump removed and a cover removed from the second pump.

[0016] FIG. **4** is a side view of the motorized pump assembly of FIG. **1** with portions of the first and second pumps cut-away.

[0017] FIG. **5** shows the motorized pump assembly and the direction of flow of fluids into the two pumps.

DETAILED DESCRIPTION OF THE INVENTION

[0018] While this invention is susceptible of embodiments in many different forms, there is shown in the drawings and will herein be described in detail a preferred embodiment of the invention with the understanding that the present disclosure is to be considered as an exemplification of the principles of the invention and is not intended to limit the broad aspect of the invention to embodiments illustrated.

[0019] Referring to FIG. **1-5**, there is illustrated a motorized pump assembly **10**, having a motor **12**, and at least two pumps, a first pump **14** and a second pump **16**. The motor **12** drives a rotatable shaft **18**, which drives the pumps. The first

pump **14** has a first impeller **20** and includes a first cover **14***a*. The second pump **16** has a second impeller **22** and includes a second cover **16***a*, the covers being used to enclose the tubing **14***b* and **16***b* running through the first and second pumps, creating separate pump cartridges. The pumps or pump cartridges containing the pumps and tubing for dispensing the fluids can be optionally coupled together in a known manner, such as through bolts or screws. In this manner, multiple pumps or pump cartridges can be joined together, operating together using one motor **12**. The pumps may be any suitable kind, including peristaltic pumps, which move fluids through tubes in a pulse-like fashion and are typically useful in fluid pump systems.

[0020] As shown FIGS. **2** and **3**, each pump includes an impeller, specifically, the first pump **14** includes a first impeller **20**, while the second pump **16** includes a second impeller **22**. In addition, the first impeller **20** includes a first one-way bearing **24**, while the second impeller **22** includes a second one-way bearing **26**. Each bearing **24**, **26**, and thus the impellers are operatively driven by the rotatable shaft **18** when the rotatable shaft is rotated in a first direction or a second direction. The impellers create the pulse or massaging action, which moves the fluid through the tubing.

[0021] In one embodiment, the first one-way bearing **24** can be adapted to rotate in a first direction, for example, in clockwise direction when the first bearing **24** engages the motor shaft **18** when the motor shaft is rotating clockwise. In this manner, the first pump **14** operates when the first one-way bearing **24** engages the clockwise rotating motor shaft **18**. However, the first pump **14** and the first one-way bearing **24** are not operatively driven by the rotatable shaft **18** when the rotatable shaft is rotated in the second direction. When the motor shaft **18** rotates in a second direction, counter-clockwise for example, the first one-way bearing **24** slips on the motor shaft and does not operate the first pump **14**.

[0022] The second pump **16** includes second one-way bearing **26**, which operates in a second direction. Thus, the second one-way bearing **26** can be a counter-clockwise bearing that engages the motor shaft **18** only when the motor shaft is rotating in a counter-clockwise direction. The second pump **16** operates only when the second one-way bearing **26** engages the counter-clockwise rotating motor shaft. The second pump **16** and the second one-way bearing **26** are not operatively driven by the rotatable shaft when the rotatable shaft is rotated in the first direction. When the motor shaft **18** rotates in the first direction or clockwise, the second one-way bearing **26** slips on the motor shaft and does not operate the second pump **16**.

[0023] Accordingly, only one pump is operated at a time by the motor **12** depending on which direction the motor rotates its output motor shaft **18**. Depending on the direction of rotation of the shaft **18**, either the first pump **14** operates to pump fluids, while the second pump **16** is held, or the second pump operates to pump fluids, while the first pump is held. In this manner, the present device may be used to convey more than one fluid into the desired system at independent intervals.

[0024] The direction of the motor rotation can be selected by reversing the polarity of the DC current applied to the electric motor **12**. In addition, it is understood that any type of suitable motor and pumps may be used, and any mix of pumps may be utilized, such as two peristaltic pumps of different capacities or two different sized gear pumps. Also, the speed of each pump may be controlled by an external electrical frequency control unit (not shown).

[0025] As shown in FIG. **5**, when the pump assembly **10** is in operation, the motor **12** rotates in both a clockwise and a counterclockwise direction, wherein the motor operates the two impellers **20** and **22**, each impeller having its own one-way bearings **24**, **26** with a clockwise or counterclockwise rotation. When the motor **12** is rotating clockwise, the first pump **14** is activated, thereby pumping fluid, such as a detergent into the machine system (not shown), while the second pump **16** is slipping and not functioning due to its one-way bearing **26**. When the motor **12** is rotating in a counterclockwise direction, the first pump **14** slips and ceases to function, while the second pump **16** is now activated thereby pumping a second fluid, such as a fabric softener, into the machine system. There is no added torque on the motor **12** as it drives each pump separately, one at a time. In this manner, a single motor can operate numerous pumps in one operation.

[0026] The motorized pump assembly **10** would be useful in a method for dispensing multiple fluids, for example, in a dishwashing machine where detergent and then a rinse aid are used. In one embodiment, the method would include coupling a reversible motor **12** having a rotatable drive shaft **18** to a first fluid pump **14** via a first one-way bearing **24**, and to a second fluid pump **16** via a second one-way bearing **26**. The reversible motor **12** would then turn the drive shaft **18** in a first direction to thereby operate the first fluid pump **14** to dispense a first fluid. Likewise, operating the reversible motor **12** to turn the drive shaft **18** in a second direction would thereby operate the second fluid pump **16** to dispense a second fluid. As previously described, the second one-way bearing **26** prevents the second fluid pump **16** from operating to dispense the second fluid when the drive shaft turns in the first direction, while the first one-way bearing **24** prevents the first pump **14** from operating to dispense the first fluid when the drive shaft **18** turns in the second direction. Accordingly, the method provides operation of at least two pumps, for two separate fluids through the use of a single motor.

[0027] In addition, although the embodiment described has only two pumps driven by a single motor, embodiments of the present invention could have more than two pumps. For example, an embodiment could have more than one clockwise operated pump and/or more than one counter-clockwise operated pump. In addition, multiple pumps could be coupled or to one another or stacked together in a known manner for use in multiple machines requiring the pumping of different fluids.

[0028] The matter set forth in the foregoing description and accompanying drawings is offered by way of illustration only and not as a limitation. While particular embodiments have been shown and described, it will be apparent to those skilled in the art that changes and modifications may be made without departing from the broader aspects of applicants' contribution. The actual scope of the protection sought is intended to be defined in the following claims when viewed in their proper perspective based on the prior art.

What is claimed is:

1. A motorized pump assembly comprising:

a motor having a rotatable shaft;

a first pump having a first impeller;

a second pump having a second impeller, wherein the first pump and second pump are connected to one another and to the motor through the rotatable shaft; and,

wherein the first impeller of the first pump is independently operable from the second impeller of the second pump.

2. The motorized pump assembly of claim **1**, wherein the first pump further includes a first one-way bearing.

3. The motorized pump assembly of claim **2**, wherein the first bearing is rotatable in first direction.

4. The motorized pump assembly of claim **3**, wherein the first bearing is rotatable in a clockwise direction.

5. The motorized pump assembly of claim **1**, wherein the second pump further includes a second one-way bearing.

6. The motorized pump assembly of claim **5**, wherein the second bearing is rotatable in a second direction.

7. The motorized pump assembly of claim **6**, wherein the second bearing is rotatable in counterclockwise direction.

8. A motorized pump device comprising:

a motor driving a rotatable shaft;

a first pump having a first one-way bearing and operatively driven by the rotatable shaft when the rotatable shaft is rotated in a first direction; and

a second pump having a second one-way bearing and operatively driven by the rotatable shaft when the rotatable shaft is rotated in a second direction;

wherein the second pump and the second one-way bearing are not operatively driven by the rotatable shaft when the rotatable shaft is rotated in the first direction; and

wherein the first pump and the first one-way bearing are not operatively driven by the rotatable shaft when the rotatable shaft is rotated in the second direction.

9. The motorized pump device of claim **8**, wherein the first pump further includes a first impeller moveable through the first one-way bearing in the first direction.

10. The motorized pump device of claim **8**, wherein the second pump further includes a second impeller moveable through the second one-way bearing in the second direction.

11. The motorized pump device of claim **8**, wherein the first direction is clockwise.

12. The motorized pump device of claim **8**, wherein the second direction is counterclockwise.

13. A motorized pump assembly comprising:

a motor having a rotatable shaft;

a first pump having a first impeller mounted on a first one-way bearing, the first impeller operatively driven by the rotatable shaft when the rotatable shaft is rotated in a first direction;

a second pump having a second impeller mounted on a second one-way bearing and operatively driven by the rotatable shaft when the rotatable shaft is rotated in a second direction; and,

wherein in the first direction the first pump operates, while the second pump holds, and in the second direction the second pump operates while the first pump holds.

14. A method for dispensing multiple fluids, the method comprising the steps of:

providing a motor having a rotatable shaft;

providing a first pump having a first impeller mounted on a first one-way bearing, the first impeller operatively driven by the rotatable shaft when the rotatable shaft is rotated in a first direction;

providing a second pump having a second impeller mounted on a second one-way bearing and operatively driven by the rotatable shaft when the rotatable shaft is rotated in a second direction;

staying operation of the second pump when the rotatable shaft is rotated in the first direction; and

staying operation of the first pump when the rotatable shaft is rotated in the second direction.

15. A method for dispensing multiple fluids comprising the steps of:

coupling a reversible motor having a rotatable drive shaft to a first fluid pump via a first one-way bearing;

coupling the reversible motor having a rotatable drive shaft to a second fluid pump via a second one-way bearing;

operating the reversible motor to turn the drive shaft in a first direction to thereby operate the first fluid pump to dispense a first fluid;

operating the reversible motor to turn the drive shaft in a second direction to thereby operate the second fluid pump to dispense a second fluid; and

wherein the second one-way bearing prevents the second fluid pump from operating to dispense the second fluid when the drive shaft turns in the first direction and the first one-way bearing prevents the first pump from operating to dispense the first fluid when the drive shaft turns in the second direction.

16. The method of claim **15**, wherein the operation of the motor to turn the rotatable drive shaft alternates between the first direction and the second direction automatically.

17. The method of claim **15**, wherein the first direction is a clockwise direction.

18. The method of claim **15**, wherein the second direction is a counterclockwise direction.

19. A method for automatically dispensing multiple fluids comprising the steps of:

pumping a first fluid via a first pump in response to the operation of a motor turning a rotatable drive shaft in a first direction; and

pumping a second fluid via a second pump in response to the operation of the motor turning the rotatable drive shaft in a second direction.

20. The method of claim **19**, wherein the method further comprises the steps of:

staying operation of the second pump when the rotatable shaft is rotated in the first direction; and,

staying operation of the first pump when the rotatable shaft is rotated in the second direction.

* * * * *