J. GOTHNER.

OIL AND DUST GUARD FOR JOURNAL BOXES.

APPLICATION FILED JAN. 31, 1919.

1,336,428. Patented Apr. 13, 1920.

Fig. 1.

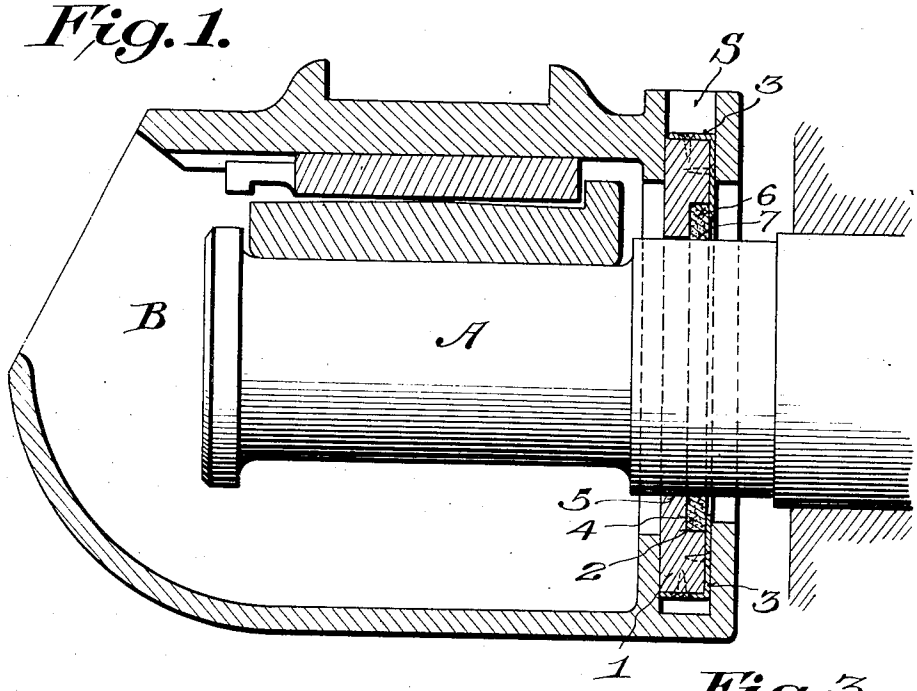

Fig. 3.

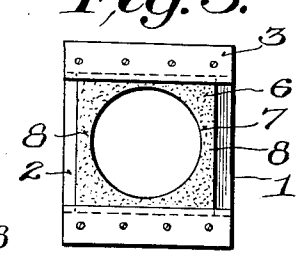

Fig. 2.

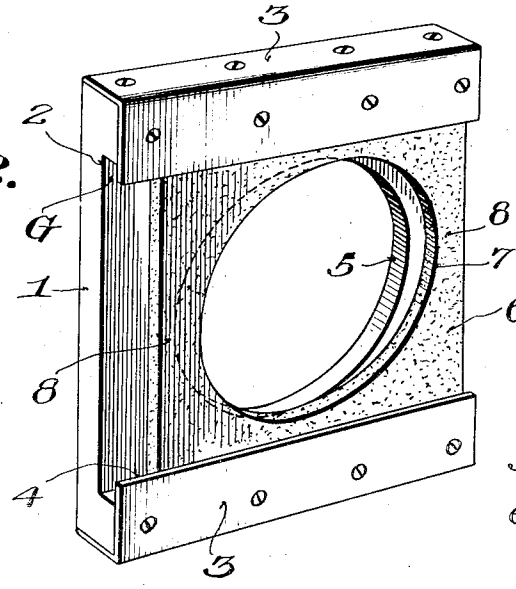

Fig. 4.

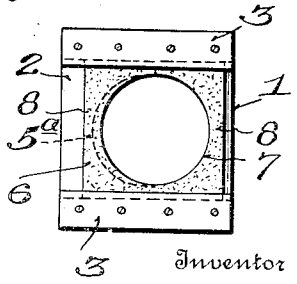

Inventor

Witness

Chas L Grusbauer

John Gothner,

By D W Wolhan Jr

Attorney

UNITED STATES PATENT OFFICE.

JOHN GOTHNER, OF SUPERIOR, WISCONSIN, ASSIGNOR OF ONE-FIFTH TO ERNEST W. COOK, ONE-FIFTH TO WILLIAM R. HALLEM, ONE-FIFTH TO JOHN HANEY, AND ONE-FIFTH TO SOLON L. PERRIN, ALL OF SUPERIOR, WISCONSIN.

OIL AND DUST GUARD FOR JOURNAL-BOXES.

1,336,428. Specification of Letters Patent. Patented Apr. 13, 1920.

Application filed January 31, 1919. Serial No. 274,208.

To all whom it may concern:

Be it known that I, JOHN GOTHNER, a citizen of the United States, residing at Superior, in the county of Douglas and State of Wisconsin, have invented certain new and useful Improvements in Oil and Dust Guards for Journal-Boxes, of which the following is a specification.

This invention relates to an improvement in oil and dust guards, and more especially to a device possessing special utility in connection with journal boxes of railway rolling stock.

The general practice heretofore in vogue for preventing oil and waste from escaping from the journal box, has been to employ a relatively fixed wooden dust guard which simply consists of a piece of wood having a suitable opening to provide clearance for the axle. However, the lateral edges of the opening of this form of guard are subjected to rapid wear due to backward and forward thrust of the journal axle, resulting in the enlargement of the opening in the guard, particularly at the sides thereof, whereby not only waste and oil may escape but dirt and dust admitted. Various means and devices have been proposed for remedying this defect, but the same have usually been more or less complicated and in many instances involve springs and other expensive and undesirable mechanical parts which are not only liable to malfunction, but also cause undue excessive wear on the axle.

Accordingly the present invention has primarily in view a novel dust and oil guard unit which preserves all of the desirable features and characteristics of the widely used wooden block, but at the same time provides means for compensating the wear incident to varying conditions of use.

A further and more specific object of the invention is to provide a novel and practical structure which is practically indestructible, owing to the fact that the relatively movable part of the unit is subjected to practically none of the wearing or grinding effects of the axle, due to its being mounted so as to readily follow the movement thereof due to the application of the brakes, and overcoming the inertia of train load in starting.

Another object of the invention is to provide a unit which is inexpensive, practical and thoroughly reliable for the purpose of retaining oil and excluding foreign matter from the journal box.

With the above and other objects in view which will more readily appear as the nature of the invention is better understood, the same consists in the novel construction, combination and arrangement of parts hereinafter more fully illustrated, described and claimed.

A preferred and practical embodiment of the invention is shown in the accompanying drawings, in which:—

Figure 1 is a vertical sectional view of a journal box showing the application of the invention.

Fig. 2 is a perspective view of the oil and dust proof guard unit.

Fig. 3 is a diagrammatic plan view showing the original initial relation of parts.

Fig. 4 is a view similar to Fig. 3 showing how the follower guard plate may shift with the movement of the axle to cover the opening in the wear body.

Similar reference characters designate corresponding parts throughout the several figures of the drawing.

As previously pointed out, the means generally employed for excluding oil and dust from a journal box is a piece of wood having a suitable axle clearance opening therein which is adapted to be inserted in the guard receiving slot of the journal box. Owing to the limitations in the size of the box this wooden dust guard has a snug lateral fit in the slot, but may have more or less vertical play therein to compensate for the movement of the axle due to conditions of load and vertical thrusts or shocks imparted from the rolling stock. However, the strains imposed on the lateral sides of the wooden dust guard by the axle, due to the application of the brakes, and the inertia of starting, rapidly wears out such sides of the wooden guard so that in a short time an elliptical opening is formed with its long diameter disposed horizontally, or in the direction of the imposition of axle pressure due to the conditions above mentioned. Obviously this opening affords an entrance for dust and foreign matter and also permits oil to escape on to the tread of the wheel, etc., which is undesirable since it interferes with the efficiency of the brake shoes.

The present invention proposes to eliminate the foregoing objections by providing a novel unit consisting of a relatively fixed wear body and a relatively horizontally shiftable follower guard plate which cooperates therewith to cover up or close the worn opposite edges of the axle clearance opening in the wooden wear body. By reference to the drawings it will be observed that the wooden wear body is designated generally as 1 and is preferably made of the conventional dimensions in order to fit within the dust guard receiving slot S of the journal box B which is intended to receive the journal box of the axle A in the well known manner. This wooden wear body is preferably recessed on one side as indicated at 2 and has fitted to the top and bottom edges thereof suitable metallic or equivalent guide strips 3—3 whose edges 4 coöperate with the sides of the recess 2 to provide a horizontal guide-way G. In addition to providing the guide-way G these guide strips 3 constitute an effective reinforcement for the body 1 and also prevent the same from warping or splitting as is frequently the case with the ordinary wooden dust guard.

The said wear body 1 is formed with a central axle clearance opening 5 which originally has a reasonably snug fit on the axle, and if it were not for the lateral thrusts imposed on the sides of this opening it might satisfactorily perform its functions. However, owing to the effect of these thrusts, as previously pointed out, the sides of this opening become worn as indicated by the dotted line 5^a in Fig. 4, and to take care of this wear the present invention proposes to mount in the guides G formed by the strips 3—3, a horizontally shiftable follower guard plate 6 having an opening 7 for closely fitting the journal end of the axle. This follower guard plate is preferably made of hard fiber or its equivalent which insures maximum efficiency and length of use, and owing to its being slidably mounted in the guide-way of the wear body, freely follows any lateral movement of the journal end of the axle within the journal box. This free and unrestricted lateral movement of the follower guard plate 6 therefore causes the same to always close or cover the worn-away part at the sides of the opening 5 as shown in Fig. 4. That is to say, the lateral skirt portions 8 of the fiber follower guard plate constitute a cover or seal for the worn-away edges of the axle clearance opening in the wear body plate in all horizontal movements of the axle, and thus prevent the escape of oil and entrance of foreign matter into the journal box. Owing to the fact that the follower guard plate 6 has a free lateral movement with the axle, obviously no strain is imposed thereon and therefore there is no tendency for the opening 7 to wear larger or into the form of an ellipse. And, owing to the fact that the entire unit has a fair amount of vertical play in the ordinary guard receiving slot of the journal box, the upper and lower sides of the opening 7 will not be subjected any where due to vertical loads or road bed thrusts.

From the foregoing it is believed that the many features and advantages of the present oil and dust proof guard unit will be readily apparent, but it is desired to emphasize the fact that the present invention provides a unit which may be readily handled and inserted in the ordinary journal box without changing its structure in any way, and which preserves all of the advantages of a wooden dust guard with the added desirable advantage of rendering the same practically indestructible, which is of course a great factor in the up-keep of this portion of railway rolling stock.

I claim:

1. A dust guard unit for journal boxes including a wear body having an axle clearance opening, combined reinforcing and guideway forming means carried by opposite sides of the body, and a follower guard plate also having an axle clearance opening and held in sliding relation to the wear body by said combined reinforcing and guideway forming means.

2. A dust guard unit for journal boxes including a wooden wear body having a horizontal guide-way and a central axle clearance opening, and a fiber follower guard plate having a central axle clearance opening adapted to register with the similar opening in the wear body and mounted in said horizontal guide-way for lateral movement, said follower guard plate having opposite skirt portions for coöperating with the opposite sides of the opening in the wear body when the same becomes worn.

3. A dust guard unit for journal boxes including a wooden wear body having an axle clearance opening, metallic reinforcing means at the top and bottom of said body and coöperating therewith to provide a guideway, and an axle embracing follower guard plate mounted in said guide-way and movable independently of the wear body.

4. A dust guard unit for journal boxes including a wear body having a central axle clearance opening and also recessed on one face thereof, reinforcing strips secured to the top and bottom edges of the wear body and having one of their edge portions cooperating with the side walls of the recessed portions of the wear body to provide opposite guide-ways, and a fiber follower guard plate having a central axle clearance opening and slidably mounted in said guide-ways.

5. A dust guard unit for journal boxes

including a wooden wear body having a central axle clearance opening initially of the same diameter as the axle and having one face thereof recessed, angular reinforcing strips secured to the top and bottom edges of the wear body and having the vertical wings thereof coöperating with the sides of the recess in the wear body to provide opposite retaining guide-ways and a fiber follower guard plate also having a central axle receiving opening of the same diameter as the axle, said guard plate being slidably mounted in the guide-ways and held in place by the edges of the angular reinforcing strips.

6. A dust guard unit for journal boxes including a wear body having an axle clearance opening initially of the same diameter as the axle, said plate adapted to occupy a relatively fixed position against horizontal movement in the journal box, follower guides, and a single horizontally slidable follower guard plate coöperating with said follower guides and provided with an axle clearance opening adapted to be permanently of the same diameter as the axle and compensate for subsequent wear of the axle receiving opening of the wear body.

In testimony whereof I hereunto affix my signature in the presence of two witnesses.

JOHN GOTHNER.

Witnesses:
ELLEN C. PETERSON,
CANA M. COLON.