(12) INTERNATIONAL APPLICATION PUBLISHED UNDER THE PATENT COOPERATION TREATY (PCT)

(19) World Intellectual Property Organization
International Bureau

(43) International Publication Date
25 November 2004 (25.11.2004)

PCT

(10) International Publication Number
WO 2004/100725 A2

(51) International Patent Classification[7]: A47D

(21) International Application Number:
PCT/US2004/014214

(22) International Filing Date: 7 May 2004 (07.05.2004)

(25) Filing Language: English

(26) Publication Language: English

(30) Priority Data:
10/435,097 9 May 2003 (09.05.2003) US

(71) Applicant *(for all designated States except US)*: **DISNEY ENTERPRISES, INC.** [US/US]; 500 South Buena Vista Street, Burbank, California 91521 (US).

(72) Inventor; and

(75) Inventor/Applicant *(for US only)*: **DIEBEL, Anne, M.** [US/US]; 113 Polhemustown Road, Allentown, NJ 08501 (US).

(74) Agents: **GREENBERG TRAURIG, LLP** et al.; 2450 Colorado Avenue, Suite 400 E, Santa Monica, California 90404 (US).

(81) Designated States *(unless otherwise indicated, for every kind of national protection available)*: AE, AG, AL, AM, AT, AU, AZ, BA, BB, BG, BR, BW, BY, BZ, CA, CH, CN, CO, CR, CU, CZ, DE, DK, DM, DZ, EC, EE, EG, ES, FI, GB, GD, GE, GH, GM, HR, HU, ID, IL, IN, IS, JP, KE, KG, KP, KR, KZ, LC, LK, LR, LS, LT, LU, LV, MA, MD, MG, MK, MN, MW, MX, MZ, NA, NI, NO, NZ, OM, PG, PH, PL, PT, RO, RU, SC, SD, SE, SG, SK, SL, SY, TJ, TM, TN, TR, TT, TZ, UA, UG, US, UZ, VC, VN, YU, ZA, ZM, ZW.

(84) Designated States *(unless otherwise indicated, for every kind of regional protection available)*: ARIPO (BW, GH, GM, KE, LS, MW, MZ, NA, SD, SL, SZ, TZ, UG, ZM, ZW), Eurasian (AM, AZ, BY, KG, KZ, MD, RU, TJ, TM), European (AT, BE, BG, CH, CY, CZ, DE, DK, EE, ES, FI, FR, GB, GR, HU, IE, IT, LU, MC, NL, PL, PT, RO, SE, SI, SK, TR), OAPI (BF, BJ, CF, CG, CI, CM, GA, GN, GQ, GW, ML, MR, NE, SN, TD, TG).

Declarations under Rule 4.17:

— *as to applicant's entitlement to apply for and be granted a patent (Rule 4.17(ii)) for the following designations AE, AG, AL, AM, AT, AU, AZ, BA, BB, BG, BR, BW, BY, BZ, CA, CH, CN, CO, CR, CU, CZ, DE, DK, DM, DZ, EC, EE, EG, ES, FI, GB, GD, GE, GH, GM, HR, HU, ID, IL, IN, IS, JP, KE, KG, KP, KR, KZ, LC, LK, LR, LS, LT, LU, LV, MA,*

[Continued on next page]

(54) Title: AN ENCLOSURE FOR A CHILD

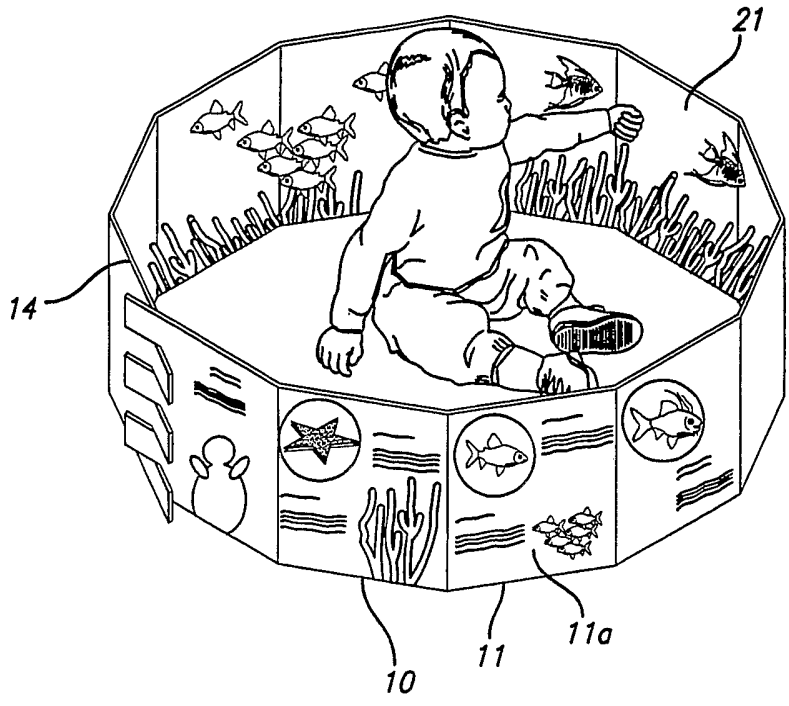

(57) Abstract: A combination book and enclosure has a series of panels, at least one of the panels having a printed feature. The panels are in end to end relationship around a hinge line so as to be foldable in a fan-like mode and the first panel and the last panel in the series having respectively free-ends. The free end of the first panel and the fee end of the last panel are connectable together when the panels are opened and extended such that the free ends can be brought into contact. A connection feature of the free end of the first panel are for mating engagement with the a complementary mating connection feature on the free end of the last panel. The panels in a first mode are readable sequentially as a book when successive panels are sequentially turned about the hinge line between the panels. The panels in a second mode are extendible from the front panel to the last panel and the respective connection features are brought into mating engagement thereby to form an enclosure.

WO 2004/100725 A2

MD, MG, MK, MN, MW, MX, MZ, NA, NI, NO, NZ, OM, PG, PH, PL, PT, RO, RU, SC, SD, SE, SG, SK, SL, SY, TJ, TM, TN, TR, TT, TZ, UA, UG, UZ, VC, VN, YU, ZA, ZM, ZW, ARIPO patent (BW, GH, GM, KE, LS, MW, MZ, NA, SD, SL, SZ, TZ, UG, ZM, ZW), Eurasian patent (AM, AZ, BY, KG, KZ, MD, RU, TJ, TM), European patent (AT, BE, BG, CH, CY, CZ, DE, DK, EE, ES, FI, FR, GB, GR, HU, IE, IT, LU, MC, NL, PL, PT, RO, SE, SI, SK, TR), OAPI patent (BF, BJ, CF, CG, CI, CM, GA, GN, GQ, GW, ML, MR, NE, SN, TD, TG)

— *of inventorship (Rule 4.17(iv)) for US only*

Published:

— *without international search report and to be republished upon receipt of that report*

For two-letter codes and other abbreviations, refer to the "Guidance Notes on Codes and Abbreviations" appearing at the beginning of each regular issue of the PCT Gazette.

AN ENCLOSURE FOR A CHILD

BY

ANNE DIEBEL

BACKGROUND OF THE DISCLOSURE

FIELD OF THE DISCLOSURE

[0001] The present disclosure relates to a children's or baby's book and a child or baby enclosure.

RELATED ART

[0002] Baby books and baby enclosures are well known in the art, each having its advantages.

[0003] For example, a foldable enclosure is disclosed in U.S. Pat. No. 5,265,848 to Michaud. In Michaud, a plurality of substantially rectangular panels are connected in an accordion-like manner either in an erected orientation forming a closed play space or in a compact collapsed orientation for transportation and storage. In order to allow the compact collapsed orientation to be obtained, a front closure panel is specially shaped to partially overlie over an adjacent panel and allow the enclosure to be secured by means of cooperating snap fasteners to be disposed on the front closure panel and the adjacent panel. In particular, the collapsed condition is obtained by pressing the front closure panel on the adjacent panel. Also a handle is provided, to allow transportation of the enclosure during the collapsed condition of the enclosure.

[0004] However, Michaud's enclosure is not intended to and cannot be used as a book during the collapsed condition, because the particular securing means adopted and the presence of the handle are to allow and emphasize transportability of the enclosure in the collapsed, thus rendering relative movement of one or more of the panels with respect to the other panels practically impossible during such condition.

[0005] Furthermore, a foldable children's book is disclosed in UK Pat. App. GB 2,248,582 to Gomboli. In particular, Gomboli's book can be converted into a three-dimensional body having the shape of a cube.

[0006] However, Gomboli's book is not intended to and cannot be used as an enclosure for a child because the cube is a closed object, used to attract a child its external appearance.

[0007] Therefore, there is a need to overcome the disadvantages of Michaud and Gomboli in order to provide a combination book and enclosure.

SUMMARY OF THE DISCLOSURE

[0008] The above need is overcome by the present disclosure.

[0009] According to a first aspect, a combination book and enclosure is disclosed. The combination comprises a series of panels having a first panel and a last panel, at least one of the panels having a printed feature. In the series of panels each two adjacent panels are in end to end relationship around a hinge line so as to be foldable in a fan-like mode, the first panel having a first panel free end and the last panel having a last panel free end.

[0010] In the combination comprising the series of panel, the first panel free end and the last panel free end are connectable together when the panels are opened and extended such that the first panel free end and the last panel free end can be brought into contact. In the combination comprising the series of panel, a first panel connection feature on the first panel free end is for mating engagement with a complementary last panel connection feature on the last panel free end.

[0011] In the combination comprising the series of panel, the panels in a first mode are readable sequentially as a book when successive panels are sequentially turned about hinge lines between the panels; and the panels, in a second mode, are extendible from the first panel to the last panel and the first panel connection feature and the last panel connection feature are brought into mating engagement thereby to form an enclosure suitable to enclose a child.

[0012] According to a second aspect, a combination book and enclosure is disclosed. The combination comprises a series of panels having a first panel and a last panel, at least some of the panels having printed features. In the combination comprising the series of panel, each two adjacent panels are in end to end

relationship around a hinge line so as to be foldable in a fan-like mode, the first panel having a first panel free end and the last panel having a last panel free end.

[0013] In the combination comprising the series of panels, the first panel free end and the last panel free end are connectable together when the panels are opened and extended such that the first panel free end and the last panel free end can be brought into contact.

[0014] In the combination comprising the series of panels, a first panel connection feature on the first panel free end is for mating engagement with a complementary last panel connection feature on the last panel free end.

[0015] In the combination comprising the series of panels, the panels in a first mode are readable sequentially as a book when successive panels are sequentially turned about hinge lines between the panels, all of the hinge lines between the panels of the series of panels being substantially in a same direction.

[0016] In the combination comprising the series of panels, the panels in a second mode are extendible from the first panel to the last panel and the first panel connection feature and the last panel connection feature are brought into mating engagement thereby to form an enclosure.

[0017] In the combination comprising the series of panels, each panel has a front face, a reverse face, and a printed feature, which is self contained on the front face.

[0018] In the combination comprising the series of panels, printed features on reverse faces of at least two adjacent panels form a thematically overlapping printing feature.

[0019] In the combination comprising the series of panel, the first panel connection feature and the last panel connection feature are mating jigsaw cut out shapes in the first panel free end and the last panel free end.

[0020] According to a third aspect a collapsible enclosure is disclosed. The collapsible enclosure comprises a series of panels having a first panel and a second panel, the second panel adjacent to the first panel, at least some of the panels having decorative features. In the collapsible enclosure comprising the series of

panel, the first panel has a first panel free end and the second panel has a second panel free end.

[0021] In the collapsible enclosure comprising the series of panels, the panels are locatable in end to end relationship, the first panel free end and the second panel free end connectable together when the first panel and the second panel are placed in a relative extended relationship such that the first panel free end and the second panel free end can be brought into contact.

[0022] In the collapsible enclosure comprising the series of panels, a first panel connection feature on the first panel free end is for mating engagement with a complementary second panel connection feature on the second panel free end, the enclosure being a substantially circular enclosure formed when the first panel free end is brought into mating engagement with the second panel free end.

[0023] In the collapsible enclosure comprising the series of panels, the first panel connection feature and the second panel connection feature are mating jigsaw cut out shapes in the first panel free end and the second panel free end.

[0024] According to a fourth aspect a device suitable to be used by a child, is disclosed. The device comprises a plurality of panels including a first panel and a last panel, each panel separated from an adjacent panel by way of a hinge line. In the device comprising the plurality of panels, the first panel includes a first panel free end and the last panel includes a last panel free end, the first panel free end having a first shape, the last panel free end having a second shape complementary to the first shape.

[0025] The device comprising the plurality of panels, is able to assume a book condition where the panels are folded along hinge lines and an enclosure condition where the panels are extended to form an open enclosure having an open top and an open bottom, wherein, in the enclosure condition, the first panel free end is connected with the last panel free end and the child is able to be located within the enclosure.

[0026] According to a fifth aspect a device comprising a plurality of panels is disclosed. The device comprising a plurality of panels includes a first panel and a last panel, each panel separated from an adjacent panel by way of a hinge line, the

first panel including a first panel free end and the last panel including a last panel free end. The device comprising a plurality of panels is able to assume a book condition where the panels are folded along hinge lines and an enclosure condition where the panels are extended to form an enclosure, wherein all of the hinge lines of the device are substantially in a same direction, and wherein, in the enclosure condition, the first panel free end is complementarily connected with the last panel free end.

[0027] According to a sixth aspect a collapsible enclosure is disclosed. The collapsible enclosure comprises a plurality of panels including a first panel and a last panel. In the collapsible enclosure comprising a plurality of panels, each panel is separated from an adjacent panel by way of a hinge line. In the collapsible enclosure comprising the plurality of panels the first panel includes a first panel free end and the last panel includes a last panel free end, the first panel free end complementarily connectible with the last panel free end, wherein all hinge lines of the enclosure are substantially in a same direction.

[0028] According to a seventh aspect, a method of forming a combination book and enclosure for a child, is disclosed. The method is also for forming a collapsible enclosure and a device as herein disclosed. The method comprises providing a series of panels having a first panel and a last panel, at least one of the panels having a printed feature and providing the child with the series of panels, wherein the child is able to use the combination in the first mode and in the second mode and wherein the child is inside the being inside the enclosure when using the combination in the second mode.

[0029] In the series of panels provided in the method, each two adjacent panels are in end to end relationship around a hinge line so as to be foldable in a fan-like mode, the first panel having a first panel free end and the last panel having a last panel free end.

[0030] In the series of panels provided in the method, the first panel free end and the last panel free end are connectable together when the panels are opened and extended such that the first panel free end and the last panel free end can be brought into contact.

[0031] In the series of panels provided in the method, a first panel connection feature on the first panel free end is for mating engagement with a complementary last panel connection feature on the last panel free end.

[0032] In the series of panels provided in the method, the panels in a first mode are readable sequentially as a book when successive panels are sequentially turned about hinge lines between the panels.

[0033] In the series of panels provided in the method, the panels in a second mode are extendible from the first panel to the last panel and the first panel connection feature and the last panel connection feature are brought into mating engagement thereby to form an enclosure suitable to include the child.

[0034] Therefore, the present invention advantageously allows both an enclosure and a book to be obtained by means of the same product.

[0035] Throughout the present disclosure, the term enclosure will be intended to mean any structure having at least one open surface and enclosing a space, the space being suitable for a child to be positioned within such enclosure.

[0036] The combination book and enclosure, the collapsible enclosure and the device have therefore a series of panels, at least one of the panels having a printed feature. The panels are in an end-to-end relationship around a hinge line so as to be foldable in a fan-like mode. The hinge lines are preferably oriented in the same direction.

[0037] The first panel and the last panel in the series have respective free ends. The free end of the first panel and the free end of the last panel are connectable together when the panels are opened and extended such that the free ends can be brought into contact.

[0038] A connection feature of the free end of the first panel is for mating engagement with a complementary mating connection feature on the free end of the last panel. In a first mode, the panels are readable sequentially as a book when successive panels are sequentially turned about a hinge line between the panels.

[0039] In a second mode, the panels are extendible from the front panel to the last panel and the respective connection features are brought into mating engagement to form an enclosure.

[0040] Preferably, each panel has a printed feature, which is self contained on one face of the panel. Preferably, printed features on the front and/or reverse faces of at least two adjacent panels form a composite printed feature thematically overlapping along the panels. More preferably, all the reverse panels overlap thematically from one panel to the adjacent panel to create a wrap around theme. The themes on one face of the panels are preferably thematically related to the themes on the reverse face of the panels.

[0041] Preferably, the connection features on the first and last panel are mating shapes, for example jigsaw shapes, cut out in the free ends of the first and last panel.

[0042] Preferably, the panels are in an end-to-end relationship therebetween, with the free end of a first panel and the free end of an adjacent panel being into contact when the panels are placed in a relative extended relationship.

[0043] A connection feature of the free end of a first panel is for mating engagement with a complementary mating connection feature on the free end of an adjacent panel. The panels are extendible to form the enclosure. Between at least two adjacent first and last panels respective connection features are brought into mating engagement to form an enclosure.

BRIEF DESCRIPTION OF THE DRAWINGS

[0044] The present disclosure will be better understood with reference to a series of drawings, provided as non-limiting examples thereof.

[0045] Figure 1 is a perspective view of the panels as an enclosure;

[0046] Figure 2 is a perspective view of the panels as a book;

[0047] Figure 3 is a perspective view of the first and last panels closed with jigsaw formations;

[0048] Figure 4 is an open view of one side of the panels; and

[0049] Figure 5 is an open view of the opposite side of the panels.

DETAILED DESCRIPTION

[0050] Throughout the present disclosure, reference will be made to the numerals shown in Figures 1-5, without following a definite order, for better clarity of exposure.

[0051] A combination book and enclosure has a series of panels (10), (11), (12), (13), (14). At least one of the panels (10) to (14) has a printed feature (10a), (11a), (12a), (13a), or (14a).

[0052] The panels are in an end-to-end relationship around hinge lines (15) so as to be foldable in a fan-like mode. The first panel (10) and the last panel (14) in the series have respective free ends (16) and (17), meaning with this that the ends (16) are (17) are disconnectable according to the wishes of the user. The free end (16) of the first panel (10) and the free end (17) of the last panel (14) are connectable together when the panels are opened and extended such that the free ends (16) and (17) can be brought into engagement.

[0053] Each panel (10) to (14) is preferably sized to be about 12 to 15 inches (30.48 cm to 38.1 cm) in height and about 8 to 10 inches (20.32 cm to 25.4 cm) in width. The thickness of each panel (10) to (14) is preferably about 1/4 to 1/2 inches (0.635 cm to 1.27 cm). Each of the panels (10)-(14) is preferably formed of a corrugated board material, which is covered with a smooth face. Between the ends of each panel, adjacent to the hinges lines (15), the panels (10) to (14) are preferably thinned, so that there are no corrugations in the face material. As such, the thinned material facilitates forming the hinged line (15) between adjacent panels. A printed or decorative format (10a) to (14a) is pasted on the panels (10) to (14) on the front face. A printed or decorative format is formed on the reverse faces (10b), (11b), (12b), (13b), and (14b) to form a continuous theme (18) across all the faces (10b) to (14b).

[0054] A connection jigsaw feature (19) of the free end (16) of the first panel (10) is for mating engagement with a complementary mating connection jigsaw feature (20) on the free end (17) of the last panel (14). The connection feature on a front panel and the last panel are mating jigsaw cut out shapes (19) and (20) in the free ends (15) and 17. The jigsaw features (19) and (20), have three extending protrusions

between three interplaced slots at the end of each of the first panel (10) and the last panel (14). The protrusions and the slots of the first panel (10) are oppositely located relative to the slot and protrusions of the last panel (14). The height of each protrusion and slot is substantially the same so that the respective oppositely located front (10) and rear (14) panels. As such these panels can be interlocked and the enclosure (21) formed.

[0055] More generally, the connection between the free end of the first panel and the free end of the last panel is a complementary connection, where preferably female elements on a first end come into engagement with male elements on the other end and vice versa. The complementary connection shown in Figures 1 and 3 is particularly advantageous because it allows a book condition to be reached which permits the various panels to be moved like pages of a book, as shown in Figure 2, where the complementary shape of the free end of the first and last panel allows the various pages to be easily turned. Additionally, as shown in Figure 2, the person skilled in the art will appreciate that the width of the first and last panel is preferably the same width as the other panels, thus allowing a book condition to be reached where the only difference in shape between the first/last panel and the remaining panels is the shape of the free end of the first/last panels.

[0056] The panels (10) to (14) in a first mode are readable sequentially as a book (22) when successive panels are sequentially turned about the hinge line (15) between the panels (10)-(14). Since the book is a fan-like format the hinges (15) are respectively at the opposite ends of each panel, except for the free ends of the first (10) and rear (14) panels.

[0057] The panels (10) to (14) in a second mode are extendible from the front panel (10) to the last panel (14) and the respective connection features (19) and (20) are brought into mating jigsaw engagement thereby to form the enclosure (21).

[0058] From observation of Figures 1 and 3, the person skilled in the art will also understand that the length of the enclosure is partially controllable, due to a plurality of conditions that each panel can assume (from partially extended to completely extended) and due to the plurality of mating engagements (not necessarily one completely inside the other) that the free ends of the first and last panel can assume.

[0059] The person skilled in the art will also understand that the present combination is very easy to change form from enclosure to book and book to enclosure without any particular effort or pressure to be exercised, therefore being particularly suitable for a child.

[0060] Each panel (10) to (14) has a printed feature (10a), (11a), (12a), (13a), and (14a) which is self-contained on one face of the respective panels. The printed features (10b), (11b), (12b), (13b), and (14b) on the reverse faces of at least two adjacent panels are a printed feature which overlap thematically. The thematical overlap from one panel to the adjacent panel thereby creates a wrap around theme for the enclosure (21).

[0061] In another form the printed features on both fronts (10a) to (14a) and the reverse (10b) to (14b) are thematically related and/or overlap thereby to create related themes between the front and reverse panels (10a) to (14a) and (10b) to (14b).

[0062] In another example, the collapsible enclosure (21) comprises a series of panels (10) to (14), at least some of the panels (10) to (14) having decorative features. The panels (10) to (14) are locatable in end-to-end relationship with the free end (16) of a first panel (10) and the free end (12) of an adjacent last panel (14) being connectable together. When the panels (10) to (14) are placed in a relative extended relationship the free ends (16) and (17) can be brought into contact.

[0063] The connection feature (19) of the free end (16) of a first panel (10) is for mating engagement with a complementary mating connection feature (20) on the free end (17) of an adjacent panel (14). The panels (10) to (14) are extendible to form the enclosure such that the respective connection features (19) and (20) brought into mating engagement form the enclosure (21).

[0064] Many other forms of the disclosure exist, each differing from the other in matters of detail only.

[0065] For instance, the shape of the jigsaw formations may be different to the square like protrusions and slots formed at the end of the respective panels. Different tongue and groove formations and shapes can be used.

[0066] The disclosure also includes having the feature of the enclosure formed with the protrusion and slots, even though there may be no book feature. The folding feature of the panels (10) to (14) without the thematically formed book material but having the jigsaw connections is also a part of the disclosure. Some or all of the panels may have windows. The panels may also assume different shapes. More than one set of jigsaw connections can be provided between different panels. Thus, there can be two or more different jigsaw connected panels for the enclosure.

[0067] A person skilled in the art will appreciate that features of the embodiments described above with reference to the combination book enclosure are also applicable to the collapsible enclosure and the device herein disclosed.

[0068] In summary, a combination book and enclosure, a collapsible enclosure, a device having a series of panels, at least one of the panels having a printed feature. The panels are in an end-to-end relationship around a hinge line so as to be foldable in a fan-like mode and the first panel and the last panel in the series having respectively free-ends. The free end of the first panel and the fee end of the last panel are connectable together when the panels are opened and extended such that the free ends can be brought into contact. A connection feature of the free end of the first panel are for mating engagement with the a complementary mating connection feature on the free end of the last panel. The panels in a first mode are readable sequentially as a book when successive panels are sequentially turned about the hinge line between the panels. The panels in a second mode are extendible from the front panel to the last panel and the respective connection features are brought into mating engagement thereby to form an enclosure.

[0069] The present disclosure has been explained with reference to specific embodiments. Other embodiments will be apparent to those of ordinary skill in the art in view of the foregoing description. The scope of protection of the present disclosure is defined by the appended claims.

WE CLAIM:

1. A combination book and enclosure comprising a series of panels having a first panel and a last panel, at least one of the panels having a printed feature, wherein:

each two adjacent panels are in end to end relationship around a hinge line so as to be foldable in a fan-like mode, the first panel having a first panel free end and the last panel having a last panel free end;

the first panel free end and the last panel free end are connectable together when the panels are opened and extended such that the first panel free end and the last panel free end can be brought into contact;

a first panel connection feature on the first panel free end is for mating engagement with a complementary last panel connection feature on the last panel free end;

the panels in a first mode are readable sequentially as a book when successive panels are sequentially turned about hinge lines between the panels; and

the panels in a second mode are extendible from the first panel to the last panel and the first panel connection feature and the last panel connection feature are brought into mating engagement thereby to form an enclosure suitable to enclose a child.

2. A combination as claimed in claim 1 wherein each panel has a first face and a second face, each panel having a printed feature which is self contained on the first face .

3. A combination as claimed in claim 2 , wherein printed features on second faces of at least two adjacent panels form a thematically overlapping printed feature.

4. A combination as claimed in claim 3 wherein the printed features on the second faces of all panels form the thematically overlapping printed feature, thereby creating a first wrap around theme.

5. A combination as claimed in claim 1 wherein each panel has a first face comprising a first face printing feature and second face comprising a second face printing feature, first face printing features of all panels thematically overlapping to create a first face wrap around theme, and second face printing features of all panels thematically overlapping to create a second face wrap around theme, the first face wrap around theme related with the second face wrap around theme.

6. A combination as claimed in claim 1 wherein the first panel connection feature and the last panel connection feature are mating jigsaw cut out shapes in the first panel free end and the last panel free end.

7. A combination book and enclosure comprising a series of panels having a first panel and a last panel, at least some of the panels having printed features; wherein:

each two adjacent panels are in end to end relationship around a hinge line so as to be foldable in a fan-like mode, the first panel having a first panel free end and the last panel having a last panel free end;

the first panel free end and the last panel free end are connectable together when the panels are opened and extended such that the first panel free end and the last panel free end can be brought into contact;

a first panel connection feature on the first panel free end is for mating engagement with a complementary last panel connection feature on the last panel free end;

the panels in a first mode are readable sequentially as a book when successive panels are sequentially turned about hinge lines between the panels, all of the hinge lines between the panels of the series of panels being substantially in a same direction;

the panels in a second mode are extendible from the first panel to the last panel and the first panel connection feature and the last panel connection feature are brought into mating engagement thereby to form an enclosure;

each panel having a front face, a reverse face, and a printed feature which is self contained on the front face;

printed features on reverse faces of at least two adjacent panels form a thematically overlapping printing feature; and

the first panel connection feature and the last panel connection feature are mating jigsaw cut out shapes in the first panel free end and the last panel free end .

8. A combination as claimed in claim 7 wherein the printing features on reverse faces of all panels form the thematically overlapping printing feature, thereby creating a first wrap around theme.

9. A combination as claimed in claim 8 wherein printing features on the front faces of all panels form an additional thematically overlapping printing feature,

thereby creating a second wrap around theme related with the first wrap around theme .

10. A collapsible enclosure comprising a series of panels having a first panel and a second panel, the second panel adjacent to the first panel, at least some of the panels having decorative features; wherein:

the first panel has a first panel free end and the second panel has a second panel free end;

the panels are locatable in end to end relationship, the first panel free end and the second panel free end connectable together when the first panel and the second panel are placed in a relative extended relationship such that the first panel free end and the second panel free end can be brought into contact;

a first panel connection feature on the first panel free end is for mating engagement with a complementary second panel connection feature on the second panel free end, the enclosure being a substantially circular enclosure formed when the first panel free end is brought into mating engagement with the second panel free end; and

the first panel connection feature and the second panel connection feature are mating jigsaw cut out shapes in the first panel free end and the second panel free end .

11. An enclosure as claimed in claim 10 wherein each panel has a front face, a reverse face, and a decorative feature which is self contained on the front face.

12. An enclosure as claimed in claim 10 wherein each panel has a front face, a reverse face, and a decorative feature which is self contained on the front face , and wherein decorative features on reverse faces of at least two adjacent panels form a thematically overlapping decorative feature.

13. An enclosure as claimed in claim 12 wherein the decorative features on the reverse faces of all panels form the thematically overlapping decorative feature thereby creating a first wrap around theme.

14. An enclosure as claimed in claim 10 wherein each panel has a front face comprising a front face decorative feature and reverse face comprising a reverse face decorative feature, front face decorative features of all panels thematically overlapping to create a front face wrap around theme, and reverse face decorative features of all panels thematically overlapping to create a reverse face

wrap around theme, the front face wrap around theme related with the reverse face wrap around theme.

15. An enclosure as claimed in claim 10, wherein the enclosure comprises an open top surface, an open bottom surface, and a substantially circular lateral surface.

16. An enclosure as claimed in claim 10, the enclosure being suitable to contain a child.

17. A combination as claimed in claim 1, wherein the enclosure is substantially circular.

18. A combination as claimed in claim 7, wherein the enclosure is substantially circular.

19. A device suitable to be used by a child, the device comprising a plurality of panels including a first panel and a last panel, each panel separated from an adjacent panel by way of a hinge line, the first panel including a first panel free end and the last panel including a last panel free end, the first panel free end having a first shape, the last panel free end having a second shape complementary to the first shape, the device being able to assume a book condition where the panels are folded along hinge lines and an enclosure condition where the panels are extended to form an open enclosure having an open top and an open bottom, wherein, in the enclosure condition, the first panel free end is connected with the last panel free end and the child is able to be located within the enclosure.

20. The device of claim 19, wherein the first shape has a tongued appearance and the second shape has a grooved appearance.

21. The device of claim 19 or 20, wherein the first panel and the last panel have substantially the same width.

22. The device of claim 19, wherein the enclosure is substantially circular.

23. The device of claim 22, wherein circularity is formed by multiple straight line panels.

24. The device of claim 19, wherein all of the hinge lines are substantially parallel to each other.

25. The device of claim 19, wherein, in the enclosure condition, no hinge lines are contiguous to each other.

26. A device comprising a plurality of panels including a first panel and a last panel, each panel separated from an adjacent panel by way of a hinge line, the first

panel including a first panel free end and the last panel including a last panel free end, the device being able to assume a book condition where the panels are folded along hinge lines and an enclosure condition where the panels are extended to form an enclosure, wherein all of the hinge lines of the device are substantially in a same direction, and wherein, in the enclosure condition, the first panel free end is complementarily connected with the last panel free end.

27. A collapsible enclosure comprising a plurality of panels including a first panel and a last panel, each panel separated from an adjacent panel by way of a hinge line, the first panel including a first panel free end and the last panel including a last panel free end, the first panel free end complementarily connectible with the last panel free end, wherein all hinge lines of the enclosure are substantially in a same direction.

28. A method of forming a combination book and enclosure for a child, comprising:

providing a series of panels having a first panel and a last panel, at least one of the panels having a printed feature wherein:

each two adjacent panels are in end to end relationship around a hinge line so as to be foldable in a fan-like mode, the first panel having a first panel free end and the last panel having a last panel free end,

the first panel free end and the last panel free end are connectable together when the panels are opened and extended such that the first panel free end and the last panel free end can be brought into contact,

a first panel connection feature on the first panel free end is for mating engagement with a complementary last panel connection feature on the last panel free end,

the panels in a first mode are readable sequentially as a book when successive panels are sequentially turned about hinge lines between the panels, and

the panels in a second mode are extendible from the first panel to the last panel and the first panel connection feature and the last panel connection feature are brought into mating engagement thereby to form an enclosure suitable to include the child; and

providing the child with the series of panels, wherein the child is able to use the combination in the first mode and in the second mode and wherein the child

is inside the being inside the enclosure when using the combination in the second mode.

FIG. 1

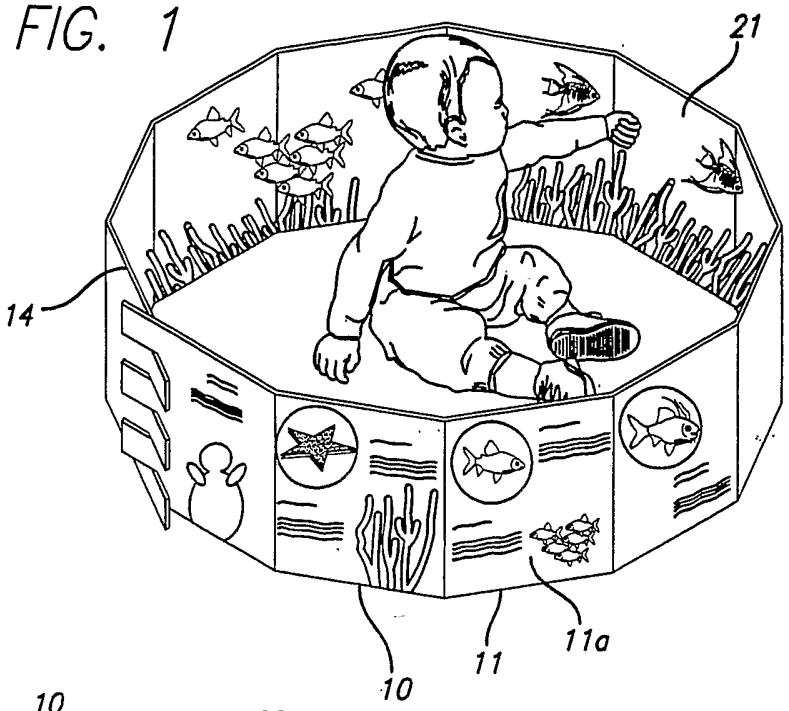

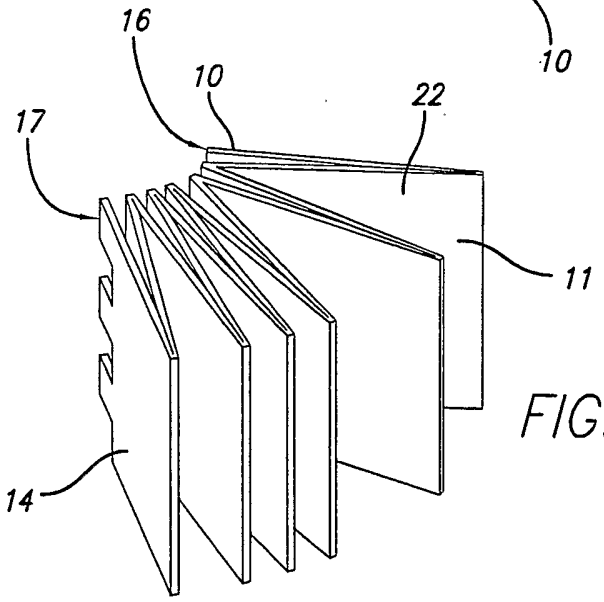

FIG. 2

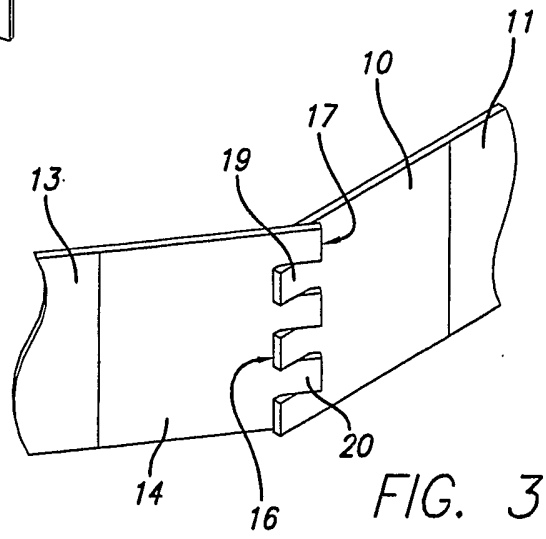

FIG. 3

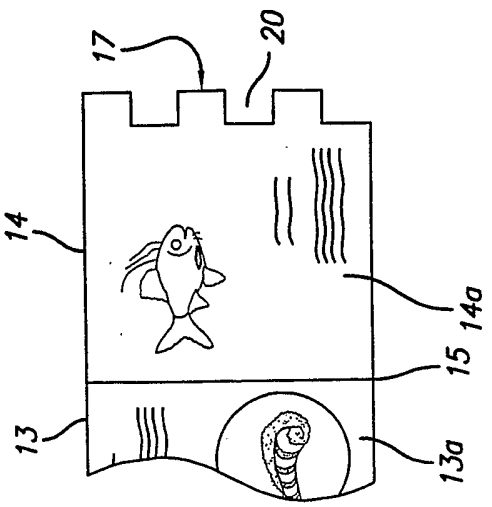
17
20
14
14a
15
13
13a

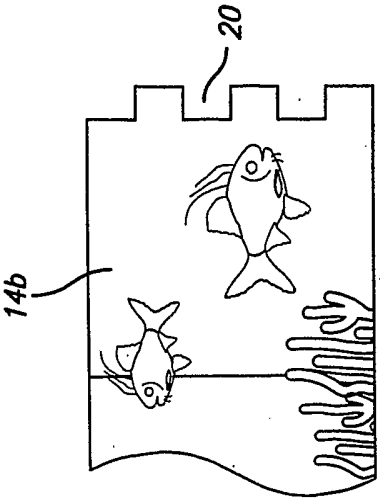
20
14b

FIG. 4

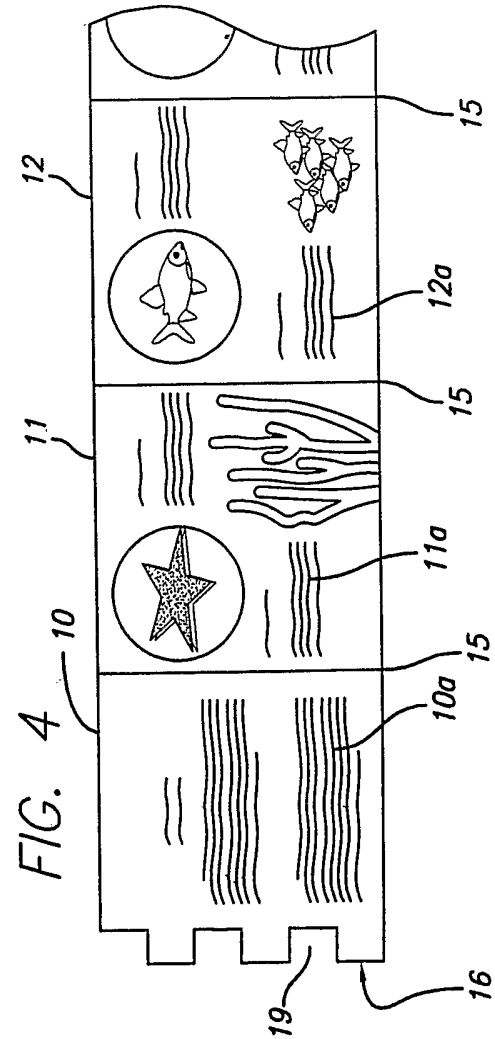
12
15
12a
11
15
11a
10
15
10a
19
16

FIG. 5

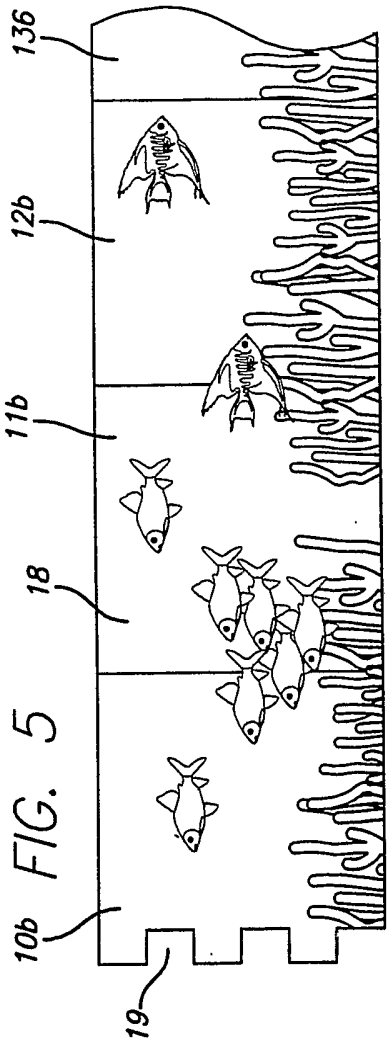
136
12b
11b
18
10b
19