April 13, 1937. H. M. RISHEL 2,077,188

ROLLER CONVEYER

Filed March 23, 1936 3 Sheets-Sheet 1

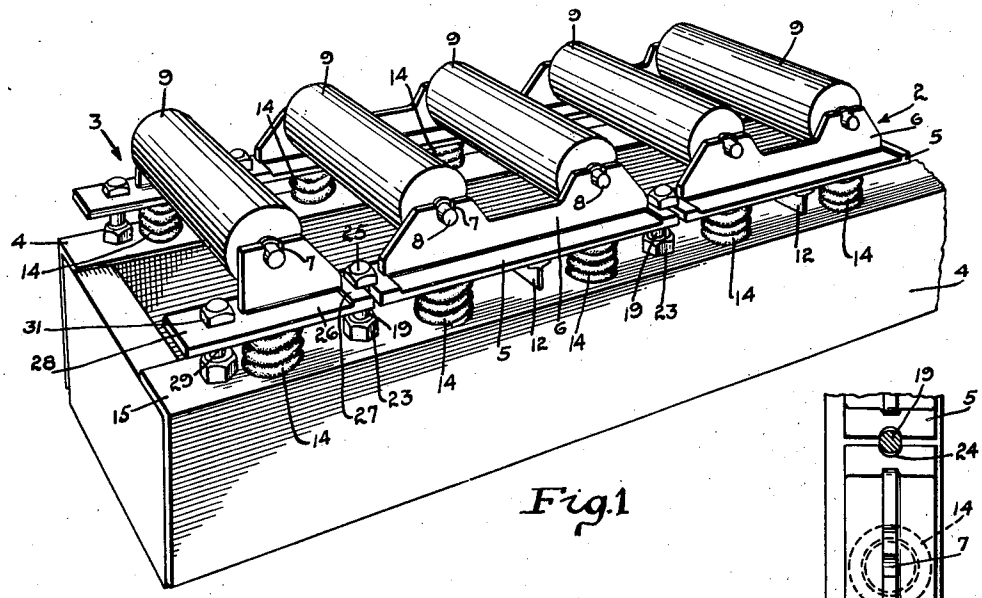

Fig. 1

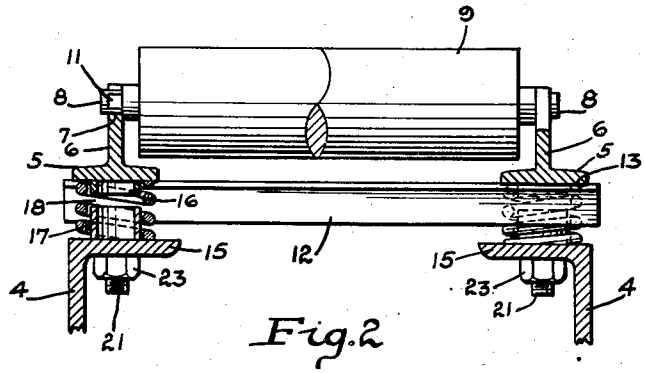

Fig. 2

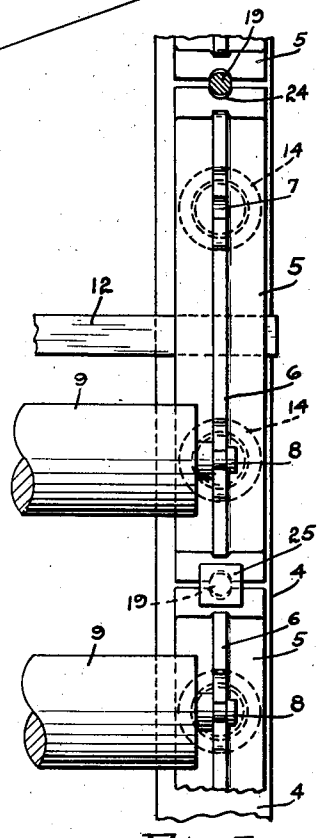

Fig. 3

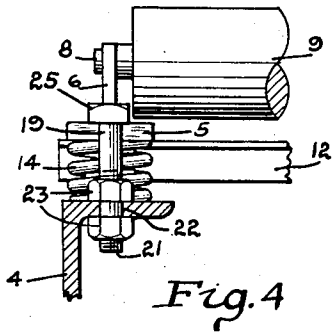

Fig. 4

INVENTOR
HUBERT M. RISHEL
BY Paul, Paul & Moore
ATTORNEYS

April 13, 1937. H. M. RISHEL 2,077,188

ROLLER CONVEYER

Filed March 23, 1936 3 Sheets-Sheet 2

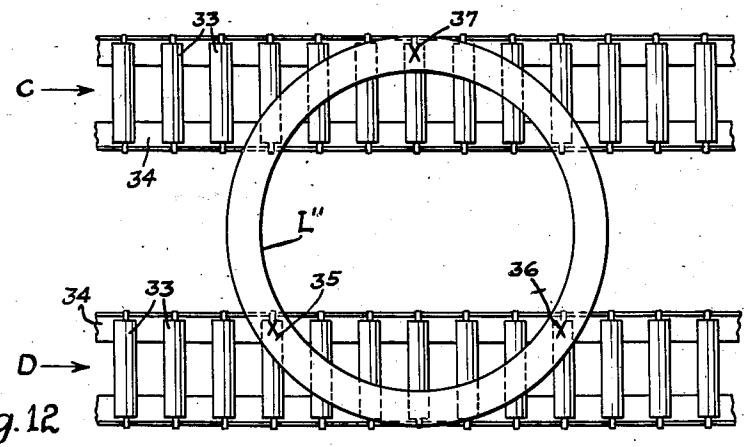

Fig. 12

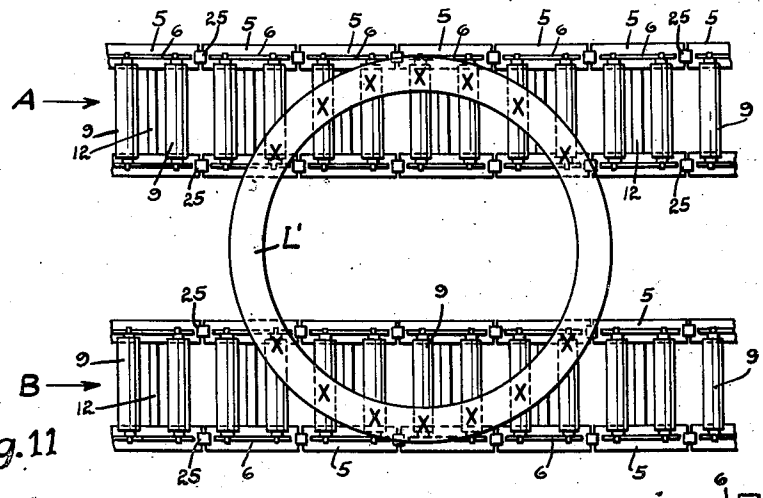

Fig. 11

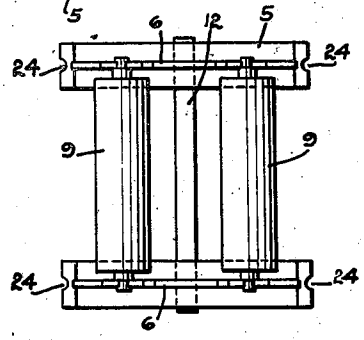

Fig. 5

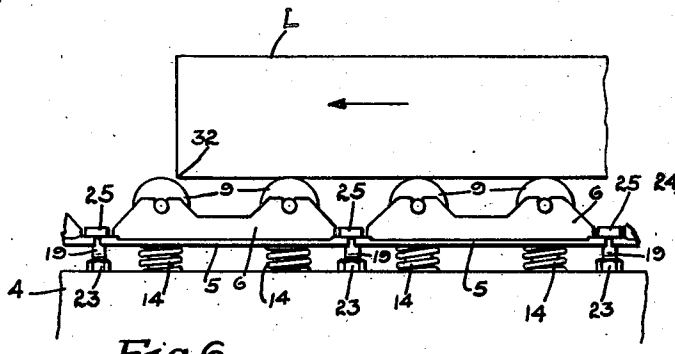

Fig. 6

INVENTOR
HUBERT M. RISHEL
BY Paul, Paul & Moore
ATTORNEYS

April 13, 1937. H. M. RISHEL 2,077,188

ROLLER CONVEYER

Filed March 23, 1936 3 Sheets-Sheet 3

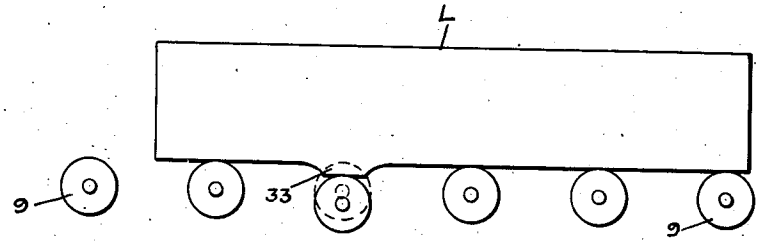

Fig. 7

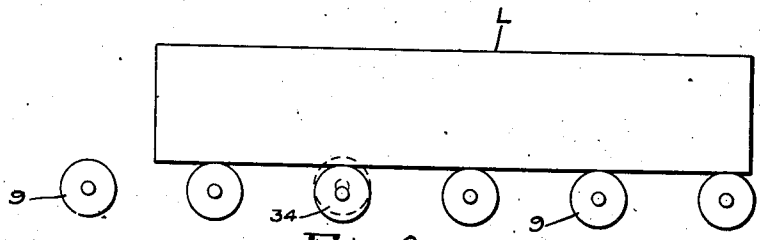

Fig. 8

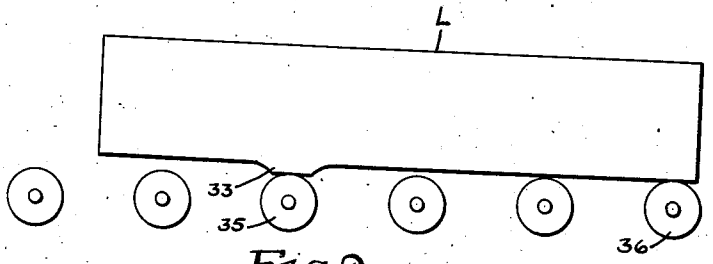

Fig. 9

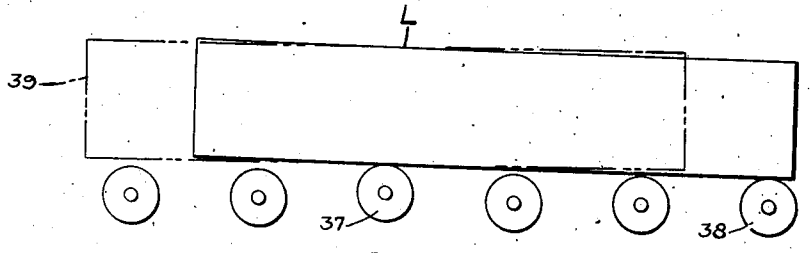

Fig. 10

INVENTOR
HUBERT M. RISHEL
BY Paul P. Pauly & Moore
ATTORNEYS

Patented Apr. 13, 1937 2,077,188

UNITED STATES PATENT OFFICE

2,077,188

ROLLER CONVEYER

Hubert M. Rishel, Edwardsville, Ill., assignor to Mathews Conveyer Company, Ellwood City, Pa., a corporation of Pennsylvania

Application March 23, 1936, Serial No. 70,202

10 Claims. (Cl. 193—35)

This invention relates to new and useful improvements in conveyers, and more particularly in roller conveyers.

In recent years, roller conveyers have become very popular in a great many industries as they offer a convenient and economical means of transportation of articles and commodities from one place to another. Roller conveyers are commonly used as gravity conveyers and push line conveyers. When used as gravity conveyers they are inclined or set on sufficient grade for the articles to move by gravity. When used as push lines, the conveyers are set level or on a very slight grade, and the loads are usually propelled along the conveyers by hand. In roller conveyers of this general type, as now commonly constructed, the rollers are usually mounted rigidly in stationary frames, generally known as frame rails. These frame rails, in turn, are supported by non-yieldable supports such as steel frames, concrete piers, etc.

During recent years, many new uses have been found for roller conveyers, particularly in large industrial plants such as foundries, and iron and steel mills, where they are used for transporting heavy loads, castings, or groups of castings laid upon racks or skids, which in turn, are carried upon roller conveyers. Roller conveyers are also now commonly used in large sheet steel mills for transporting heavy loads, consisting of packs of sheet metal, coils of strip steel, etc. Such loads frequently weigh several tons. Conveyers having rigidly mounted rollers have proven satisfactory for handling relatively light loads, but such conveyers have been found to be inefficient in some respects, when used for transporting extremely heavy loads, primarily because the major portion of the weight of the load may, at times, be transmitted to but a single roller, or a few rollers, whereby such rollers may become greatly overloaded. As an illustration, a load being transported over a conveyer and spanning or covering a given number of rollers as, for example, ten, should contact each of the ten rollers spanned thereby, if the weight of the load is to be substantially equally distributed on the ten rollers positioned therebeneath.

From actual experience, however, I have found that when a load is transported over a conveyer in which the rollers are rigidly mounted, the entire weight of the load is not always uniformly distributed on all of the rollers spanned by the load. Such limited contact of the load with the rollers may result from various causes as, for example, a conveyer may have a "high spot", caused by one or more of the rollers being disposed at a slightly higher elevation than adjacent rollers. In the construction of roller conveyers, it has been found most practical to use antifriction bearings of the loose type. This, together with roller tube eccentricity and other slight inaccuracies inherent in the construction of roller conveyers, and variation in the diameter of the rollers, as a result of wear, may result in the tops of the rollers of a given conveyer, not all being disposed in the same plane. Such vertical misalinement of the rollers of a conveyer may cause high spots in the upper surface of the conveyer. A similar condition may arise when a new unworn roller is interposed in an old conveyer, because the new roller may be larger in diameter than the old or worn rollers of the conveyer. When the above condition is present, the major portion of the weight of the load will be momentarily transmitted to the high roller or rollers, as the load passes thereover, and when the mounting of the rollers is such that the rollers cannot yield when subjected to an overload, damage to the roller is likely to occur.

In other cases, the load itself may have an uneven or warped bottom, whereby the bottom of the load will not contact uniformly with all of the rollers spanned thereby. When a load being transported over a conveyer in which the rollers are rigidly mounted, has a portion depending below the bottom surface thereof, said depending portion may cause each roller engaged thereby to become temporarily overloaded, primarily because of the inability of the rollers to yield, when subjected to an overload. Other irregularities in the conveying surface of the conveyer may also occur as a result of the supporting rails or foundations of the rollers slightly settling or heaving, or because of a shock or jolt being imparted thereto when an article is carelessly placed on the conveyer. Variations may also result from expansion or contraction, due to temperature changes.

Obviously, when the entire weight of a load, weighing perhaps several tons, is temporarily concentrated on a single roller or on a few rollers, these rollers may become greatly overloaded, which may permanently damage the roller bearings, or the rollers themselves may become distorted or bent. I have also found that when placing a load on a conveyer, whose rollers are rigidly mounted, the impact of the load with the rollers may cause the bearings to become damaged, or the rollers may become bent. Under these conditions, roller and bearing replacements become necessary, and result in a high maintenance and operating cost, and may often result in costly delays.

Another objection to the use of conveyers having non-resiliently mounted rollers, particularly when used for transporting relatively heavy loads, is that considerable power is usually required to propel the load over the conveyer bed, because of the weight of the load not being uniformly distributed on all of the rollers disposed under the

load. For example, when transporting a pack of metal sheets over a conveyer, the forward lower corner of the pack may droop or sag, causing it to strike or impinge against each roller, as the load is propelled along the conveyer. When the rollers are non-resiliently or rigidly mounted in their supports, so that they cannot yield when subjected to an overload, the forward portion of the load must be relatively lifted each time it passes over a roller, which tends to retard the forward movement of the load, and therefore requires that additional power be expended to propel the load. If the conveyer is of the gravity type, the grade or inclination of the conveyer must be somewhat increased to allow for this contingency.

In the novel conveyer herein disclosed, all of the above mentioned objectionable features have been substantially eliminated. This, I have accomplished by resiliently mounting the rollers upon their supporting means in such a manner that when any roller, or number of rollers are subjected to an overload, said overloaded rollers may yield to the pressure of the load, whereby their bearings are not likely to become damaged, nor the rollers bent or distorted. Means is also provided for controlling or regulating the pre-compression of the resilient means supporting the rollers, which pre-compression may be based upon the maximum weight of the load to be transported over the conveyer under ordinary operating conditions and/or the carrying capacity of the bearings for the rollers. The resilient elements are preferably so tensioned that the rollers are normally retained at their uppermost positions against suitable limit stops, when a load is being transported over the conveyer, and the resilient elements yield or flex only when the rollers supported thereon are subjected to an overload. By thus constructing the conveyer, each roller will carry its approximate proportionate share of the weight of the load, whereby the size or load carrying capacity of the conveyer rollers required for each given installation may readily be determined. To determine the load-carrying capacity of a given conveyer, when the maximum weight of the load and the minimum number of rollers engaged by the load at one time, are known, the maximum weight of the load to be carried by the conveyer is divided by the minimum number of rollers engaged by the load at one time, whereby the load per roller is readily determined. Heretofore, it has been difficult to accurately determine the proper size rollers for a given conveyer installation because of the rollers being non-resiliently mounted in their supporting means, whereby the entire weight of the load may, at times, be concentrated on one or only a few rollers.

Another advantage gained by resiliently mounting the rollers upon their supports, and pre-compressing the resilient elements, as herein described, whereby each roller, when subjected to an overload, may yield to the pressure of the load, is that less power is required to propel the load. This results because, under normal operating conditions, none of the rollers are unduly overloaded, by reason of their ability to yield when an overload is imparted thereto, thereby decreasing bearing friction to a minimum. Also, when the load is of such a nature that the front bottom edge or corner thereof sags below the plane of the bottom of the load, and initially impinges or strikes against each roller, as the load moves over the conveyer, said rollers may yield and permit the load to pass over the conveyer without offering any material resistance to the forward movement of the load.

An important object of the present invention, therefore, is to provide a roller conveyer wherein the rollers are so arranged relative to their supporting means that each roller may yield, when subjected to an overload, whereby bearing friction is reduced to a minimum, and damage to the bearings and rollers is substantially eliminated. The novel construction of the conveyer also assures that the weight of the load being transported over the conveyer will be substantially uniformly distributed on all of the rollers spanned by the load.

A further object is to provide a roller conveyer comprising a plurality of rollers having suitable resilient elements providing yieldable supports therefor, whereby each roller may yield when engaged by an overload, and means being provided for retaining said resilient elements under a predetermined compression, which may be easily determined by the load to be carried over the conveyer.

A further object is to provide a roller conveyer comprising a plurality of independently movable, resiliently mounted rollers, so arranged that each roller may yield independently of the others, when engaged by an overload, whereby all of the rollers over which the load may be supported, will engage the load with a yieldable pressure, and whereby the entire weight of the load will be substantially uniformly distributed on all of the rollers engaged by the load.

A further object is to provide a conveyer comprising a plurality of independently movable conveyer units, each comprising a resiliently supported frame in which suitable anti-friction rollers are mounted, and means being provided for supporting said frames in operative relation, whereby all of the rollers supported in said frames are spaced apart along the conveyer.

A further object is to provide a roller conveyer comprising a plurality of independently movable spring mounted rollers so constructed that shocks, resulting from dropping loads on the conveyer, will be absorbed by the resilient mountings thereof, thereby substantially eliminating damage to the conveyer rollers and their bearings.

Other objects reside in the sectional construction of the conveyer, as a whole, which is composed of a plurality of spring mounted frames or units, each carrying one or more rollers, and whereby each roller may yield when subjected to an overload; in the construction of the conveyer units each of which comprises spaced frame members, between which anti-friction conveyer rollers are mounted, and each frame member being supported upon a plurality of resilient elements having means for adjusting and retaining them under a predetermined tension, and whereby said elements may be precompressed in accordance with the load to be carried so that, under normal operating conditions, said resilient elements will support their respective rollers without yielding or flexing, but if one or more of said rollers is subjected to an overload, the resilient elements supporting said overloaded roller will yield, thereby to prevent the roller and its bearings from becoming damaged.

Other objects of the invention will appear from the following description and accompanying drawings and will be pointed out in the annexed claims.

In the accompanying drawings there has been

disclosed a structure designed to carry out the various objects of the invention, but it is to be understood that the invention is not confined to the exact features shown as various changes may be made within the scope of the claims which follow.

In the drawings:

Figure 1 is a perspective view showing a portion of a conveyer constructed in accordance with the invention;

Figure 2 is a detail cross-sectional view, showing the means provided for resiliently supporting the rollers upon their supporting means;

Figure 3 is a detail plan view of a portion of Figure 1;

Figure 4 is a detail sectional view showing a means for limiting upward movement of the side frames, and which means also serves to retain adjacent frames in operative relation;

Figure 5 is a plan view showing one of the units removed from its supporting means;

Figure 6 is a side elevation of a portion of a conveyer, constructed in accordance with the invention, and showing the rollers in their normal load-carrying positions;

Figure 7 is a diagrammatic view showing how each roller may yield, when the nature of the load is such as to impart an overload to one or more of the rollers;

Figure 8 is a diagrammatic view, showing a conveyer of the type herein disclosed, in which one of the rollers is positioned above the adjacent rollers, as indicated by the dotted lines, which may result from any one of several causes already explained, whereby said relatively higher roller will be depressed by the load, as the latter travels over the conveyer, if the weight of the load, or a portion thereof, exceeds the normal capacity of each roller;

Figure 9 diagrammatically illustrates how each roller of a conveyer of the type in which the rollers are rigidly mounted, may be greatly overloaded, because of the inability of the rollers to yield when subjected to an overload;

Figure 10 is a diagrammatic view, illustrating the overload which may be imparted to certain rollers of a conveyer having non-yieldable rollers, when the rollers thereof are not horizontally alined;

Figure 11 is a plan view, showing a conveyer comprising two rows of rollers, and illustrating the uniform distribution of the weight of the load on all of the rollers engaged thereby, when the rollers are resiliently mounted on their supports; and

Figure 12 is a plan view, showing a portion of a conventional type of conveyer, wherein the rollers are rigidly mounted, and also illustrating how the entire weight of the load may be carried by a very small percentage of the rollers over which the load is disposed.

The novel conveyer herein disclosed is best shown in Figure 1, and comprises a plurality of conveyer units, generally indicated by the numeral 2. These units may be supported in longitudinal alinement upon suitable supporting members 4—4, which, in the present instance, are shown consisting of suitable beams or bars of angular cross-section, preferably arranged as shown in Figures 1 and 2.

The conveyer units 2 are preferably alike in construction and it will therefore, be necessary to describe but one in detail. Each conveyer unit 2 comprises a frame consisting of side members 5—5 preferably tied together by a cross member 12 having its end portions suitably secured to the horizontally flanged portions 13 of the side member 5, by such means as welding. Each side member 5 is shown having an upstanding flange 6, which may be provided with suitable notches 7 in their upper edges adapted to receive the ends of suitable axles 8, provided with suitable bearings (not shown) for rotatably supporting conveyer rollers 9. The terminals of the axles are shown flattened on opposite sides, as indicated at 11 in Figure 2, to prevent relative rotation of the axles in the side members 5 of the frame. If desired, the ends of the axles may be squared, or otherwise shaped, to prevent relative rotation thereof, or the axles may be rotatably supported in suitable bearings provided in the side frame members 5. When thus supported the rollers are fixedly secured to the axles.

An important feature of the present invention resides in the novel manner of supporting the conveyer rollers 9, whereby they are capable of independently yielding, when subjected to an overload, and also whereby the rollers are so mounted that when a uniformly distributed load passes thereover, the rollers are retained substantially in their normal alined positions. To thus yieldably or resiliently support the conveyer rollers 9—9, the conveyer units 2 and 3 are shown supported upon a plurality of resilient elements such, for example, as springs 14. These springs are interposed between the upper horizontal flanges 15 of the supporting beams 4 and the horizontal portions 13 of the side frame members 5 of the units.

To retain the springs 14 in their proper positions between the horizontal portions 13 and 15 of the frame members 5 and supporting beams 4, respectively, the parts 13 and 15 are shown provided with suitable bosses or centering elements 16 and 17, respectively, which are vertically alined and of such size as to be received within the springs, as best shown in Figure 2, whereby the springs cannot become disarranged. The adjacent ends of the centering elements 16 and 17 are spaced apart, as shown at 18 in Figure 2, to permit relative vertical movement of the frame members 5, when a roller is engaged by an overload. The centering elements 16 and 17 also function to provide limit stops for the downward movement of the conveyer units, when subjected to an excessive overload.

Another important feature of the invention resides in the provision of means for maintaining the spring elements 14 under a predetermined compression, whereby the tension under which these springs are placed, is such as to prevent the rollers from yielding to any appreciable extent, when a load within the capacity of each individual roller passes over the conveyer, but which will permit each roller to yield, when subjected to an overload. The pre-compression of the springs 14 may be determined for example by the weight of the load to be carried by the conveyer, and/or by the carrying capacity of the bearings for the rollers.

To thus retain the springs 14 under a predetermined compression, studs 19 are adjustably secured to the upper horizontal flanges 15 of the supporting beams 4. These studs, as best illustrated in Figure 4, are preferably in the form of bolts, and have their lower threaded end portions 21 received in suitable apertures 22 provided in the flanges 15 of the supporting beams 4, and secured therein by suitable nuts 23. The studs 19 are interposed between adjacent ends of the side

members 5 of the frames of adjacent units, as best illustrated in Figures 1 and 3, and the terminals of the frame members 5 may be notched, as shown at 24 (Fig. 5), to receive the studs 19. Each stud has a head 25 adapted to be engaged by the upper faces of the terminals of adjacent frame members 5 to limit the upward movement of the units. The springs 14, being normally under compression, firmly hold the terminals of the frame members 5 in contact with the heads 25 of the studs, as will be clearly understood by reference to Figure 1. The compression of the springs 14 may be varied by relatively adjusting the studs 19 in the flanges 22 of the supporting beams 4, by manipulation of the nuts 23, but is preferably always such as to prevent the rollers from relatively yielding, when a uniformly distributed load passes over the conveyer.

The ends of the conveyer may be composed of the relatively smaller conveyer units 3, each of which may comprise but a single conveyer roller 9, as clearly illustrated in Figure 1. Each end unit 3 comprises side frames 26 having notched terminals 27 adapted to be engaged by the adjacent studs 19, as clearly illustrated in Figure 1. The opposite end portions 28 of the frame members 26 of the unit 3 are shown apertured to receive studs or bolts 29, adjustably secured to the flanges 15 of the supporting beams 4, and having their heads 31 limiting upward movement of the unit 3. The unit 3 is supported upon springs 14 in a manner similar to the conveyer units 2. In some installations, the end unit 3, shown in Figure 1, may be dispensed with, in which case, the conveyer may be composed of like units 2. This, however, is optional.

The novel conveyer, herein disclosed, has been found particularly useful in large industries, such as foundries and steel mills, where extremely heavy loads are conveyed from one place to another, although it may be used in many other places where it is essential that the weight of the load to be conveyed is distributed uniformly on all of the rollers spanned by the load at one time. The conveyer may comprise but a single row of rollers, as illustrated in Figure 1, or, it may consist of two or more rows of rollers, as illustrated in Figure 7, depending upon the size and character of the load to be conveyed. The conveyer, as shown in Figures 1 and 6, is composed of a plurality of spring mounted units arranged in horizontal alinement lengthwise of the conveyer and retained in such alinement by the studs 19.

In describing the operation of this novel conveyer, it is to be understood, as previously stated, that one of the outstanding features of the invention resides in the pre-compression of the springs or resilient means which support the rollers, whereby the rollers do not, under ordinary operating conditions, yield to the weight of a uniformly distributed load, but yield only when subjected to an overload.

Figure 6 shows a load of normal weight traveling over a conveyer, in which the uppermost portions of all of the conveyers are shown retained in the same horizontal plane by the action of the spring elements 14. When the tops of the rollers are thus alined, and the bottom of the load is substantially smooth, and the weight of the load does not exceed the safe carrying capacity of the rollers, the load will travel over the conveyer without depressing the rollers, as clearly illustrated in Figure 6.

To afford a clear explanation of the invention, if a load to be conveyed weighs say, for example, 1200 pounds and each roller has a safe carrying capacity of 300 pounds, then to avoid overloading the rollers, the spacing between the rollers should be such that at least four rollers are always engaged by the load. When thus spaced, the load imposed on each roller will be within the safe carrying capacity of the rollers, individually, or about 300 pounds, assuming, of course, that the load is substantially equally distributed on the four rollers. Under the above conditions, the pre-compression of each pair of the spring elements 14 is preferably at least 300 pounds, or 150 pounds per spring, whereby the elements 14 will not yield when a uniformly distributed load passes over the conveyer. Should the load, however, have an uneven bottom surface, as indicated at 33 in Figure 7, each time said depending portion engages a roller, an overload may be temporarily imposed thereon, which will cause the roller to yield under the abnormal pressure imposed thereon by the overload, as clearly shown in the full lines in Figures 7 and 8. It is to be understood that the space or gap 18 provided between the spring centering elements 16 and 17 is of such size as to prevent the elements 16 and 17 from contacting one another when the overloaded roller is depressed, thereby positively preventing the roller or its bearings from becoming damaged, as a result of an overload being temporarily imposed thereon. In actual use it is impractical in production methods to accurately align the top surfaces of all of the resiliently mounted rollers so that they are in a single plane. While such adjustment might be made, the cost would be prohibitive and impractical and unnecessary as a small fraction of an inch misalignment of any one roller would be sufficient to throw an unequal distribution of the load on the rollers supporting the load were it not for the resilient mounting of the rollers. Furthermore in some instances, skids are used to support the load over a plurality of rollers. These skids are seldom if ever provided with true flat surfaces that are in a single plane. One of the important features of the present invention is the automatic distribution of the load on the rollers supporting the same as such load passes thereover. In other words, the rollers that are high or slightly above other load supporting rollers, are depressed so that the load is distributed over all the rollers in contact therewith as it moves over the conveyer. Hence accurate and true alignment of all of the rollers is unnecessary and a roller alignment in accordance with modern production methods is entirely satisfactory. It is this automatic distribution of the load which permits the load to move freely and with noticeably less effort over a resiliently mounted roller conveyer as distinguished from a rigidly mounted roller conveyer.

When the rollers are rigidly mounted, as shown in Figures 9 and 10, each roller will be subjected to an overload, when engaged by the depending portion 33 of the load, because the depending portion would cause the forward end of the load to lift, whereby the rollers positioned under the intermediate portion of the load would likely not engage the load at all, resulting in the relatively few rollers temporarily engaged with the load being severely overloaded. If the depending portion 33 of the load were located substantially at the center of the load, the entire weight of the load might momentarily be imposed on each roller, as the load travels over the conveyer, because of the inability of the rollers to yield when subjected to an overload. In a conveyer having

rigidly mounted rollers, it is also difficult to propel the load over the conveyer, particularly, if the bottom of the load is not reasonably smooth.

In Figure 8, there is shown a conveyer in which the top of one of the rollers, indicated by the numeral **34**, is disposed at an elevation slightly above the tops of the rollers of the conveyer, as indicated by the dotted lines. This may result from various causes as, for example, a new roller may be substituted for a damaged or worn one in a conveyer in which the rollers may have been reduced in diameter, as a result of long, hard usage. In such a case, the uppermost portion of the new roller may project above the upper portions of the other rollers of the conveyer, resulting in a "high spot" in the surface of the conveyer. Variations in the horizontal alinement of the rollers may also result from inaccuracies in manufacture. In conveyers of the type in which the rollers are rigidly mounted, the entire weight of the load may be momentarily imposed upon any or all rollers which are disposed at a relatively higher elevation than adjacent rollers, whereby such rollers may become greatly overloaded, often resulting in bearing failure or damage to the rollers themselves.

In a conveyer in which the rollers mounted upon resilient elements, which elements are pre-compressed to support a load and preferably pre-compressed to a value at least equal to the safe carrying capacity of each roller, a new roller interposed in the conveyer whose uppermost portion may project above the upper portions of the adjacent rollers of the conveyer, will yield when an overload is imposed thereon, whereby the load may pass smoothly over the high roller without shock or without greatly overloading the new roller. When the rollers are rigidly mounted in their supports, any given roller thereof may be subjected to an overload many times greater than that of its intended normal or safe load, and under certain conditions, half the weight of the load, or sometimes even the weight of the entire load may be momentarily imposed thereon, depending upon the nature or character of the load, or the horizontal alinement of the conveyer. This results because of the inability of each roller to yield, when subjected to an overload.

To avoid frequent damage to the rollers of the conveyer in which the rollers are rigidly mounted, it is now common practice to make the rollers relatively larger and heavier, than would otherwise be required, in order that the carrying capacity of each roller will be ample to carry the maximum overload which may be imposed thereon, when a load is transported over the conveyer.

In Figures 9 and 10, I have diagrammatically illustrated conveyers of the type in which the rollers are rigidly mounted. In Figure 9, it will be noted that the load, because of the hump or depending portion **33**, is supported only upon the rollers **35** and **36**, whereby these two rollers must carry the entire weight of the load or 600 pounds each, if the weight of the load is 1200 pounds. Such temporary overloading of the rollers frequently results in damage to the rollers themselves or to their bearings, which may necessitate that the damaged rollers be removed and new ones substituted therefor, resulting in increased maintenance costs and loss of time.

Figure 10 illustrates a conventional conveyer, in which the roller **37** is shown disposed at an elevation slightly above the other rollers of the conveyer, whereby the load is carried entirely by the roller **37** and the roller **38**, when the load is in the position shown in Figure 10. When the load assumes the position indicated by the dotted line **39**, the entire weight of the load may be momentarily supported upon the roller **37**, thereby greatly overloading it, with the result that the roller and its bearings may be permanently damaged.

Overloading of certain rollers of the conveyer, as above described, is completely eliminated in the novel conveyer herein disclosed, primarily because of the rollers being resiliently mounted, whereby they may readily yield to abnormal pressures exerted thereon, as when temporarily overloaded. Under normal operating conditions, the rollers **9** are retained in substantially horizontal alinement by the spring elements **14** and the studs **19**, the latter providing means whereby the uppermost portions of the rollers in a given conveyer may be relatively accurately alined, so that the weight of a load having a normally smooth bottom will be uniformly distributed on all of the rollers engaged by the load.

Also, because of the resilient mounting of the rollers and the relatively accurate alinement of the upper portions thereof, the conveyer may operate as a gravity conveyer, when disposed at a very slight incline or grade, as compared to conveyers of the rigidly mounted roller type which, when used as gravity conveyers, for transporting heavy loads, must, of necessity, be disposed at a relatively greater incline or grade in order that the load may travel thereover uninterruptedly. A load may also be conveyed over the novel conveyer, herein disclosed, with very little effort, even though a portion of the bottom of the load may depend slightly below the bottom surface of the load, primarily, because as said depending portion engages each roller, each roller will yield against the tension of the springs **14**, and independently of adjacent rollers, to thereby permit the load to move forwardly over the conveyor without any material resistance to the traveling movement thereof. The conveyer herein disclosed, may also be used for transporting comparatively light loads, and loads which must be transported from one place to another without shocks and jolts, it being understood that when the conveyer is designed for transporting relatively lighter loads, the pre-compression of the springs **14** may be correspondingly less, than when used for transporting relatively heavier loads.

In the drawings, I have shown the various conveyers as being substantially straight. It is to be understood, however, that a conveyer made in accordance with the invention may be either straight or curved, or it may be inclined downwardly or upwardly, to meet the requirements of each installation. I have also found that by mounting the rollers upon pre-compressed resilient means, as herein disclosed, damage to the conveyer is not likely to occur when placing objects thereon, whether by hand or by an overhead crane, because of the fact that the resilient mountings of the rollers will absorb the load shocks imposed upon the rollers of the conveyer, when a heavy load is roughly placed thereon.

In the appended claims, the term "freely rotatable rollers" is used in its broadest sense to mean that the rollers can rotate freely on their supports at all times irrespective of the weight of the load that is passing thereover, and there are no brakes or other friction means associated therewith to limit free rotation of the rollers at any time.

The term "uniformly distributed" as used in

the specification and claims, means a load supported on the rollers in such manner that each roller of a group which is engaged by the load will bear a substantially equal share of the load. Thus, if the load weighs 1200 pounds, and is supported on suitable skids which engage four rollers, then each roller will carry substantially 300 pounds. The term "uniformly distributed" is used in the claims to define a particular arrangement of the load for the conditions set forth in the claims and is not used to mean that in actual practice all loads passing over the rollers must be uniformly distributed thereon.

A conveyer in which the rollers are resiliently mounted may be operated continually for long periods without repair because of the ability of each roller to yield, when subjected to an overload, whereby the operating and maintenance costs of the conveying system are greatly reduced.

I claim as my invention:

1. In a conveyer for transporting loads, a plurality of resilient roller supports, a plurality of freely rotatable rollers carried by said supports, and means for holding said resilient supports under compression independently of the weight of the roller or load, said means holding each of said supports under a substantial amount of compression and said rollers being arranged to rotate freely irrespective of the weight of the load or the compression of the resilient supports.

2. In a conveyer designed for transporting loads of or below a predetermined maximum weight, a plurality of resilient roller supports, a plurality of freely rotatable rollers rotatably carried by said supports, and means for holding said resilient supports under compression independently of the rollers or load, said means holding each of said resilient supports under a compression of such value that uniformly distributed relatively heavy loads of or below said maximum weight will pass over the conveyer substantially smoothly and said rollers will be freely rotatable at all times irrespective of the amount of the compression of the resilient supports.

3. In a roller conveyer designed for transporting loads of or below a predetermined maximum weight, a plurality of resilient roller supports, a plurality of freely rotatable rollers carried by said supports and arranged to rotate freely irrespective of the weight of the load or the deflection of said supports, and means for holding said resilient supports under compression independently of the rollers or load, said means holding each of the resilient supports under a compression of such value that a uniformly distributed relatively heavy load of or below said maximum weight will pass over the conveyer substantially smoothly.

4. In a roller conveyer designed for transporting loads of or below a predetermined maximum weight, a plurality of resilient roller supports, a roller carried by each of said supports and arranged to rotate freely irrespective of the weight of the load or the deflection of said supports, and means for compressing the resilient supports independently of the weight of the rollers or load, each of said resilient supports being compressed by said means an amount substantially equal to or greater than the force applied by an average uniformly distributed heavy load below said maximum weight which is passing over the conveyer.

5. In a conveyer for transporting loads, a plurality of resilient roller supports pre-compressed an appreciable amount, and a plurality of freely rotatable rollers carried by said supports, the said rollers being arranged to rotate freely irrespective of the weight of the load or the compression of the resilient supports.

6. In a conveyer, a plurality of unit supports arranged end to end to define a conveyer line, a plurality of rollers carried by each of said unit supports, resilient means interposed between said unit supports and the support for the conveyer, and means for holding said unit supports and said resilient means under compression independently of the weight of the roller or load, said means holding each of said unit supports under a substantial amount of compression and said rollers being arranged to rotate freely irrespective of the weight of the load or the compression of the resilient supports.

7. In a conveyer, a plurality of unit supports arranged end to end to define a conveyer line, a plurality of rollers carried by each of said unit supports, resilient means interposed between said unit supports and the support for the conveyer, and means interposed between adjacent unit supports and acting simultaneously thereon for holding said unit supports and said resilient means under compression independently of the weight of the roller or load, said means holding each of said unit supports under a substantial amount of compression and said rollers being arranged to rotate freely irrespective of the weight of the load or the compression of the resilient supports.

8. In a conveyer, a plurality of unit supports arranged end to end to define a conveyer, each of said unit supports comprising a frame having spaced side members, rollers carried by said side members, resilient means interposed between said side members and the support for the conveyer, and means for holding said unit supports and resilient means under compression independently of the weight of the roller or load, said means holding each of said unit supports under a substantial amount of compression and said rollers being arranged to rotate freely irrespective of the weight of the load or compression of the resilient supports.

9. In a conveyer, a plurality of units each comprising spaced side members, a support for said units, rollers mounted between the side members of each unit, spring elements interposed in said side members and the support to yieldably support the side members, and means for holding said spring elements and side members under compression independently of the weight of the rollers and load, said rollers being arranged to rotate freely independent of the weight of the load or the compression of the spring elements and permitting independent vertical movement of each unit when an overload is temporarily imposed thereon.

10. In a conveyer, a plurality of units each comprising spaced side members, a support for said units, rollers carried by the side members of said units, said units being arranged end to end on said support to define a conveyer line, spring elements interposed between said side members and the support to yieldably support the units, and means for pre-compressing said spring elements, said rollers being freely rotatable at all times independent of the weight of the load to be transported.

HUBERT M. RISHEL.