(19) Europäisches Patentamt
European Patent Office
Office européen des brevets

(11) EP 1 847 662 A2

(12) **EUROPEAN PATENT APPLICATION**

(43) Date of publication:
24.10.2007 Bulletin 2007/43

(51) Int Cl.:
E04D 13/147 *(2006.01)*

(21) Application number: **07397010.5**

(22) Date of filing: **17.04.2007**

(84) Designated Contracting States:
AT BE BG CH CY CZ DE DK EE ES FI FR GB GR HU IE IS IT LI LT LU LV MC MT NL PL PT RO SE SI SK TR
Designated Extension States:
AL BA HR MK YU

(30) Priority: **19.04.2006 FI 20060374**

(71) Applicant: **SK Tuote Oy**
65610 Mustasaari (FI)

(72) Inventor: **SAIKKONEN, Eero**
FI-65370, Vaasa (FI)

(74) Representative: **Langenskiöld, Tord Karl Walter**
Oy Jalo Ant-Wuorinen Ab,
Iso-Roobertinkatu 4-6 A
00120 Helsinki (FI)

(54) **Plate for the passage of a pipe through structured roofing material**

(57) The invention relates to a base plate (1) for a passage of a pipe through a roof of structured roofing material, particularly through a roof made of structured roofing elements, comprising a collar surrounding the pipe and a flange to be in contact with the roofing material. The invention is characterized in that the flange is designed to be mounted and fastened underneath the roofing element (10) so that the collar (4) will project out from a hole made in the roofing element (10), and the flange (3) comprises a deformable front portion (5) which is deformable to follow the profile of the roofing element (10), onto which the front portion (5) is mountable.

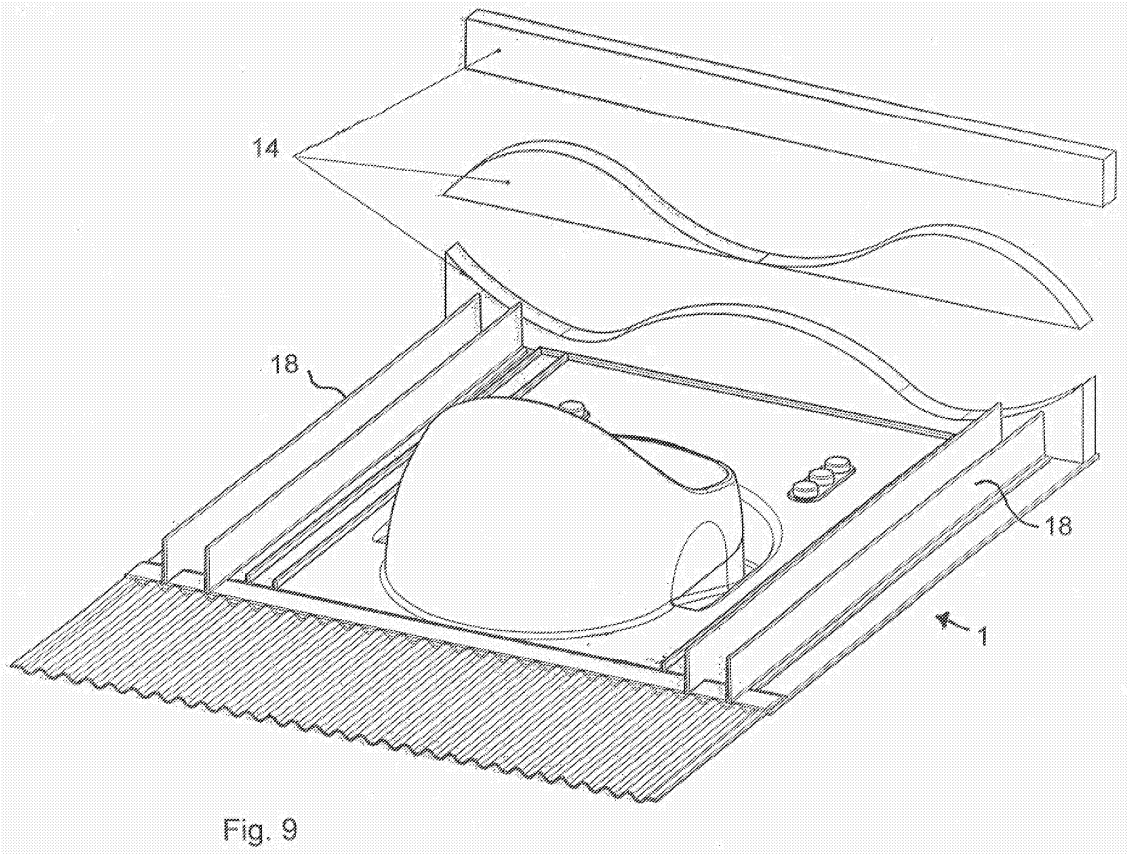

Fig. 9

EP 1 847 662 A2

Description

[0001] This invention relates to a base plate for the passage of a pipe through a roof of structured roofing material, particularly through a roof made of structured roofing elements, comprising a collar surrounding the pipe and a flange to be in contact with the roofing material.

[0002] Previously plates of this kind have been made so that the flange of the plate was designed to be fastened to the upper surface of a roofing material, in which case the whole flange remains visible, impairing thus naturally the exterior features of the roof. Another drawback of the plate to be fastened onto the upper surface of a roofing material is that it is very difficult to tightly fasten its flange to the roofing material, especially if the surface of a roofing material is rough, for instance when coloured scattered sand has been glued with bitumen onto the upper surface of the roofing material.

[0003] In the prior art, these problems have been solved using a plate, a flange of which being designed to be mounted and fastened underneath a roofing element so that only its collar will project from a hole made in the roofing element, and the flange is shaped to follow the profile of the roofing element, the upper surface of the plate being provided with several parallel annular grooves surrounding the collar to receive a sealing material. In this case, the flange remains hidden underneath the roofing material and does not need to be coated in the same manner as the roofing material, resulting in significant cost savings. The base plate is manufactured so that it can be prefastened to the roofing element, i.a. the fastening can be carried out while the roofing element still is on the ground, thus avoiding fastening steps high on the roof.

[0004] An object of the present invention is to further develop passages for structured roofs. This invention is particularly advantageous in buildings having a tile roof. According to the invention, a base plate (passage) essentially consists of two parts: a flange and a collar. The flange is made from two different materials, preferably plastic raw materials and more preferably of hard polypropylene and a soft rubberlike thermoplastic. Preferably, the collar is made from the same hard polypropene as the hard portion of the flange. During casting, these materials are preferably fed into the same mould to achieve a durable joint betweeen the different materials.

[0005] According to a preferred embodiment, the soft front portion comprises a deformable reinforcement element (preferably placed within the thermoplastic rubber), such as an aluminium mesh, the function of which is to improve the shaping so that the creased plastic is prevented from restoring its initial starting position. A sealing material to be placed underneath the creased portion is generally not sufficient to prevent the plastic from restoring its initial position.

[0006] According to another preferred embodiment, a separate fastener has been adapted to the lower edge of the base plate, by means of which fastener the base plate is fixed to the roof structure. Preferably, the fastener is a tube-shaped sleeve with internal long screws supporting and bearing a load possibly resting on the base plate.

[0007] According to another preferred embodiment, replaceable seals are adapted on the upper edge of the base plate. The seals may be fastened to the base plate, for instance, by means of double-sided tape, onto which the seal is adheringly pressed. The shape of the seal to be used depends on the shape of the actual roof tiles.

[0008] The features, advantages and aims of the present invention appear in more detail from the accompanying drawings.

[0009] Fig. 1 shows a base plate according to the invention mounted onto a roof.

[0010] Fig. 2 shows the base plate according to the invention obliquely from above.

[0011] Fig. 3 shows a top view of the base plate according to the invention.

[0012] Fig. 4 shows a side view of the base plate according to the invention.

[0013] Fig. 5 shows a front view of the base plate according to the invention.

[0014] Fig. 6 shows the base plate according to the invention straight from below.

[0015] Fig. 7 shows the base plate according to the invention obliquely from below.

[0016] Fig. 8 shows the base plate according to the invention obliquely from below in a mounted state.

[0017] Fig 9 shows the base plate according to the invention obliquely from above.

[0018] Fig. 1 shows the main components of a base plate 1 according to the invention. The soft, rubberlike portions of the flange are marked by 2. The portion 2 is divided into side edges of the base plate, as well into a rubberlike front portion 5, made of the same soft material. Fig 1 further shows a hard portion of the flange 3 as well as a collar 4, both preferably made of the same material. The soft rubberlike portion 2 and the hard portion 3 of the flange are cast together by means of 2-component casting (reference number 9). The rubberlike front portion 5 of the flange comprises an internally cast stiffening element, preferably made of aluminium. This stiffening element will enable better retention of the shape of the front portion 5 when shaped in conformity with the shape of the actual roof profile. In general, adhesive paste 7 alone will not be sufficient to retain the shape of the front portion 5. When the aluminium stiffening element is in the form of a mesh, it can more easily be deformed, and the holes made in the mesh will allow the rubberlike surface to be evenly spread around the mesh during the casting step.

[0019] Fig. 2 shows a passage according to the invention mounted into position on a roof. The collar 4 of the base plate 1 is arranged to extend above the roofing element 10 and it is fastened to the roof structures in the hard portion 3 of the flange by means of a fastening element 11, preferably by a screw. The rubberlike front portion 5 of the flange is arranged to extend towards the

eaves of the roof and it is shaped onto the roofing element. The rubberlike front portion 5 of the flange is designed to be mounted onto the upper edge of the next lower roofing element to allow water leaking onto the base plate to flow onto the roofing element which lies lower with respect to the ridge of the roof, to prevent water from flowing into the internal roof structures. As can be seen from fig. 2, the wave shapes of the front portion 5 and the roofing element 10 are of different size. When the front portion 5 is densely corrugated after casting and is able to retain its shape due to the reinforcement element, this densely corrugated shape provides the front portion 5 with a sufficiently large area in order to be tightly fitted onto the roofing element 10. After this reshaping step, the reinforcement element adapted to the front portion 5 retains the front portion 5 in the desired shape together with the adhesive paste.

[0020] Fig. 3 shows a vertical top view of the base plate according to the invention. In Fig. 3, a cross section line A-A showing the cross section site of fig. 4 can be seen. On both sides, three alternative positions for the fastening elements 11 are shown. These facilitate the mounting of the base plate exactly according to the spacing of the roof structures.

[0021] Fig. 4 is thus a cross section of the base plate 1 of fig. 3. The collar 4 is mounted inclined relative to the flange to enable vertical orientation of the passage in case of a sloped roof. The rubberlike front portion 5 of the flange comprises a reinforcement element 6, whereby an adhesive paste 7 has been applied to its underside, by means of which the rubberlike front portion can be deformed and fixed to the roofing-material element. Fig. 4 further shows two roof structures 13, to which the base plate 3 is fastened by means of screws 11. Because the spacings between said roof structures are of different width, the underside of the base plate 1 is provided with a sleeve 12 (preferably made of plastic), enabling adjustment of the distance of an angle bar 16 from the roof structure 13 so that the sleeve 12 moves with respect to a fastening support 15 (preferably made of plastic). This allows the screw 11 passing through the sleeve 12 to be embedded sufficiently deep into the roof structure 13, thus making the structure load-bearing. By means of such a structure, in contrast to base plates conventionally designed for fastening to the roofing element itself, the base plate according to the invention can be mounted directly to the roof structures. Thus, the base plate can be mounted to the roof also prior to the mounting of the actual roofing elements (for instance roof tiles). Figure 4 further shows a seal 14.

[0022] Fig. 5 shows a front view of the base plate 1 according to the invention. As shown in the figure, the angle bar 16 is provided with holes 17, through which the base plate 1 is fastened to the roof structure by means of screws. Figures 6 and 7, in turn, show the base plate 1 from below. The adjustability elements shown in connection with figures 3 and 5 are here shown together. The positions 17 of the fastening elements as well as the sleeves 12 enable an exact adjustment of the base plate between the roof structures. The edges of a roofing element are not necessarily always uniform, either (for instance in connection with tiled roofs), so, due to the adjustability of the fastening of the base plate such factors may also be taken into consideration. In principle, by means of these fastening methods, a rougher adjustment can be carried out by means of the positions 17, while the sleeves 12 and the angle bar 16 allow a more exact and stabilizing fine adjustment. Fig. 8 shows a fastening assembly together with the roof structures 13 in more detail. An edge profile 16 is pushed into the roof structure 13. With the help of the fastening support 15, a sleeve 12 and the angle bar 16, the base plate 1 is able to bear the load exerted thereon from above.

[0023] Fig. 9 shows various cellular rubber seals 14. The seals are mounted on the upper edge of the base plate. Because there may be different shapes of tiles, such as single waved, double waved and smooth, various alternatives are shown in the figure. Hence, because there may be several different roof profiles, in connection with the base plate according to the invention, for instance, 5 to 6 differently structured cellular rubber seals may be provided to conform to the shape of the respective roof profile. Hence, a suitable seal is selected to conform to each tile. The base plate is provided with a double-sided tape (not shown), onto which the seal is adheringly pressed. Fig. 9 further shows side shields 18 of the base plate. By means of these shields 18 it is possible to prevent water raining onto the base plate from flowing between the base-plate 2 and the lateral roofing elements into the roof structures, since the roofing element is mounted over the shields 18 to direct the water towards the front portion of the flange.

Claims

1. A base plate (1) for a passage of a pipe through a roof of structured roofing material, particularly through a roof made of structured roofing elements, comprising a collar (4) surrounding the pipe, and a flange (3) to be in contact with the roofing, which flange is designed to be mounted and fastened underneath the roofing element (10) so that the collar (4) will project above the roofing element (10), **characterized in that** the flange (3) comprises a deformable front portion (5), which is deformable to follow the profile of the roofing element (10), onto which roofing element (10) the front portion (5) is mountable.

2. The base plate according to claim 1, **characterized in that** a reinforcement element (6), being able to retain its shape after deformation, has been embedded into the front portion (5).

3. The base plate according to claim 1, **characterized**

in that the reinforcement element (6) is an aluminium mesh.

4. The base plate according to any of claims 1 to 3, **characterized in that** the flange comprises fastening elements (11), by means of which the flange (3) can be adjustably adapted in order to be fastened to roof structures (13).

5. The base plate according to any of claims 1 to 4, **characterized in that** the base plate comprises a cellular-rubber seal fastened to a portion on the side of the roof ridge, the profile of said seal being selected in conformity with the profile of the roofing element.

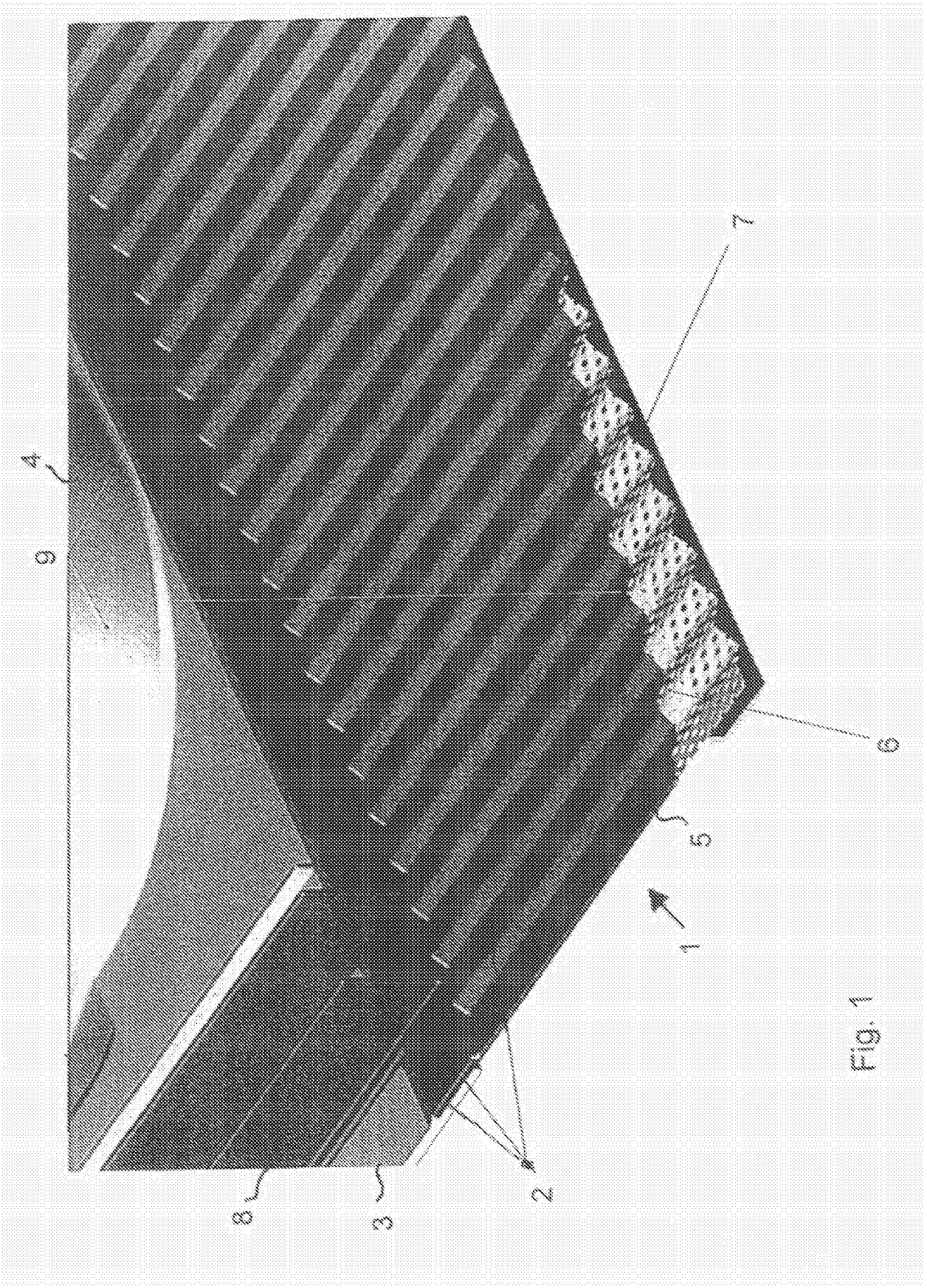

Fig. 1

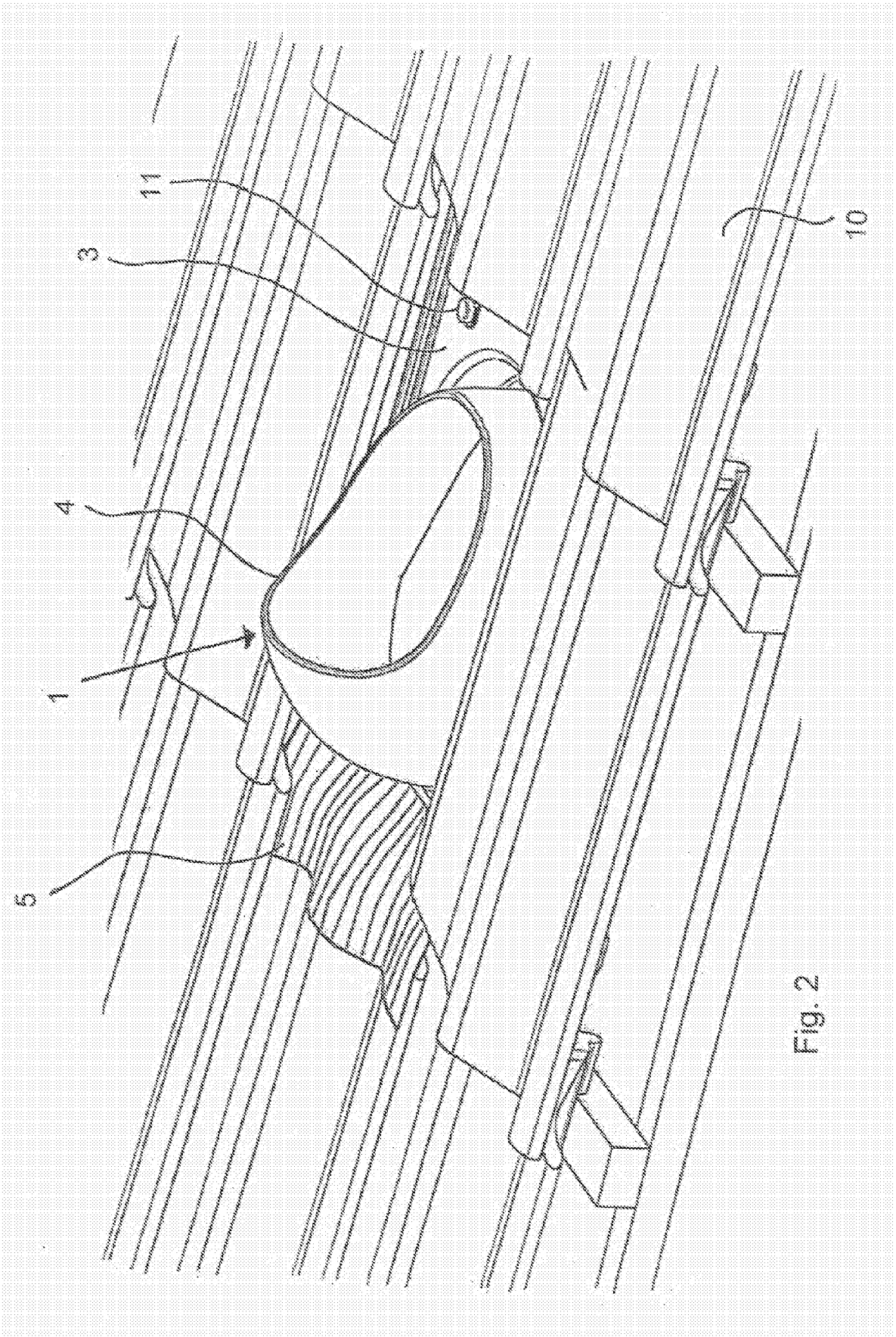

Fig. 2

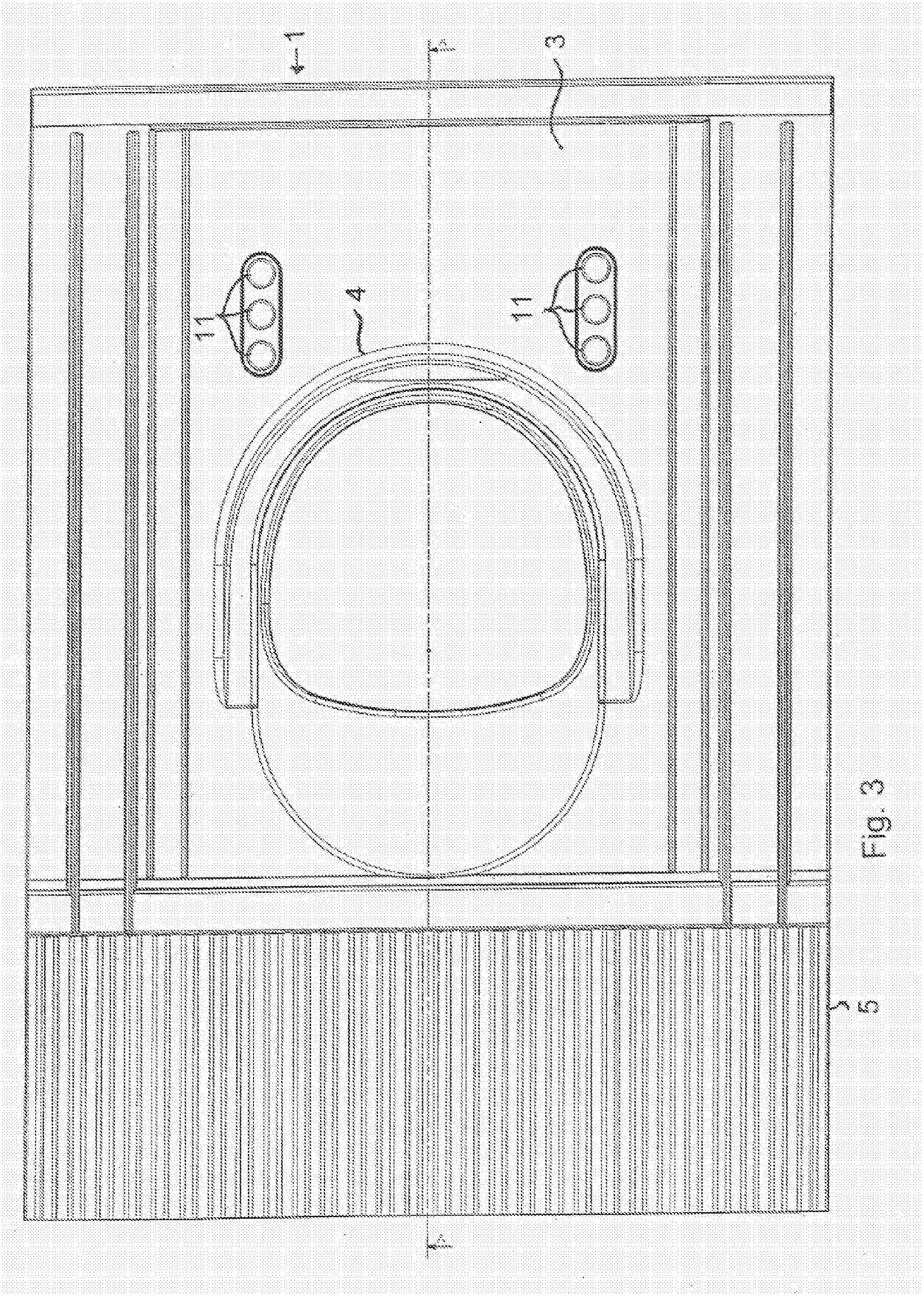

Fig. 3

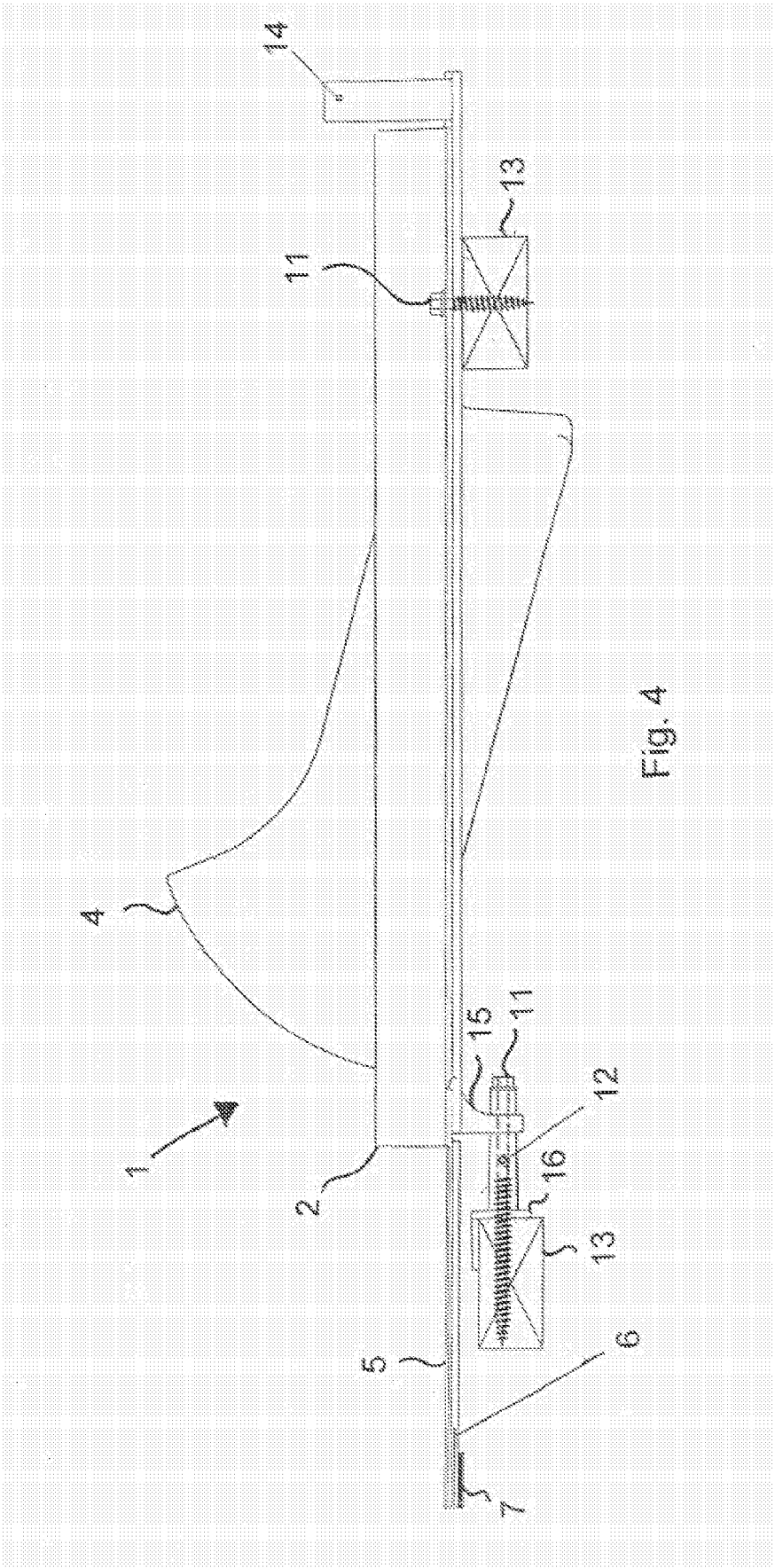

Fig. 4

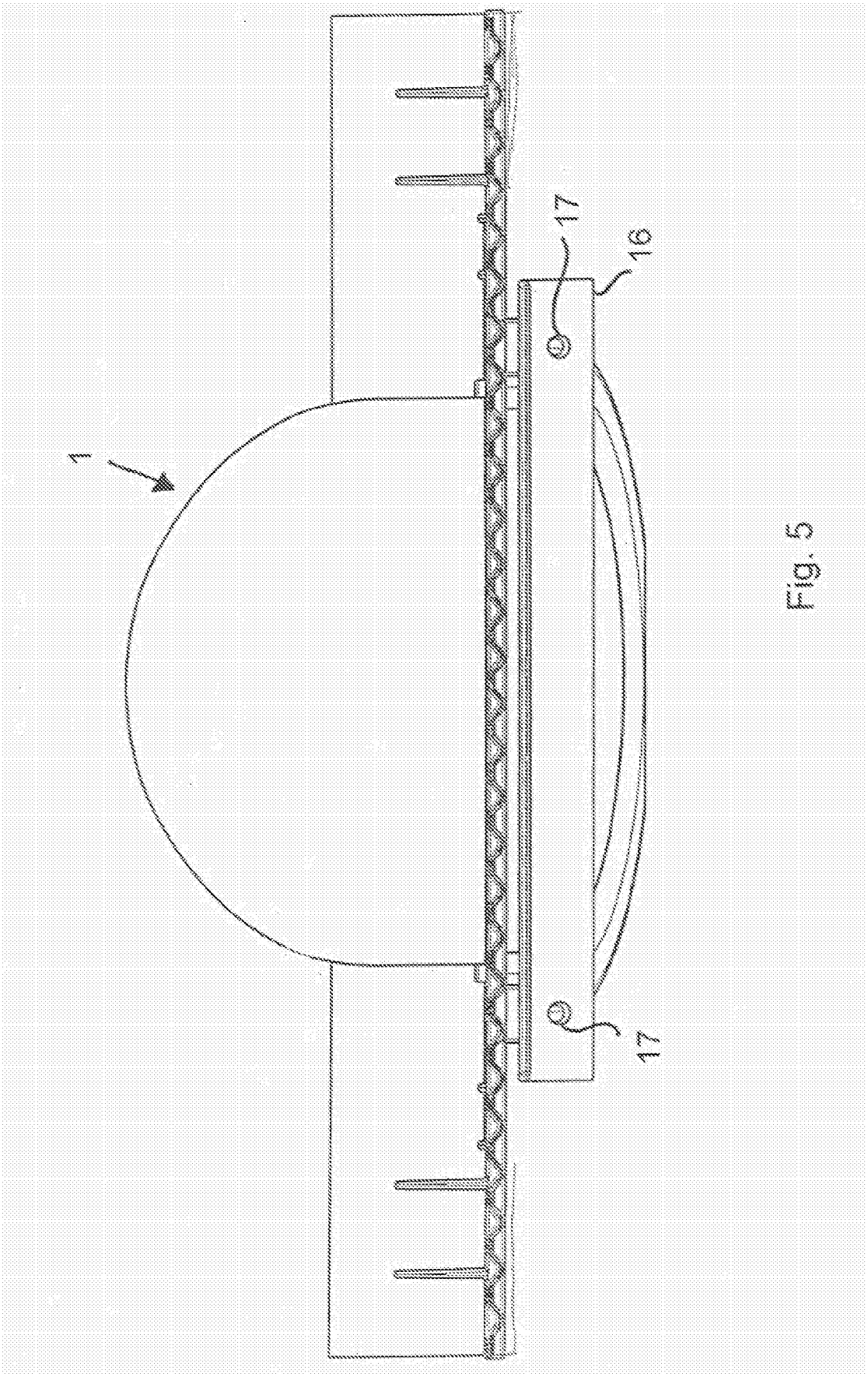

Fig. 5

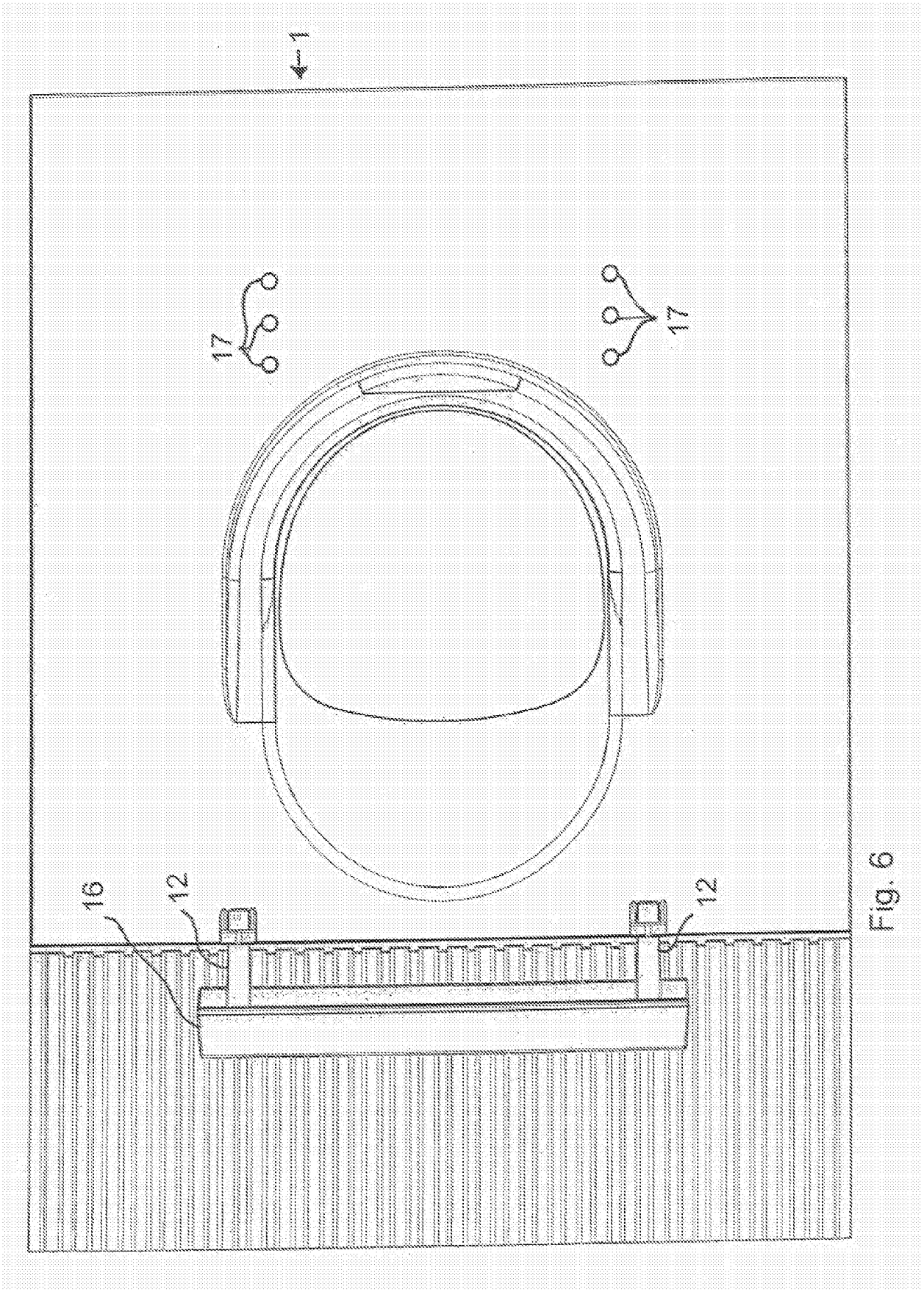

Fig. 6

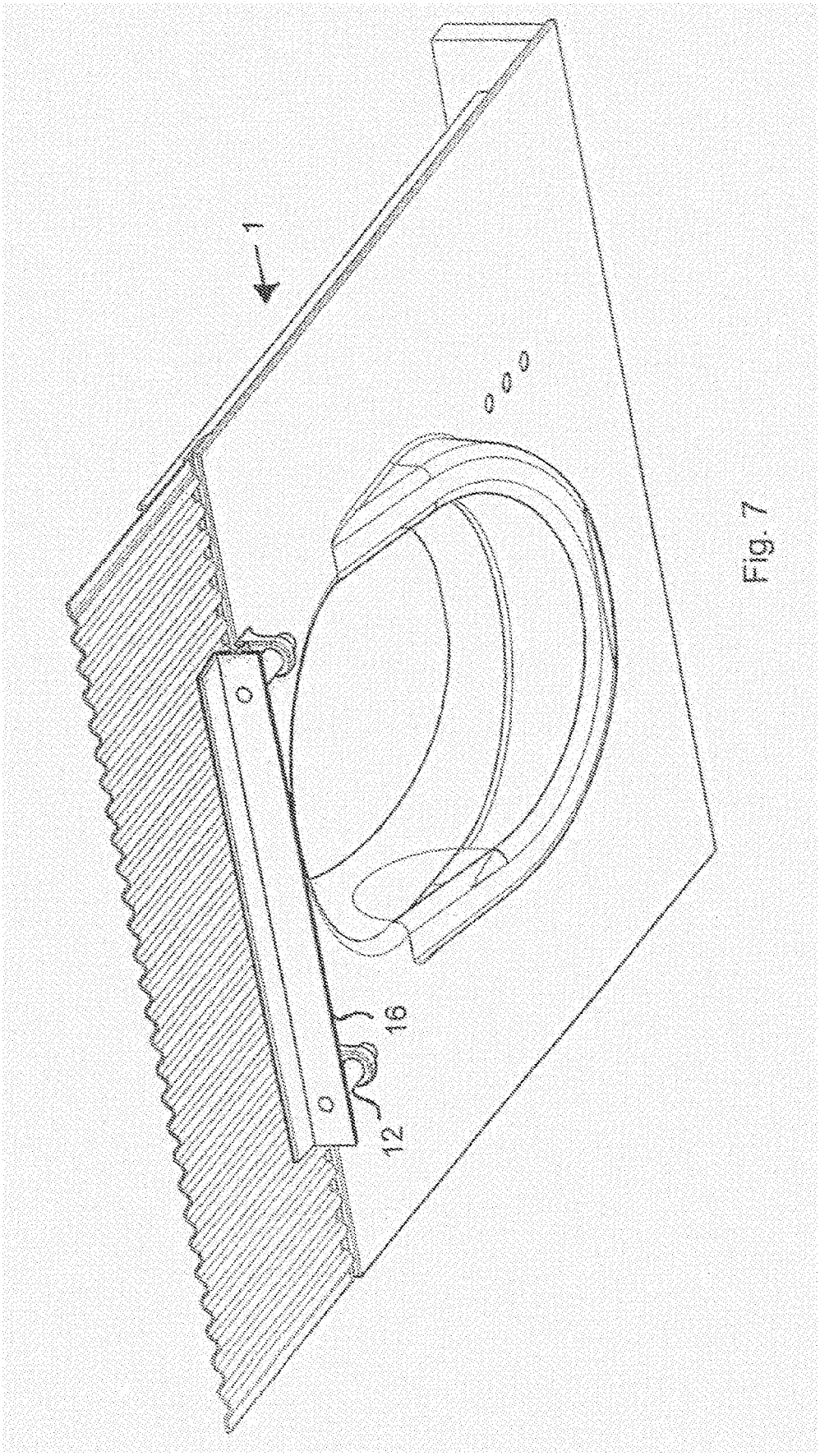

Fig. 7

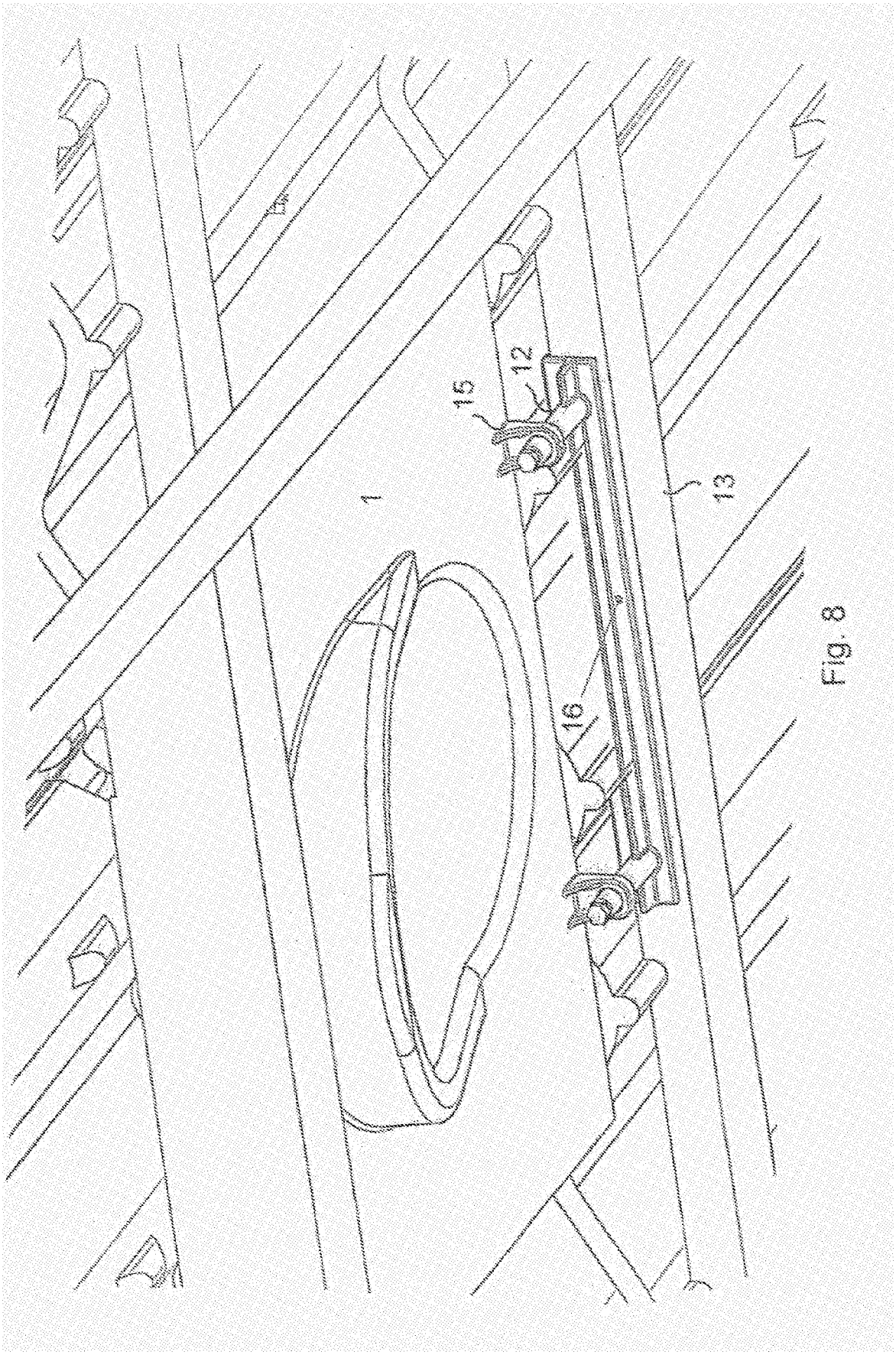

Fig. 8

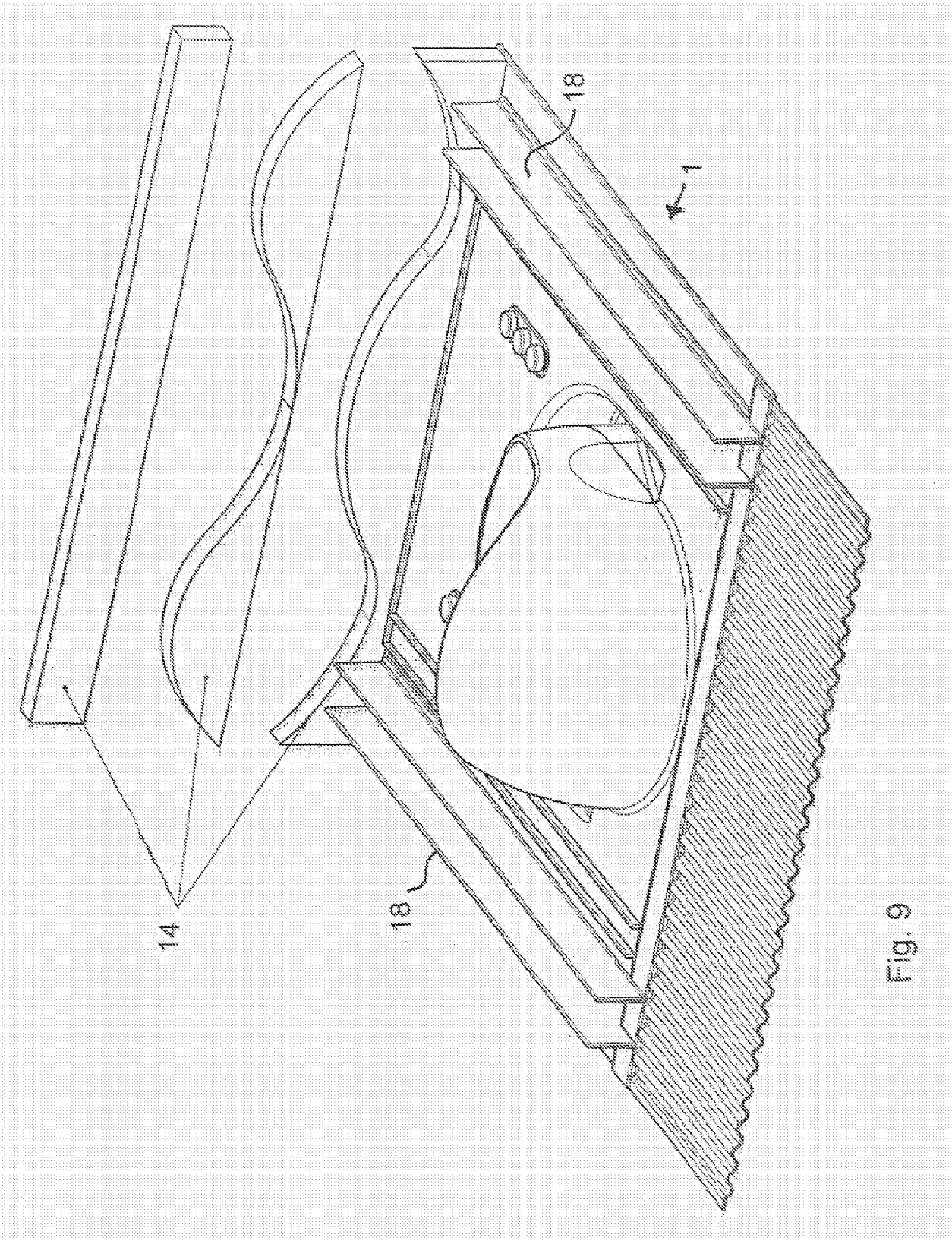

Fig. 9