June 27, 1967 J. W. CHALMERS ETAL 3,327,888

PACKETS FOR CIGARETTES OR THE LIKE

Filed July 23, 1965 3 Sheets-Sheet 1

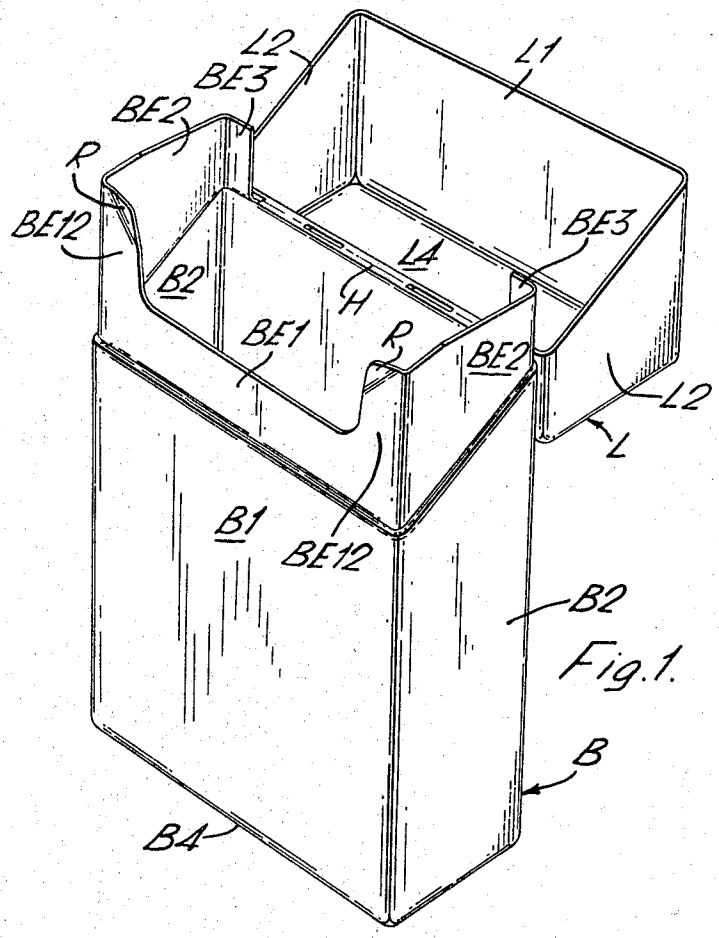

Fig. 1.

Fig. 2.

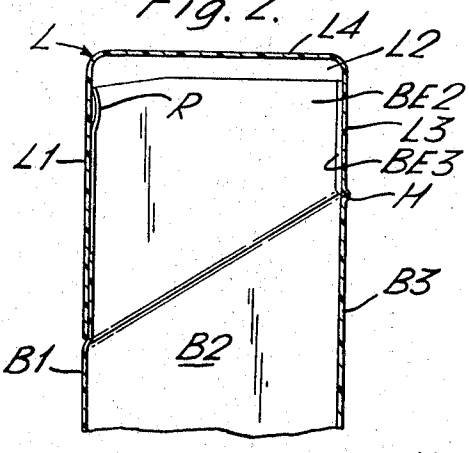

INVENTORS
John W. Chalmers and William A. Roffey
BY
WATSON, COLE, GRINDLE & WATSON
ATTORNEYS

June 27, 1967 J. W. CHALMERS ETAL 3,327,888

PACKETS FOR CIGARETTES OR THE LIKE

Filed July 23, 1965 3 Sheets-Sheet 2

Fig. 3.

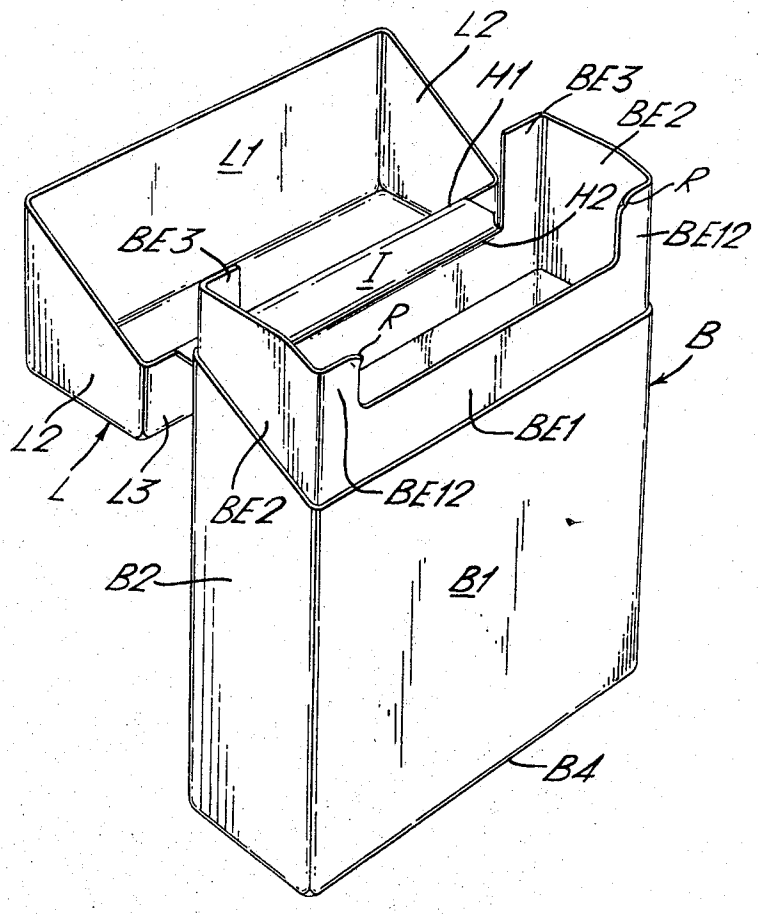

INVENTORS
John W. Chalmers
BY William A. Roffey

Watson, Cole, Grindle + Watson
ATTORNEYS

June 27, 1967 J. W. CHALMERS ETAL 3,327,888

PACKETS FOR CIGARETTES OR THE LIKE

Filed July 23, 1965 3 Sheets-Sheet 3

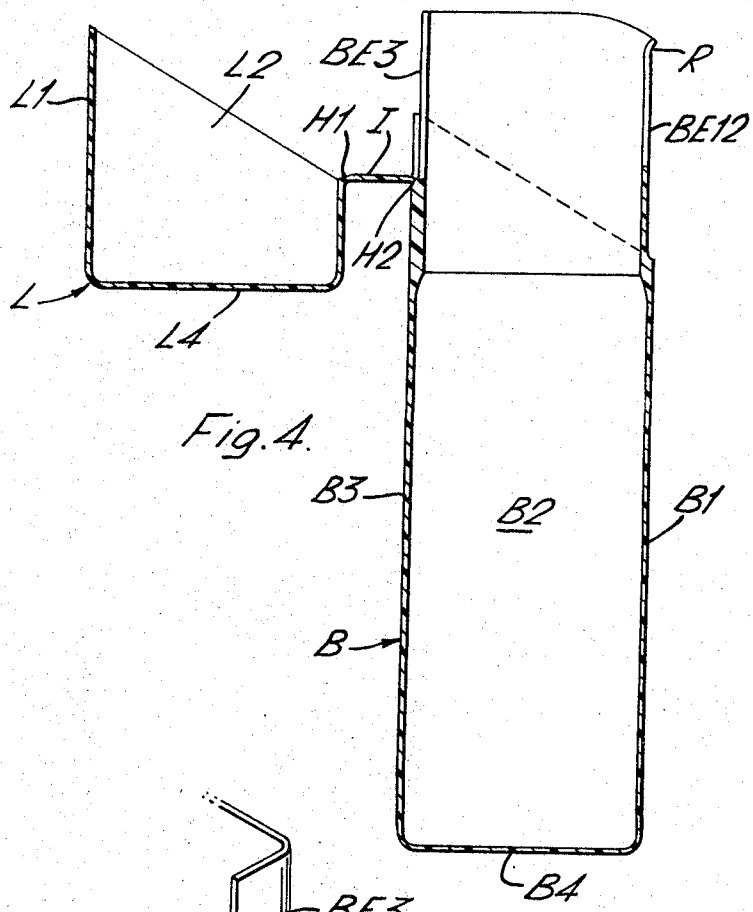

Fig. 4.

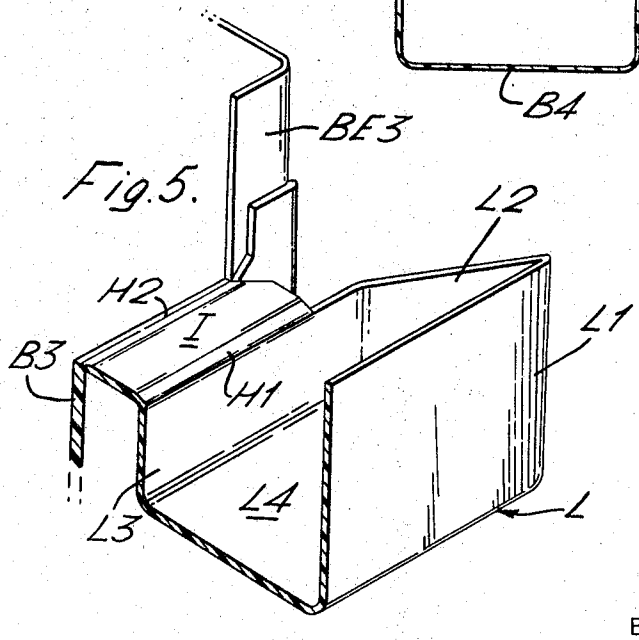

Fig. 5.

INVENTORS
John W. Chalmers
BY William A. Roffey

Watson, Cole, Grindle & Watson
ATTORNEYS

United States Patent Office 3,327,888
Patented June 27, 1967

3,327,888

PACKETS FOR CIGARETTES OR THE LIKE

John Walker Chalmers, Farnborough Park, Kent, and William Arthur Roffey, London, England, assignors to The Molins Organisation Limited, Deptford, London, England, a corporation of Great Britain

Filed July 23, 1965, Ser. No. 474,406
Claims priority, application Great Britain, July 27, 1964, 29,905/64
5 Claims. (Cl. 220—31)

This invention relates to packets for cigarettes or the like and more particularly to packets with integral or permanently attached lids.

For many years the form of cigarette packet which has been most common in the British Isles has been a two-part packet, one part being in the form of a tube or sleeve of rectangular section, the other (often termed the slide) comprising a flat sheet with doubly-folded upturned flanges at each of two opposed edges and so dimensioned as to fit snugly within the sleeve. Access to the cigarettes is obtained by pushing one end of the slide until the flange at the other end is clear of the sleeve, then unfolding such flange to allow withdrawal of individual cigarettes by substantially axial movement.

More recently, there has been adopted a form of packet termed the "hinged-lid" or "flip-flop" packet which, as is suggested by the name quoted, has a lid hinged to the body of the packet. Usually such packets are designed to accommodate twenty cigarettes in three staggered layers, the lid being at one end of the packet so that individual cigarettes may be removed by axial movement. The lid hinge is situated on the back of the packet, a short distance from one end, and the front of the lid extends farther from that end so that the side edges of the lid run obliquely, forming acute angles with the side edges of the front of the lid. The body of the packet has a liner making its sides and front of double thickness and such liner projects into the lid when the packet is closed, the extent of this projection being such that on opening and closing the lid the latter engages and slightly deforms the projecting liner; this protects the packet against inadvertent opening during handling.

Such hinged-lid packets have hitherto been made of thin card, but we now find it of advantage to employ synthetic plastic material (hereinafter termed "plastic") e.g. polypropylene; such material has notable advantages in that packets (including lids) may be made in one piece by moulding and have an excellent strength/weight ratio, and are for all practical purposes completely moisture-tight. However, if hinged-lid packets made of plastic are given exactly the same dimensions as the established card packet, it has been found that excessive force is required to open or close the lid due to the greater strength of the projecting portion equivalent to the liner; while this difficulty may be overcome by slightly reducing the extent to which the liner projects, then the lid has an undesirable degree of freedom when closed.

It is an object of the invention to provide a hinged-lid packet, for cigarettes or the like, which although made of synthetic plastic material is not subject to the above disadvantages.

According to the invention, we provide a one-piece packet for cigarettes or the like, formed of synthetic plastic material and comprising a lid hinged to the end of a body, said lid having a shallow back portion between the hinge and the end face forming part of the lid and a deeper front portion adapted to overlie a projecting part of the front and sides; said projecting part being of less thickness than the remainder of the front and sides of the body so that the outer surfaces of the body and lid are all flush when the packet is closed, in which the front of said projecting part and/or of said lid

has or have at least one deformation outwardly and/or inwardly respectively, such deformation or deformations being so dimensioned as to be displaced by engagement with the lid and/or projecting part respectively when the lid is fully closed and so disposed that reaction forces due to such displacement exert a torque on said lid in a closing direction.

In a preferred form, the projecting part of the front of the body comprises a prolongation of said front, with side flanges constituting prolongations of the forward parts of the sides of the body, and having a substantially rectangular recess in its upper edge (to allow finger access to cigarettes or the like within the packet upon opening thereof). The said projecting part accordingly has unbraced corners at each side of said recess and we prefer in such a packet to provide the deformation by bending the said corners forward. In this form of packet, the projecting part must extend upwardly (considering the end face included in the lid as the top of the packet) a sufficient distance to bring the said corners to a higher level than the hinge; then when the lid is in the closed position, displacing the deformation, the latter apply to the inside of the front face of the lid forces which act on substantially horizontal lines passing above the hinge and hence tend to turn the lid in a closing direction, i.e. hold the lid closed.

The hinge may be simple single hinge, provided by an integral part of the rear wall of the packet; more specifically, in this form of packet the rear wall is integral with adjoining side walls of the body up to a selected horizontal line and integral with adjoining side walls of the lid above said line, so that above and below said line the side walls stiffen said rear wall against deformation but the portions of rear wall above and below said line may adopt different angular positions as bending on said line is possible.

We prefer however to provide a double hinge; the rear wall of a packet so constituted has three portions, the highest and lowest portions being integral with adjoining side walls of the lid and body respectively as before. The third or intermediate portion however has hinge connections to said highest and lowest portions but it is otherwise completely free; said hinge connections are at parallel opposed edge portions of said third or intermediate portion, and it is desirable that the hinge connection to the highest portion (i.e. between the intermediate portion and the lid) should be considerably weaker than the hinge connection to the lowest portion (i.e. between the intermediate portion and the body).

In order that the invention may be well understood, preferred embodiments thereof will now be described with reference to the accompanying drawings, in which:

FIGURE 1 is a perspective view of one form of polypropylene packet embodying the invention;

FIGURE 2 is a partial side view, in section, of the packet of FIGURE 1;

FIGURE 3 is a perspective view of another form of polypropylene packet embodying the invention;

FIGURE 4 is a side view, in section of the packet of FIGURE 3; and

FIGURE 5 is a perspective view of a part of the packet of FIGURES 3 and 4.

First referring to FIGURES 1 and 2 the packet there-shown has a body B with a front B1, sides B2, a back B3 and a bottom B4. Hinged to said body B, as indicated at H, is a lid L having, correspondingly a front L1, sides L2, a back L3 and a top L4. A hinge H connects the back L3 of the lid to the back B3 of the body, said hinges being parallel to the top and bottom of the packet. The free edge of the front L1 of the lid is also parallel to the top and bottom of the packet, but the free edges of the sides slope upwardly towards the back of the packet,

the back L3 of the lid being of less depth than the front L1 of the lid.

The front and sides of the body have upward extensions respectively indicated by references BE1 and BE2, said extensions being of less thickness than the remainder of the body B but having their inner surfaces flush with those of the front and sides respectively so that the said extensions are externally recessed. When the lid is closed, the front L1 and sides L2 thereof lie in the recesses so provided, so that the external surfaces of the lid are flush with those of the body.

The front body extension BE1 is centrally cut away to have a shallow central portion and deeper end portions BE12, the latter being integral with and forming stiffening flanges for the side body extensions BE2. The side body extensions BE2 have corresponding stiffening flanges at the back, provided by extensions BE3 of the back B3 of the body.

From a consideration of FIGURE 2, it will be appreciated that, whenever the lid is moved between its open (FIG. 1) and closed (FIG. 2) positions the side body extensions BE2 and front body extension portions BE12 are necessarily temporarily deformed slightly by inward displacement, also the parts of the lid engaged by such extensions are slightly deformed outwardly. Because of the considerable mechanical strength of polypropylene, it is necessary so to select the dimensions of the extensions, relative to the remainder of the packet, that such deformation is relatively slight. To avoid the lid having an undesirable freedom or floppiness when closed, the front body extension portions BE12 are bent outwardly at their upper medial corners to provide retaining lugs R; the degree of outward bending is so chosen that when the packet is closed, the inner surface of the front L1 of the lid holds said lugs R at positions slightly further inward than the positions they assume when unconfined, so that said lugs exert an outward force against the inside of the front L1 of the lid. As the said lugs R are nearer the top of the packet than is the hinge, this outward force produces a torque on the lid in the closing direction, preventing the aforesaid floppiness.

The packet shown in FIGURES 3 to 5 is generally similar to that of FIGURES 1 and 2, as indicated by the application of the same references to corresponding parts, and the foregoing description also applies to the packet of FIGURES 3 to 5 and will not be repeated. However, the packet of FIGURES 3 to 5 has a modified hinge arrangement which will now be described.

The back of the packet of FIGURES 3 to 5 has three parts instead of two, as between the back L3 of the lid and the back B3 of the body we provide a third or intermediate part I. The part I is connected by parallel hinges H1, H2 to the lid and body respectively. Both said hinges are formed by flexible strip material, preferably integral with the adjoining parts L3, B3 but the hinge H1 is weaker than the hinge H2. The hinge H2 is shorter than hinge H1, i.e. the bottom edge of part I is shorter than its top edge, but the free edge of extensions BE3 of the back of the body have medial edges in alignment with the ends of the hinge H2, so that end portions of the intermediate part I overlap the extensions BE3 to ensure effective sealing of the packet in the hinge region.

The double hinge arrangement of the packet of FIGURES 3 to 5 provides a compromise between the conflicting requirements of ease of opening or closing and sufficient access to the cigarettes in the packet, when open. It will be apparent from FIGURES 2 and 4 that in packets

of this general type that the higher the hinge is placed, relative to the body extension, the less deformation of said extension and/or of the lid is required to permit the lid to move between its open and closed positions; however, a high hinge position necessarily means a shallow lid and hence less exposure of the contents of the packet when the lid is open. With the packet of FIGURES 3 to 5, when opening of the packet commences, the hinge H1 first comes into play as it is weaker; as hinge H1 is placed relatively high on the packet, opening is easy for the reason mentioned above. However, in the final stages of opening the hinge H2 is also operated so that in the fully-open position good access to the contents of the packet is provided, as seen in FIGURE 5.

With the double hinge arrangement of the packet of FIGURES 3–5, the lugs R are still at a higher level than either of the hinges H1, H2 and therefore when the lid is in the closed position said lugs still apply a torque to the lid in a closing direction as previously explained.

It will be appreciated from the above description that the invention provides a material improvement in packets of the hinged-lid or flip-top type. The scope of the invention is not limited to the specific examples described, in which various changes or modifications may be made without discarding the essential features of the invention.

What we claim as our invention and desire to secure by Letters Patent is:

1. A one-piece packet of synthetic plastic material for articles such as cigarettes, comprising a body having a front, two sides, a back and an end face, and a part projecting from the front and sides, a lid having a shallow back portion, a deeper front portion, sides connecting the front and back portions, and an end face, a hinge connecting the back portion of the lid to the back of the body so as to permit the lid to be closed over the projecting part of the body, said projecting part being of less thickness than the rest of the body so that the outer surfaces of the body and lid are all flush when the packet is closed, in which there is at least one deformation so dimensioned as to be displaced as the lid engages the projecting part when the packet is fully closed and so disposed that reaction forces due to such displacement exert a torque on said lid in a closing direction.

2. A packet as claimed in claim 1 having at least one deformation in the projecting part of the body.

3. A packet as claimed in claim 2 in which the front of said projecting part has corners defined by a substantially rectangular recess in said front, said corners being bent outwardly, and the projecting part extending upwardly a sufficient distance to bring said corners, to a higher level than the hinge.

4. A packet as claimed in claim 1 in which, the hinge is an integral part of the rear wall of the packet.

5. A pocket as claimed in claim 4 in which the rear wall is integral with adjoining side walls of the body up to a selected horizontal line and integral with adjoining side walls of the lid above said line.

References Cited

UNITED STATES PATENTS

3,099,382	7/1963	Talbert	229—44
3,167,104	1/1965	Wiley et al.	150—.5
3,173,600	3/1965	Michalka	229—44

THERON E. CONDON, *Primary Examiner.*

G. T. HALL, *Assistant Examiner.*