United States Patent

Snyder

[15] **3,646,890**

[45] **Mar. 7, 1972**

[54] MEANS FOR CONTROLLING AUTOMATICALLY MOVED VEHICLE

[72] Inventor: **James H. Snyder,** Battle Creek, Mich.

[73] Assignee: **Clark Equipment Company**

[22] Filed: **Nov. 28, 1969**

[21] Appl. No.: **880,582**

[52] **U.S. Cl.**.....**104/1,** 214/16.42, 235/150.2, 318/603

[51] **Int. Cl.**.....**G05b 19/00**

[58] **Field of Search**.....214/16.42; 307/231; 328/48, 328/49; 104/88; 318/601, 603; 235/150.2, 24

[56] **References Cited**

UNITED STATES PATENTS

3,531,705	9/1970	Rosin et al.	214/16.4 A X
2,988,237	5/1961	Devol, Jr.	214/16.42 X
3,188,572	6/1965	Bell	328/48 X
3,490,616	1/1970	Castaldi	214/16.42
3,495,775	2/1970	Di Camillo	318/601 X

Primary Examiner—Arthur L. La Point
Assistant Examiner—George H. Libman
Attorney—Kenneth C. Witt, John C. Wiessler, Robert H. Johnson and Reginald J. Falkowski

[57] **ABSTRACT**

A material unit handling and storage system has a stacking vehicle movable within an aisle between loading stations at each column of bins. The location of the vehicle within the aisle is sensed by a group of magnetically activated switches on the vehicle that respond to coded magnetic strips placed adjacent each station. A pulse clock and pulse counter system provide correlated pulses and information on the location of the vehicle and the selected destination for the vehicle is stored in count coincident detectors that produce an output upon the occurrence of the pulses corresponding to the location and destination. The difference in time of the occurrence of the pulses provides information to a driving control means that moves the vehicle in the desired direction at high, intermediate and low speeds as it nears its destination and at a fine positioning speed when it arrives at its destination.

31 Claims, 6 Drawing Figures

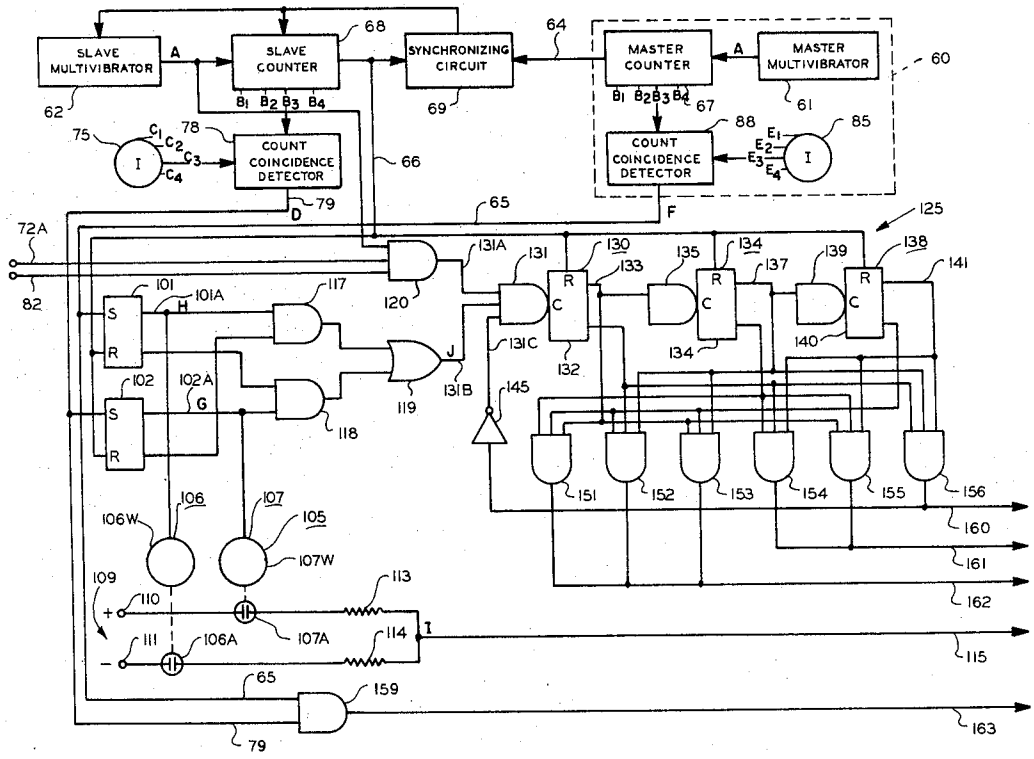

FIG. 2

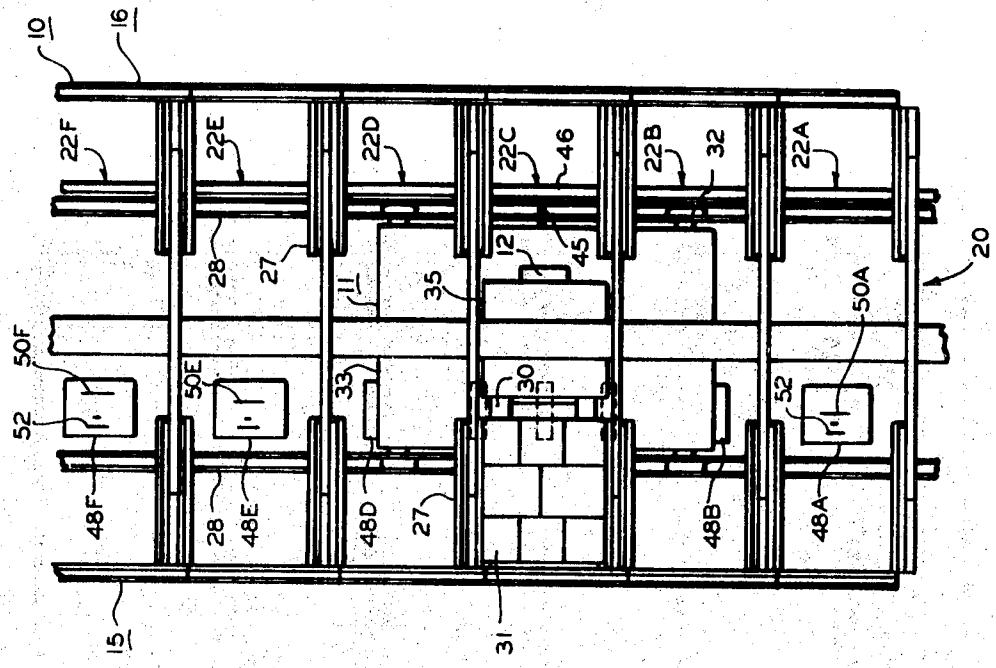

FIG. 1

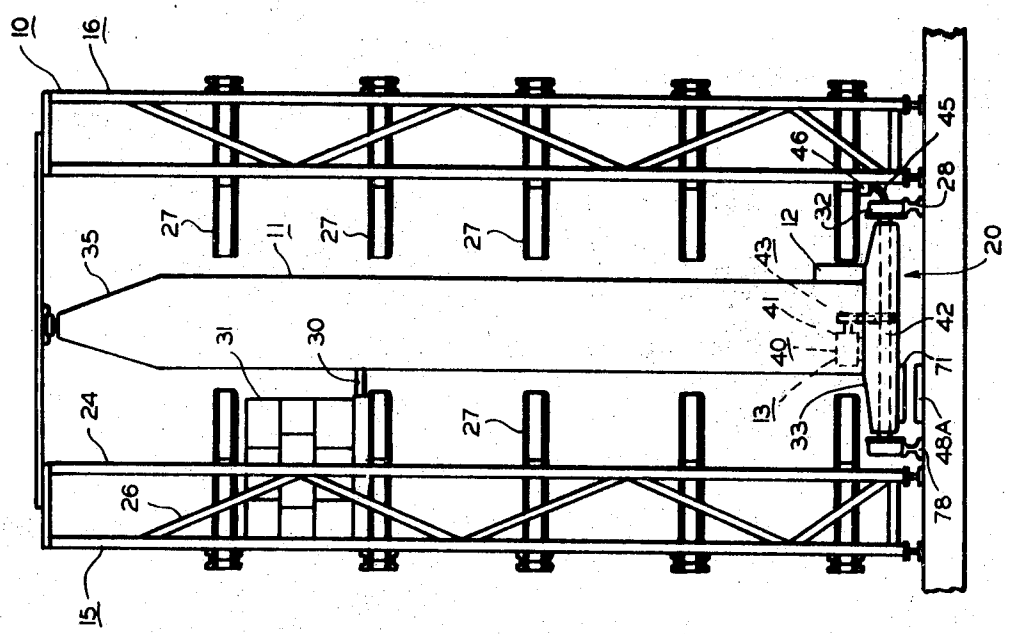

INVENTOR
JAMES H. SNYDER
BY R J Falkowski
ATTORNEY

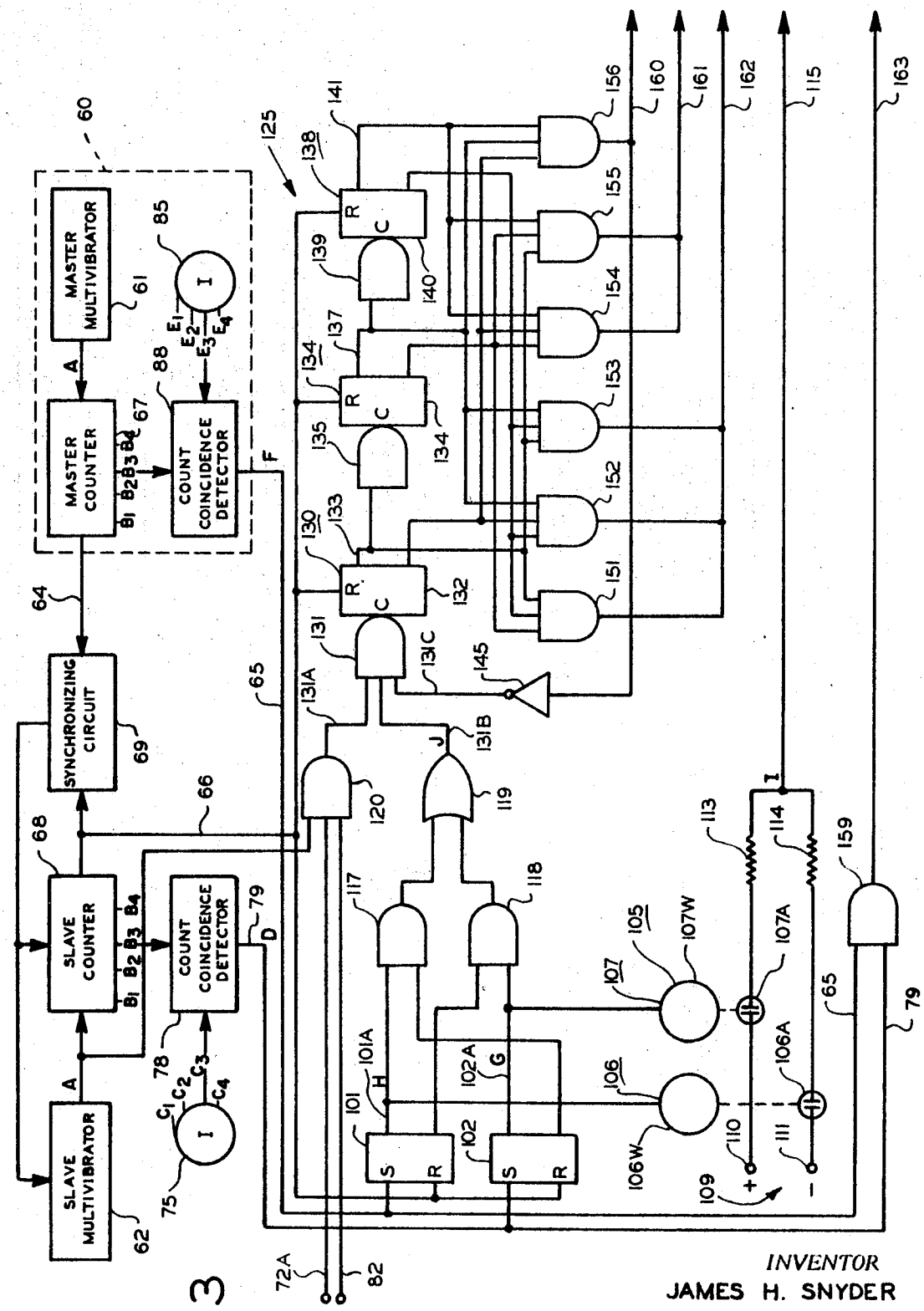

FIG. 3

INVENTOR
JAMES H. SNYDER
BY R J Falbourski
ATTORNEY

FIG. 4

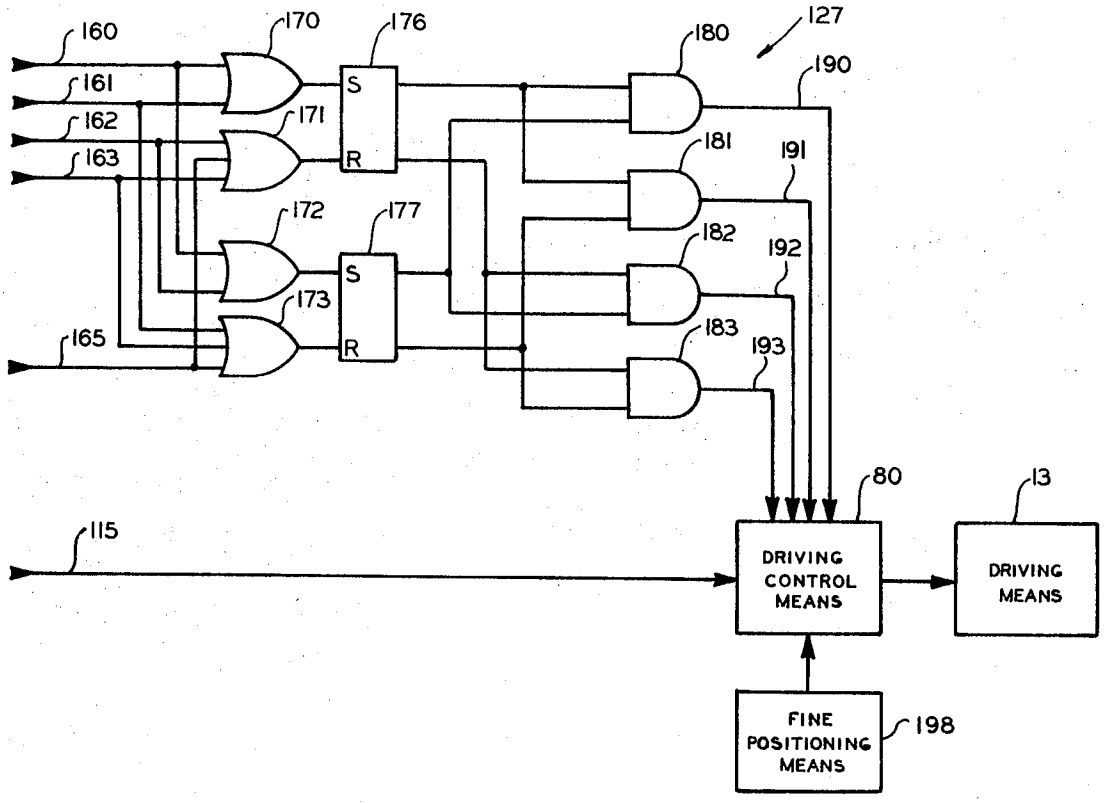

FIG. 5

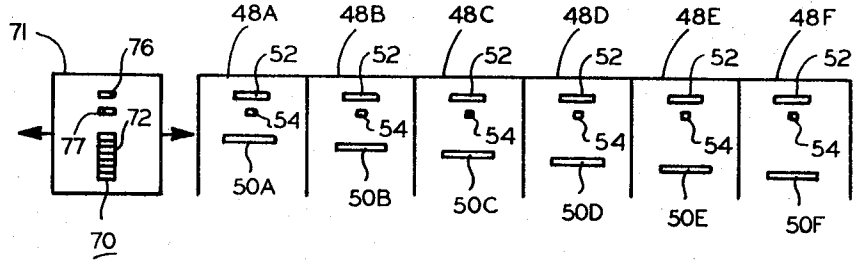

INVENTOR
JAMES H. SNYDER
BY R J Falbowski
ATTORNEY

FIG. 6

SIGNAL	1	2	3	4	5	6	7	8	9	10	11	12	13	14	15	16
A																
B_1	1	0	1	0	1	0	1	0	1	0	1	0	1	0	1	0
B_2	0	1	1	0	0	1	1	0	0	1	1	0	0	1	1	0
B_3	0	0	0	1	1	1	1	0	0	0	0	1	1	1	1	0
B_4	0	0	0	0	0	0	0	1	1	1	1	1	1	1	1	0
C_1	0	0	0	0	0	0	0	0	0	0	0	0	0	0	0	0
C_2	0	0	0	0	0	0	0	0	0	0	0	0	0	0	0	0
C_3	1	1	1	1	1	1	1	1	1	1	1	1	1	1	1	1
C_4	0	0	0	0	0	0	0	0	0	0	0	0	0	0	0	0
D	0	0	0	1	0	0	0	0	0	0	0	0	0	0	0	0
E_1	0	0	0	0	0	0	0	0	0	0	0	0	0	0	0	0
E_2	0	0	0	0	0	0	0	0	0	0	0	0	0	0	0	0
E_3	0	0	0	0	0	0	0	0	0	0	0	0	0	0	0	0
E_4	1	1	1	1	1	1	1	1	1	1	1	1	1	1	1	1
F	0	0	0	0	0	0	0	1	0	0	0	0	0	0	0	0
G	0	0	0	1	1	1	1	1	1	1	1	1	1	1	1	1
H	0	0	0	0	0	0	0	1	1	1	1	1	1	1	1	1
I	0	0	0	+1	+1	+1	+1	+1	+1	+1	+1	+1	+1	+1	+1	+1
J	0	0	0	1	1	1	1	0	0	0	0	0	0	0	0	0

INVENTOR
JAMES H. SNYDER
BY Lewis J. Lamm
ATTORNEY

MEANS FOR CONTROLLING AUTOMATICALLY MOVED VEHICLE

This invention relates to control systems for vehicles automatically movable to selected destinations, particularly to control systems for material handling vehicles in material unit handling and storage systems.

In material handling and storage systems that store material units in bins arranged in columns and rows, stacking vehicles that travel on tracks within the aisle between the columns of bins are often used to transfer material units into and out of the bins. The stacking vehicle typically has an elevator with a laterally movable platform adapted to pick up and deposit individual material units in the bins and at the receiving and depositing home station. A vehicle position sensing system of some type provides information for controlling movement of the vehicle within the aisle and may use electrical, mechanical magnetic or other sensing devices on the vehicle that sense coded signal devices located adjacent corresponding bin column locations.

With this invention, a vehicle control system is provided that enables moving the vehicle at various speeds between stations and that provides for automatically maintaining positive control of the vehicle and information of its location and destination at all times. The system continually keeps track of the location of the vehicle and its destination and is moved at a speed depending on its distance from its destination. The system uses a remote control arrangement having a simple data link between the stationary and the movable portion of the system.

Objects and advantages of this invention will be apparent from the following detailed description.

FIG. 1 is a simplified end view of a material unit handling and storage system embodying this invention having a load storage structure and a stacking vehicle movable within the aisle formed by the storage structure;

FIG. 2 is a top view of a portion of the system shown in FIG. 1 more clearly showing the location of sensing device groups according to this invention;

FIG. 3 is a schematic drawing of a portion of the logic control system for controlling the movement of the vehicle;

FIG. 4 is a schematic drawing of another portion of the logic control system; and

FIG. 5 is a schematic representation of the relationship of the sensing devices on the stacking vehicle and the coded magnetic strips at the bin locations or stations.

FIG. 6 is a time sequence showing of the output of the multivibrator, the counters, and certain of the logic elements.

Referring to FIGS. 1 and 2, a material unit storage and handling system comprises a load storage structure 10, a stacking vehicle 11, a driving means 13 for moving the stacking vehicle, and a means for controlling the driving means as shown in all the figures. Load storage structure 10 comprises bin assemblies, such as a bin assembly 15 and a bin assembly 16, forming an aisle 20 and bin columns or loading stations 22A through 22F. Bin assemblies 15 and 16 are similarly constructed with vertical support posts 24 and lattice 26 strenghtening and supporting the vertical posts and with horizontal beams 27 forming the base of each of the bins for receiving the material units. Stacking vehicle 11 is movable to plurality of stations 22A through 22F along a selected path defined by aisle 20 and tracks 28 and has a vertically and laterally movable elevator 30 adapted to move material units, such as a material unit 31, into and out of the bins formed by bin assemblies 15 and 16. Stacking vehicle 11 rides within aisle 26 on wheels 32 and tracks 28 and has a base structure 33 and a superstructure 35 for carrying elevator 30.

The driving means for moving the stacking vehicle may be of any known type and may comprise a drive assembly 40, shown in simplified form, having a motor 41 mounted on base structure 33 of the vehicle and connected to drive an axle 42 and wheels 32 over tracks 28 through a power coupling assembly 43. Power for motor 41 is obtained from an electrical power source (not shown) through a connecting device 45 connected to the power source through a connecting channel 46 in any known manner.

The means for controlling the driving means comprises a designation means for producing a unique designation signal for each respective station, a pulse means for producing groups of pulses, a location means for producing vehicle location signal pulses, a destination means for producing destination signal pulses, and a control means for controlling the driving means to move the vehicle in a selected direction.

The designation means comprises a signal device at each station, such as coded magnetic assemblies or devices 48A through 48F, as schematically shown in FIG. 5 and partially shown in FIG. 2, each adjacent a respective station and each producing a unique designation signal correlated to the respective adjacent bin columns or station. Each of coded devices 48A through 48F comprises a location coded magnetic strip such as magnetic strips 50A through 50F that correlate to adjacent stations 22A through 22F, respectively, as shown in FIGS. 2 and 5, strobe magnets 52, one at each station, that are used to indicate that the vehicle is at a station and that location information is available, and centering magnets 54, one at each station, that are part of a fine positioning means for stopping the vehicle accurately at its destination.

Referring to FIG. 3, the pulse means comprises a pulse generator means for producing a continuous series of pulses and a counting means for producing the defined groups of pulses by grouping the pulse generator means pulses. The number of pulses in each defined group is equal to or greater than the number of vehicle stations so that there is a pulse for every station. Therefore, at least some of the pulses each respectively correspond to a respective station.

The pulse generator means may comprise multivibrators 61 and 62, with a remote control center, designated by dotted block 60, with multivibrator 61 as a master pulsing device, and multivibrator 62 as a slave pulsing device. Remote control center 60 would typically be stationary with most of the rest of the system as shown located on the vehicle to enable the use of only two data links along conductors 64 and 65. The system components are placed at convenient places on the vehicle as in a cabinet 12 as shown in FIGS. 1 and 2, with appropriate conductors (not shown) to the various parts of the control system, and to connecting device 45. Data link conductors 64 and 65 carry information coupled along with power through connecting device 45 and connecting channel 46. The pulses from multivibrators 61 and 62 are respectively applied to the counting means that comprises a master counter 67 and a slave counter 68 which receive the pulses and define the pulses as groups that are correlated by sequence of occurrence to the sequence of position of the stations in any known manner, typically with a digital unit counter and a periodic starting pulse when a counter is "filled."

The outputs of the counters are applied to a synchronizing circuit 69 of any known type that compares the phase relationship of the pulses and the starting pulse to control slave counter 67 and possibly slave multivibrator 61 to insure synchronization at the start of each group of pulses and for the pulses of both counters. A single multivibrator and a single counter can be used if a simple data link is not desired.

The location means comprises a location sensing means for producing a vehicle location signal and a location indicating means for producing the location signal pulses upon the occurrence of the counter output pulse corresponding to the station at which the vehicle is located. The location sensing means includes a switch group 70 mounted on switch assembly 71 on vehicle 11, as shown in FIGS. 1 and 5, that is in a position to respond to the magnetic coded signals of the designation means as the vehicle moves along its path. Switch group 70 comprises reed switches 72 or similar devices responsive to the magnetic signals to selectively close in response to the coded magnets 50A through 50F to produce a signal indicating the vehicle location. The information from switches 72 is manipulated in any known manner to provide an appropriate input signal 75 (FIG. 3). A reed switch 76

responds to strobe magnets **52** to provide an input for a logic control circuit along line **72A**.

The location indicating means comprises a count coincidence detector **78** that receives the input signal from input **75** and produces an output along line **79**. Coincidence detector **78** is a device of any known type that produces a digital signal at the particular pulse in a group of pulses that in this embodiment corresponds to the appropriately coded input signal pulse indicating the vehicle location. The location indicating means and the location sensing means, therefore, respond to the designation devices at the station at which the vehicle is located either while moving or not moving, to produce the vehicle location signal that indicates the location of the vehicle. The location signal is correlated to the counting means output in count coincidence detector **78** to produce the location signal pulse upon the occurrence of the counter output pulse corresponding to the station indicated by the vehicle location signal.

Similarly, the destination means comprises a means for producing a destination signal that includes an input, shown diagrammatically as input **85**, for indicating the selected vehicle destination from punch processing card systems, manipulation of switches, or other similar known devices; and a destination indicating means that includes a count coincidence detector **88** that receives the groups of pulses from counter **67** and produces a digital signal at the pulse corresponding to the selected destination in the same manner as the location means. Coincidence detector **88** produces the destination signal pulse upon the occurrence of the output pulse corresponding to the station selected as the vehicle destination along line **65**.

Accordingly, the location signal pulse from coincidence detector **78** is applied along line **79** and the destination signal pulse from coincidence detector **88** is applied along line **65** to the control means. The control means comprises a driving control means **80** (FIG. **4**) of any known type, as, for example, an electrical servo system that controls drive assembly **40**, to move the vehicle in the direction towards the station selected as the destination station and at the velocity determined by the distance from the destination station in response to the two signal pulses. The control means also comprises a direction indicating means responsive to the sequence of occurrence of the signal pulses, which indicates the direction the vehicle must move, and controls the driving means through driving control means **80** to move the vehicle in the direction corresponding to the sequence of occurrence; and an interval-sensing means for controlling the driving means through driving control means **80** to move the vehicle at selected velocities.

The direction indicating means, FIG. **3**, comprises a first flip-flop circuit **101** and a second flip-flop circuit **102** that are set by the signal pulses along lines **79** and **65** from coincidence detectors **78** and **88**, and a polarity control circuit **105** having a relay **106** and a relay **107**. Depending on which coincidence detector output occurs first, which is correlated to the time relationship of the pulses, one of the particular flip-flops is set to produce an output at its upper output terminal **01** **101A** or **102A** and thereby energize either relay **106** which has a winding **106W** and a normally open contact **106A** or relay **107** which has a winding **107W** and a normally open contact **107A**. The contacts are connected in a circuit having a power source **109** with a positive terminal **110** and a negative terminal **111**, and depending upon which of the contacts closes first, apply a potential of a selected polarity either through a resistor **113** or a resistor **114** indicating the direction that the vehicle is to move. This output is applied along a line **115** to the driving control means which controls the driving means accordingly and moves the vehicle in the appropriate direction.

The interval sensing means also receives the two signal pulses along lines **79** and **65** and comprises flip-flop circuits **101** and **102**, AND-gates **117** and **118** connected to receive the outputs of flip-flop circuits **101** and **102**; an OR gate connected to receive the outputs of AND gates **117** and **118**; and AND-gate **120** connected to receive the pulses from multivibrator **62**, an input along line **82** from any source indicating that the system has been energized, and strobe input **72A** from strobe switch **76** which senses strobe magnet **52** indicating that the vehicle is adjacent a location and therefore in a position to sense coded magnets **50A** through **50F**; a ripple counter **125**; and a speed selection circuit **127** (FIG. **4**) that provides the input signals to the driving control means to control the vehicle speed.

Ripple counter **125** is of any known type and in this embodiment has three counting circuits **130**, **134**, and **138** each of which has AND gate circuits **131**, **135** and **139**, respectively, and flip-flop circuits **132**, **136** and **140**, respectively. The flip-flop circuits change state upon receiving a set or counting input at an input terminal C and produce an output at terminals **133**, **137** and **141** only when this terminal is switched from an "on" state to an "off" state. This output pulse is sent to the AND gate of the following counting circuit and it performs a counting function. The flip-flop circuits are reset by an input to their R terminals. Ripple counter **125** also comprises six AND gates **151** through **156**. An inverter **145** provides an input to AND gate **131** of initial counting circuit **130** from AND gate **156**. Ripple counter **125** thereby provides three different output conditions at lines **160**, **161** and **162** that are used to indicate a high, intermediate and low speed requirement for movement of the vehicle.

The control means also comprises a destination sensing means for producing a destination output signal that comprises an AND gate **159** that receives the signal pulses from coincidence detectors **78** and **88** along lines **79** and **65**, respectively. Upon simultaneous occurrence of the location signal pulse and the destination indication pulse, an output is produced along line **163**.

This output is applied to the speed selection circuit to control the final movement of the vehicle in response to a fine positioning means **198** for stopping and positioning the vehicle at its destination that comprises centering magnets **54** and a centering switch **77** that responds to the magnets to finally position the vehicle at the destination and may be of any type that produces an appropriate signal to enable a servo system or similar system as driving control means **80** to accurately stop and position the vehicle.

The speed selection circuit (FIG. **4**) receives inputs along conductors **160**, **161**, and **162** from ripple counter **125** and along conductor **163** from AND-gate **159** and applies this input into a logic component group having OR-gates **170**, **171**, **172** and **173**; flip-flop circuits **176** and **177** responsive to the OR gate outputs; and AND gates **180**, **181**, **182** and **183** having outputs along lines **190**, **191**, **192**, and **193**, respectively. A power set input **165** is also provided to the OR gates to reset the flip-flop circuits to a position turning on AND-gate **183** to produce an output at conductor **193** to the driving control means to cause movement of the vehicle at the very slow fine positioning velocity.

In the operation of the system, vehicle **11** is moved from station to station as required to transfer material units. Upon the determination that the vehicle should move from its present station to a destination station, the system is activated by selecting a destination for the vehicle and by applying an energization or "go" input **82** to AND-gate **120** (FIG. **3**). Multivibrator pulse generators **61** and **62** and counters **67** and **68** produce the defined groups of pulses that are correlated to the physical location of the stations available to the stacking vehicle. If the vehicle is at a station as is typically the case, strobe input **72A** is also applied to AND-gate **120**. If no strobe input is present, interlocking switching circuits (not shown) would energize power reset line **165** in speed selection circuit **127** (FIG. **4**) and operate the vehicle at very slow velocity until a station was reached at which time the vehicle location would be "known" to the system. Coincidence detectors **78** and **88** produce the signal pulse outputs which indicate the direction of vehicle movement. The occurrence of the first counting

pulse for each of the defined groups of pulses and the pulses are synchronized by synchronizing circuit **69** by controlling slave multivibrator **62** and slave counter **68**. The coincidence detector signal pulses are received by flip-flop circuits **101** and **102** which are reset at the beginning or end of each cycle or group of pulses by a reset signal from counter **68** along a line **66**. The setting of one of the flip-flop circuits energizes relay **106** or **107** closing either contact **106A** or **107A** to provide a polarity output to driving control means **80** along line **115** that causes vehicle movement in the direction towards the destination station.

The setting of one of flip-flop circuits **101** or **102** also activates AND-gate **117** or AND-gate **118**. Counting circuit **130** of ripple counter **125** then receives a signal from OR gate **119** along a line **131B** and from AND-gate **120** along a line **131A** at each pulse if a strobe signal is present along line **72A** and an energization signal along line **82**. AND-gate **131** of counting circuit **136** also receives an input signal along a line **131C** through inverter **145** because AND-gate **156** of ripple counter **125** does not have an output at this time. The counting circuits of the ripple counter are automatically reset at the beginning of each group of pulses by the reset pulse received along line **66**. The ripple counter receives pulses and counts the pulses during the interval between the two signal pulses until the second of flip-flop circuits **101** or **102** is set which turns off AND-gate **117** or **118**, whichever is on, and thereby turns off OR-gate **119**. The counting of the pulses ends with one AND gate of AND-gates **151** through **156** turned on. With one, two or three interval pulses AND gate **151**, **152**, or **153** is turned on to produce a signal along line **162**, with four or five interval pulses AND gate **154** or **155** is turned on to produce a signal along line **161**, and with six or more interval pulses AND-gate **156** is turned on to produce a signal along line **160** which also is an input to inverter **145**. The input to inverter **145** upon the count of the sixth pulse inactivates ripple counter **125** because the output of inverter **145** turns off AND gate **131** of counting circuit **130**. The counting repeats for each counting cycle as long as a strobe signal is present and information is always updated at each intermediate station as the vehicle moves toward a destination station.

When the vehicle arrives at its destination, the two signal pulses occur along lines **79** and **65** simultaneously to turn on AND-gate **159** and to produce the fine positioning output along line **163**. The inputs are applied along lines **160**, **161**, **162** and **163** to speed selection circuit **127** (FIG. **4**). The input along line **160** is a high speed signal that turns on OR gates **170** and **172** to set flip-flop circuits **176** and **177** to turn on AND-gate **180** and provide a high speed signal along line **190** to driving control means **80**. The input along line **161** is an intermediate speed signal that turns on OR gates **170** and **173** to set flip-flop circuit **176** and reset flip-flop circuit **177** to turn on AND-gate **181** and provide an intermediate speed output along line **191** to driving control means **80**. The input along line **162** is a slow speed signal that turns on OR gates **171** and **172** to reset flip-flop circuit **176** and set flip-flop circuit **177** to turn on AND-gate **182** and provide a slow speed signal along line **192** to driving control means **80**. Any speed selected continues until a change of input occurs to change the conditions of the flip-flop circuits. The input along line **163** is a fine positioning speed signal that turns on OR gates **171** and **172** and resets flip-flop circuits **176** and **177** to turn on AND-gate **183** and provide a fine positioning speed signal along line **193** to driving control means **80** and driving control means **80** then is responsive to the output of fine positioning means **198** obtained from centering switch **77** to stop the vehicle at the selected location.

SIMULTANEOUS TIME SEQUENCE ELECTRICAL OUTPUTS

FIG. **6** is a plot of the signals at the various points indicated by letters on FIG. **3**. In this chart, time sequence is plotted horizontally, while the simultaneous signals at various parts of the circuit are shown vertically. The letter designations at the left of the chart correspond to the lettered points shown in FIG. **3**. In the preferred form of this circuit, the multivibrator signal has a frequency of 100 kilohertz, and the counters each have 11 output conductors and can count up to **256** in binary numbers. In other words, the counters count to 256 almost 400 times per second. For illustrative purposes, and to maintain simplicity, chart **6** illustrates counters with four output conductors capable of counting up to 16 in binary numbers.

Referring to FIGS. **3** and **6**, **61** is a free-running master multivibrator, while **62** is a slave multivibrator synchronized with the master multivibrator **61** by means of a reset pulse generated at the end of each counting sequence through the synchronizing circuit **69**. The output of **61** and **62** are, for all practical purposes, identical and is indicated as A in both FIGS. **3** and **6**. In the illustration at the top of FIG. **6**, A is shown as a repeating pulse with 16 pulses to a counting cycle (as mentioned above, the actual preferred form has 256 pulses to this cycle). The pulse output from **61** is fed into a master binary counter **67**, while the pulse output from **62** is fed into a similar counter shown as slave counter **68**. The outputs of these two counters are identical, and is shown in both FIGS. **3** and **6** as B. For illustrative purposes, we have shown four conductors which permit counting to 16 in binary numbers. They are labeled **B1**, **B2**, **B3**, and **B4** in FIG. **6**. These counters count up through **16** and are then reset and start counting over again. They each comprise a group of flip-flop circuits so arranged that they are indexed by each pulse from the multivibrator. Referring to FIG. **6**, pulse **1** causes current to flow in **B1**; pulse **2** carries current to flow in **B2**, but not in **B1**; pulse **3** causes current to flow in both **B1** and **B2**; pulse **4** causes current to flow in **B3**, but not in any of the other conductors. This continues as shown in FIG. **6** in such a manner that the voltage or current in these conductors creates binary number groups. Referring to FIG. **3**, **75** schematically indicates the pickup **71** and is actuated by individual stationary arrays **48A**, **48B**, **48C**, **48D**, **48E**, **48F**, etc. The switching array on **71** "reads" the magnetic array **48A**, etc., located at each bin location so as to provide an electrical output in the conductors leading from **75** to **78** which may be read as a binary number. Here again, for illustrative purposes, we have indicated a four wire system which, with various combinations of energization, can be read as a binary number up to 16. (In the preferred embodiment, we use eleven conductors which may be read by various combinations of voltage to binary numbers up to 256.) For simplicity in illustrating, we show four conductors which, by various combinations of voltages, may read binary numbers up to 16. In other words, in such a simplified version used for illustrative purposes, the bin position address would be numbered from 1 to 16. To illustrate this, we have assumed that the stacker is presently at position **4**. In this position, we would, of course, have an electrical voltage in conductor **C3**, and no voltage in the other conductors, **C1**, **C2** and **C4**. The output from **75** is compared with the output from **68**. As the counter **68** counts in binary numbers up to **16**, there would be coincidence between the conductors energized by **68** and those energized by **75** at the number **4**. Referring to FIG. **3**, the output from **78** through the conductor **79** is shown at B. Referring to FIG. **6**, the sequence of voltages at D is shown to be zero except at No. **4** where a pulse appears each time the slave counter **68** counts through four in its cycle.

Referring again to FIG. **3**, **85** is a schematic showing of the destination indicator. The output of this indicator is in binary code, and for illustrative purposes, we have indicated four conductors so that it is possible to introduce a destination command from 1 up to 16. For illustrative purposes, we have indicated a command of position address **8** and referring to FIG. **6**, this shows electric voltage **E4**, but in none of the other conductors. Here again, as described in connection with **68** and **78**, the same comparing of binary numbers in the form of voltages is accomplished. Here, the master counter **67** again counts from 1 to 16 as energized by the pulses from the multivibrator **61**. In FIG. **6**, the output of the multivibrator is

shown as the A signal and the output of the master counter **67** is shown as signals **B1**, **B2**, **B3**, and **B4**. The output of the destination command indicator **85** is shown as **E1**, **E2**, **E3**, and **E4**, with **E4** energized, thereby indicating by binary number the destination address **8**. Here again, when there is coincidence or matching between the signal from **85** and the signal from **67**, a pulse is generated by **88** which is fed out through the line **65** as the signal F. Referring to FIG. **6**, there is an indication that no signal is generated at F except at the point **8**.

The pulse D coming through line **79** energizes the flip-flop circuit **102** to turn it on and thus a DC signal G is generated in **102A** starting at pulse **4** and continuing through the cycle of counting until a reset pulse is generated in **66** to reset the flip-flop circuit **102**. The signal output G is, therefore, zero until count **4**, and then is a positive signal through the remainder of the counting sequence.

The pulse F in line **65**, from the detector **88**, likewise triggers the flip-flop circuit **101** by energizing the set terminals to generate the signal H which starts at the pulse **8** of the multivibrator and continues through the counting sequence until the reset pulse at the end of the sequence energizes terminal R of the flip-flop circuit **101**.

The direction signal I in the line **115** is controlled by switches **106A** and **107A** which, in turn, are controlled by the direction control switch shown generally as **105** and including **106** and **107**. The selection of the switch to be closed, and thereby the selection of the polarity of the signal is determined by the sequence of occurrence of the signals H and G. In the signal sequence shown in FIG. **6**, the signal G appears first and, therefore, the switch **107A** will be closed and signal I will be a positive signal, which through the control system, tells the stacker to proceed from position **4** toward position **8**.

Once switch **107A** is closed, any signal from H is ineffective to close **106A** and **107A** remains closed until a signal appears in which signal H appears in the cycle previous to signal G. When H appears before G does, then switch **107A** is opened and switch **106A** is closed, thus giving the power drive a negative signal which drives the stacker toward lower numbered bin addresses.

Gates **117** and **118**, being "AND" gates, with **119** an "OR" gate, a signal J appears when there is a signal H in the line **101A** and not a signal in **102A**, or vice versa. Therefore, the signal J appears when there are pulses between position No. **4** and position No. **8** in our illustration (FIG. **6**). The circuit **125** counts the number of pulses received from the slave multivibrator **62** while a signal is appearing at J in line **131B**. If over six pulses appear, a signal is generated in line **160** to drive the stacker at high speed. The gate **154** is energized if there are four pulses, and the gate **155** energized if there are five pulses. Therefore, if either four or five pulses appear during the time a signal J is impressed in the line **131B**, a stacker is controlled on intermediate speed through the line **161**. Likewise, the gate **153** is energized by three pulses, **152** by **2** pulses, and **151** by one pulse. Therefore, if either one, two or three pulses appear while there is a signal J in **131B**, the stacker is driven at low speed. As will be seen by FIG. **6**, the number of pulses generated during this interval indicates the number of bins between present position and command position. The stacker starts to slow down at five bin positions away from command position and goes into low speed at three bins away from destination. When the signal D and signal F appear at the same time, this indicates the stacker is at command position and the final positioning is accomplished through energization of the line **163** with lines **160**, **161**, and **162** being deenergized.

While this specification contains a written description of the invention and the manner and process of making and using it and sets forth the best mode contemplated of carrying out my invention, there are many variations, combinations, alterations and modifications of the invention that can be made within the spirit of the invention and the scope of the appended claims.

I claim:

1. A vehicle control system having a vehicle movable to a plurality of stations along a selected path, a driving means for moving the vehicle, and a means for controlling the driving means, said means for controlling comprising:

a designation means for producing a unique designation signal for each respective station,

a pulse means for producing groups of pulses correlated by sequence of occurrence to sequence of position of the stations,

said pulse means comprising a pulse generator means for producing a continuous series of pulses, and a counting means adapted to receive the pulses for producing the defined groups of pulses correlated by sequence of occurrence to the sequence of position of the stations,

a location means responsive to the groups of pulses and responsive to the unique designation signals for producing a location signal pulse indicating the station at which the vehicle is located,

said location means comprises a location sensing means connected to the vehicle and adapted to respond to the destination means at the station at which the vehicle is located for producing a vehicle location signal indicating the location of the vehicle at said station, and a location indicating means correlated to and responsive to the pulse means output and the vehicle location signal for producing the location signal pulse upon the occurrence of the counting means pulse corresponding to the station indicated by said vehicle location signal,

a destination means responsive to the groups of pulses for producing a destination signal pulse indicating the station selected as the vehicle destination, and

a control means responsive to the location signal pulse and the destination signal pulse for controlling the driving means to move the vehicle.

2. A vehicle control system according to claim **1** wherein said destination means comprises a destination signal means for producing a destination signal indicating the selected vehicle destination, and a destination indicating means correlated to and responsive to the counting means pulses and to the destination signal for producing the destination signal pulse.

3. A vehicle control system according to claim **2** wherein said control means comprises a direction means responsive to the sequence of occurrence of the location signal pulse and the destination signal pulse for controlling the driving means to move the vehicle in the direction corresponding to the sequence of occurrence of said signal pulses and thereby in the direction toward the station selected as the destination station.

4. A vehicle control system according to claim **3** wherein said control means comprises an interval sensing means for counting the number of interval pulses occurring between the occurrence of the location signal pulse and the occurrence of the destination pulse and for controlling the driving means to move the vehicle at a higher selected velocity when the number of said interval pulses is greater than a selected number and to move the vehicle at a lower selected velocity when the number of interval pulses is equal to or fewer than said selected number.

5. A vehicle control system according to claim **4** also comprising a destination sensing means responsive to the simultaneous occurrence of the location signal pulse and the destination signal pulse for indicating the location of the vehicle at the selected vehicle destination.

6. A vehicle control system according to claim **1** wherein said control means comprises an interval sensing means for counting the number of interval pulses occurring between the occurrence of the location signal pulse and the occurrence of the destination pulse and for controlling the driving means to move the vehicle at a higher selected velocity when the number of said interval pulses is greater than a selected number and to move the vehicle at a lower selected velocity when the number of interval pulses is equal to or fewer than said selected number.

7. A vehicle control system according to claim 1 wherein said control means comprises an interval sensing means for counting the number of interval pulses indicating the number of stations between the vehicle location and the vehicle destination occurring between the occurrence of said two signal pulses and for controlling the driving means to move the vehicle at a high selected velocity when the number of said interval pulses is greater than a first selected number, to move the vehicle at an intermediate selected velocity when the number of interval pulses is equal to or fewer than said first selected number and greater than a second selected number, and to move the vehicle at a low selected velocity when the number of interval pulses is equal to or fewer than said second selected number.

8. A vehicle control system having a vehicle movable to a plurality of stations along a selected path, a driving means for moving the vehicle, and a means for controlling the driving means, said means for controlling comprising:

a designation means for producing a unique designation signal for each respective station,

a pulse means for producing groups of pulses correlated by sequence of occurrence to sequence of position of the stations,

a master pulse generator means for producing a continuous series of pulses located in the main control center,

a slave pulse generator means for producing a continuous series of pulses located in the remote control center,

a main counting means located in the main control center adapted to receive pulses from the master pulse generator for producing defined groups of pulses correlated by sequence of occurrence to the sequence of position of the stations,

a remote counting means located in the remote control center adapted to receive the pulses from the slave pulse generator,

a synchronizing means located for synchronizing outputs of the first and second counting means,

a location means responsive to the groups of pulses and responsive to the unique designation signals for producing a location signal pulse indicating the station at which the vehicle is located,

a destination means responsive to the group of pulses for producing a designation signal pulse indicating the station selected as the vehicle's designation, and

a control means responsive to the location signal pulse and a destination signal pulse for controlling the driving means to move the vehicle.

9. A vehicle control system according to claim 8 wherein said designation means comprises magnetic devices at each respective station positioned to produce coded magnetic fields unique to each respective station.

10. A vehicle control system according to claim 9 wherein said pulse means comprises a multivibrator producing a continuous series of pulses; and a digital counter connected to receive the pulses and to produce an output defining said pulses in repeating groups of pulses starting with a selected start pulse with the pulses of said groups of pulses individually corresponding to respective stations.

11. A vehicle control system according to claim 10 wherein said location means comprises a sensing device having groups of magnetically responsive reed switches mounted on the vehicle adapted to respond to the designation device magnetic fields at the stations when the vehicle is at a respective station to produce a vehicle location signal indicating the position of the vehicle at said respective station; and a coincidence counter detector connected to receive the digital counter output and the vehicle location signal for producing a location signal pulse upon the occurrence of the pulse corresponding to the station indicated by said vehicle location signal.

12. A vehicle control system according to claim 11 wherein said destination means comprises a second coincidence counter connected to receive the digital counter output and to receive an input indicating a station selected as the vehicle destination.

13. A vehicle control system according to claim 12 wherein said control means comprises:

a switching circuit responsive to a first occurring location signal pulse to produce an output of one polarity and to a first occurring destination signal pulse to produce an output of another polarity;

a means responsive to the polarity of the control signal to control the driving means to move the vehicle in one direction with one polarity and the other direction with the other polarity;

a ripple counter connected to count the number of interval pulses occurring between the occurrence of the first occurring signal pulse and the second occurring signal pulse; and

means responsive to the ripple counter output for controlling the driving means to move the vehicle at a higher selected velocity when the number of said interval pulses is greater than a selected number and to move the vehicle at a lower selected velocity when the number of interval pulses in equal to or fewer than the selected number.

14. A vehicle control system according to claim 13 wherein said destination means also comprises a centering magnet located to provide a final positioning signal; and said system also comprises an AND gate connected to receive the signal pulses to produce an output when said signal pulses are simultaneous, and means responsive to the AND gate output for controlling the driving means from the centering magnet to center the vehicle at its destination station.

15. A vehicle control system having a vehicle movable to a plurality of stations along a selected path, a driving means for moving the vehicle, and a means for controlling the driving means, said means for controlling comprising:

a designation means at each station for producing a unique designation pulse group signal for each respective station,

a pulse means for producing defined groups of pulses correlated by sequence of occurrence to sequence of position of the stations with at least of said pulses respectively corresponding to said stations,

a location means responsive to the groups of pulses and responsive to the unique designation signals for producing a location signal pulse upon the occurrence of the pulse group signal corresponding to said station thereby indicating the station at which the vehicle is located;

a destination means responsive to the groups of pulses for producing a destination signal pulse upon the occurrence of the pulse group signal corresponding to a selected vehicle destination station thereby indicating the destination station of the vehicle; and

a control means responsive to the location signal pulse and the destination signal pulse for controlling the driving means to move the vehicle at a selected velocity in the direction toward the station selected as the destination station.

16. A vehicle control system according to claim 15 wherein said pulse means comprises a pulse generating device producing a continuous series of pulses; and a counting means adapted to receive the pulses for grouping the pulses into defined repetitive groups correlated by sequence of occurrence to the sequence of position of the stations with each of said stations corresponding to one of said pulses of each of said groups.

17. A vehicle control system according to claim 16 wherein said location means comprises a location sensing means connected to the vehicle and adapted to respond to the designation signal at the station at which the vehicle is located for producing a vehicle location signal indicating the location of the vehicle at said respective station; and a location indicating means correlated to and responsive to the counting means pulses and the vehicle location signal for producing the location signal pulse upon the occurrence of the counting means pulse corresponding to the station indicated by said vehicle location signal.

18. A vehicle control system according to claim 17 wherein said destination means comprises a means for producing a

destination signal indicating the selected vehicle destination, and a destination indicating means correlated to and responsive to the counting means pulses and the destination signal for producing the destination signal pulse upon the occurrence of the counting means pulse corresponding to the selected vehicle destination.

19. A vehicle control system according to claim 18 wherein said control means comprises a direction means responsive to the sequence of occurrence of the location signal pulse and the destination signal pulse for controlling the driving means to move the vehicle in the direction corresponding to the sequence of occurrence of said two signal pulses and thereby in the direction toward the station selected as the destination station.

20. A vehicle control system according to claim 19 wherein said control means comprises an interval sensing means for counting the number of interval pulses occurring between the occurrence of the location signal pulse and the occurrence of the destination pulse and for controlling the driving means to move the vehicle at a higher selected velocity when the number of said interval pulses is greater than a selected number and to move the vehicle at a lower selected velocity when the number of interval pulses is equal to or fewer than said selected number.

21. A vehicle control system according to claim 19 wherein said control means comprises an interval sensing means adapted to count the number of interval pulses indicating the number of stations between the vehicle location and the vehicle destination occurring between the occurrence of the first of the location signal pulse or the destination pulse for controlling the driving means to move the vehicle at a high selected velocity when the number of said interval pulses is greater than a first selected number, to move the vehicle at an intermediate selected velocity when the number of interval pulses is equal to or fewer than said first selected number and greater than a second selected number, and to move the vehicle at a low selected velocity when the number of interval pulses is equal to or fewer than said second selected number.

22. A vehicle control system according to claim 20 also comprising a destination sensing means responsive to the simultaneous occurrence of the location signal pulse and the destination signal pulse for indicating that the vehicle is at the selected destination station.

23. A vehicle control system according to claim 15 wherein said location means comprises a location sensing means connected to the vehicle and adapted to respond to the unique designation signal at the station at which the vehicle is located for producing a vehicle location signal indicating the location of the vehicle at said respective station; and a location indicating means correlated to and responsive to the pulse means pulses and the vehicle location signal for producing a location signal pulse upon the occurrence of the pulse means pulse corresponding to the station indicated by said vehicle location signal.

24. A vehicle control system according to claim 15 wherein said destination means comprises a means for producing a destination signal indicating the selected vehicle destination; and a destination indicating means correlated to and responsive to the pulse means pulses and the destination signal for producing the destination signal pulse upon the occurrence of the pulse means pulse corresponding to the selected vehicle destination.

25. A vehicle control system according to claim 15 wherein said control means comprises a direction means responsive to the sequence of occurrence of the location signal pulse and the destination signal pulse for controlling the driving means to move the vehicle in the direction corresponding to the sequence of occurrence of said signal pulses and thereby in the direction toward the station selected as the destination station.

26. A vehicle control system according to claim 15 wherein said control means comprises an interval sensing means adapted to count the number of interval pulses occurring between the occurrence of the location signal pulse and the occurrence of the destination pulse for controlling the driving means to move the vehicle at a higher selected velocity when the number of said interval pulses is greater than a selected number and to move the vehicle at a lower selected velocity when the number of interval pulses is equal to or fewer than said selected number.

27. A vehicle control system according to claim 15 wherein said control means comprises an interval sensing means adapted to count the number of interval pulses indicating the number of stations between the vehicle location and the vehicle destination occurring between the occurrence of the two signal pulses for controlling the driving means to move the vehicle at a high selected velocity when the number of said interval pulses is greater than a first selected number, to move the vehicle at an intermediate selected velocity when the number of interval pulses is equal to or fewer than said first selected number and greater than a second selected number, and to move the vehicle at a low selected velocity when the number of interval pulses is equal to or fewer than said second selected number.

28. A vehicle control system according to claim 15 also comprising a destination sensing means responsive to the simultaneous occurrence of the location signal pulse and the destination signal pulse for indicating the location of the vehicle at the selected destination station.

29. A vehicle control system having a vehicle movable to a plurality of stations along a selected path comprising:

a driving means for moving the vehicle along the path and for stopping the vehicle at selected stations,

a designation means for producing a unique designation signal for each respective station,

a remote control center and a main control center with only one of said centers located on the vehicle,

a master pulse generating device producing a continuous series of pulses located in the main control center,

a slave pulse generating device producing a continuous series of pulses located in the remote control center,

a main counting circuit located in the main control center adapted to receive pulses from the master generating device and to define the pulses in groups of pulses correlated by sequence of occurrence to the sequence of position of the stations,

a remote counting circuit located in the remote control center adapted to receive the pulses from the slave pulse generating device,

a synchronizing means located in the main control center for synchronizing the outputs of the main and remote counting circuit,

a location means on the vehicle responsive to the designation signal at the station at which the vehicle is located and to the main counting circuit pulses for producing a location signal pulse upon the occurrence of the pulse corresponding to said station thereby indicating the location of the vehicle at said respective station;

a destination means for producing a destination signal pulse upon the occurrence of the pulse corresponding to the selected vehicle destination thereby indicating the selected vehicle destination, and

a direction means responsive to the location signal pulse and the destination signal pulse for controlling the driving means to move the vehicle in the direction corresponding to the sequence of occurrence of said two signal pulses and thereby in the direction toward the station selected as the destination station, whereby said vehicle is moved by said driving means to said destination location.

30. A vehicle control system according to claim 29 wherein said designation means comprises coded groupings of magnets at each station; and said location means comprises a sensing device located on the vehicle adapted to respond to the coded magnet group at the station at which the vehicle is located for producing a unique vehicle location signal in response to said coded magnet group; and a count coincidence detector

located on the vehicle and responsive to the main counting circuit pulses and the vehicle location signal for producing the location signal pulse upon the occurrence of the pulse corresponding to said station.

31. A vehicle control system according to claim 29 wherein said control means comprises a switching circuit responsive to the sequence of occurrence of the signal pulses to provide a power source of one polarity if the location signal pulse occurs first and of the other polarity if the destination signal pulse occurs first; means responsive to the polarity of the source to control the direction of movement of the vehicle in response to said polarity; a pulse counter adapted to count the number of interval pulses occurring between the occurrence of the signal pulses to produce one output when the number of said interval pulses is greater than a selected number and to produce another output when the number of interval pulses is equal to or less than said selected number; and means responsive to the pulse counter outputs to control the driving means to move the vehicle at one velocity in response to one of said pulse counter outputs and at another velocity in response to the other of said pulse counter outputs.

* * * * *

UNITED STATES PATENT OFFICE
CERTIFICATE OF CORRECTION

Patent No. 3,646,890 Dated 3/7/72

Inventor(s) James H. Snyder

It is certified that error appears in the above-identified patent and that said Letters Patent are hereby corrected as shown below:

Col. 3, line 58, after "terminal" delete "o1"

Col. 6, line 70, after "voltage" add - in -

Col. 7, line 41, after "119" insert - being -

Claim 13, Col. 10, line 20, "in" should be - is -

Claim 15, Col. 10, line 38, after "least" and before "of" insert the word - same -

Signed and sealed this 22nd day of August 1972.

(SEAL)
Attest:

EDWARD M.FLETCHER,JR.
Attesting Officer

ROBERT GOTTSCHALK
Commissioner of Patents

FORM PO-1050 (10-69)

USCOMM-DC 60376-P69
* U.S. GOVERNMENT PRINTING OFFICE : 1969 O—366-334

UNITED STATES PATENT OFFICE
CERTIFICATE OF CORRECTION

Patent No. 3,646,890 Dated 3/7/72

Inventor(s) James H. Snyder

It is certified that error appears in the above-identified patent and that said Letters Patent are hereby corrected as shown below:

Col. 3, line 58, after "terminal" delete "o1"

Col. 6, line 70, after "voltage" add - in -

Col. 7, line 41, after "119" insert - being -

Claim 13, Col. 10, line 20, "in" should be - is -

Claim 15, Col. 10, line 38, after "least" and before "of" insert the word - same -

Signed and sealed this 22nd day of August 1972.

(SEAL)
Attest:

EDWARD M.FLETCHER,JR.
Attesting Officer

ROBERT GOTTSCHALK
Commissioner of Patents

FORM PO-1050 (10-69)

USCOMM-DC 60376-P69
* U.S. GOVERNMENT PRINTING OFFICE : 1969 O—366-334