H. WILLIAMS.

SECTIONAL FURNITURE.

APPLICATION FILED FEB. 18, 1914.

1,219,891.

Patented Mar. 20, 1917.

2 SHEETS—SHEET 1.

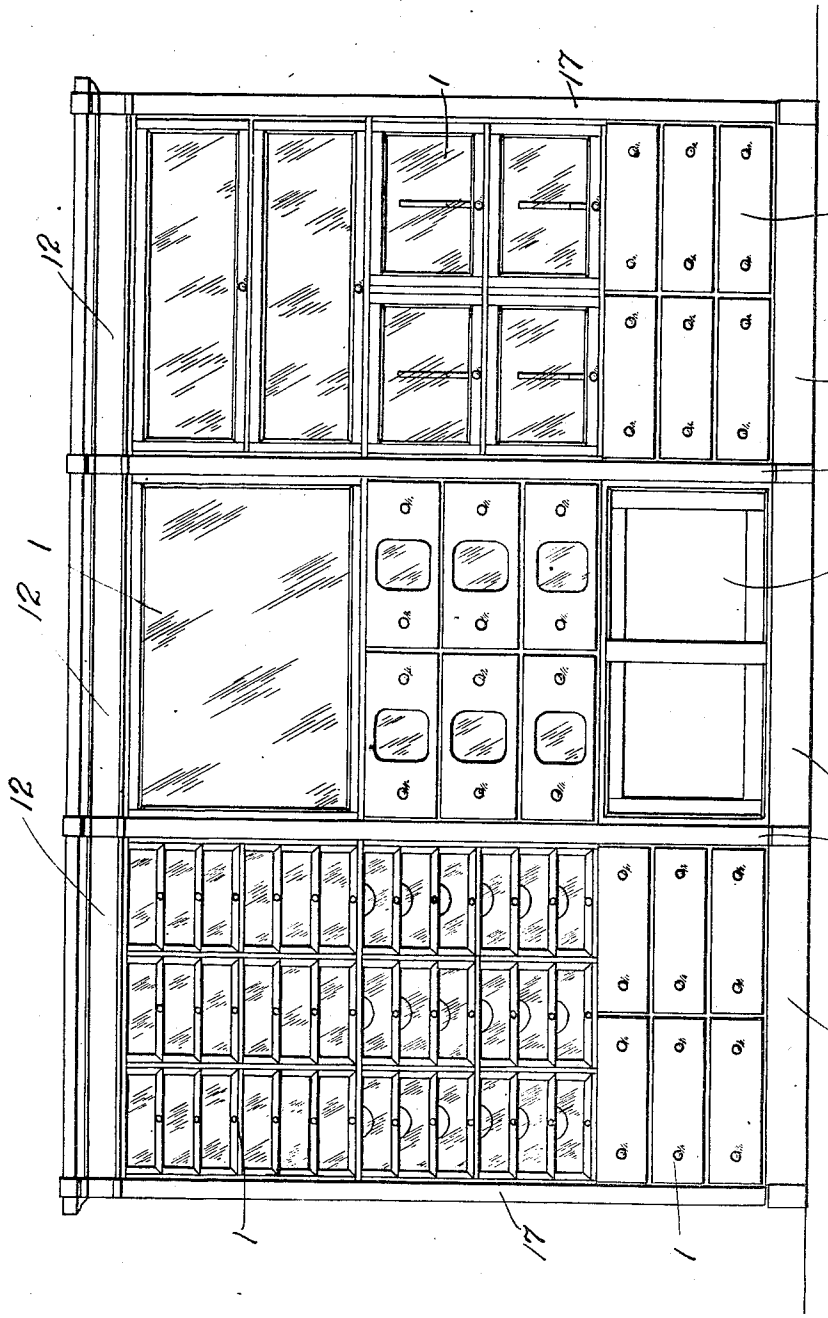

Fig. 1.

WITNESSES.

I. E. Livernace

L E Caswell

INVENTOR.

Henry Williams

By Frank E. Livernace, Jr.

attorney

H. WILLIAMS.

SECTIONAL FURNITURE.

APPLICATION FILED FEB. 18, 1914.

1,219,891. Patented Mar. 20, 1917.

2 SHEETS—SHEET 2.

Fig. 3.

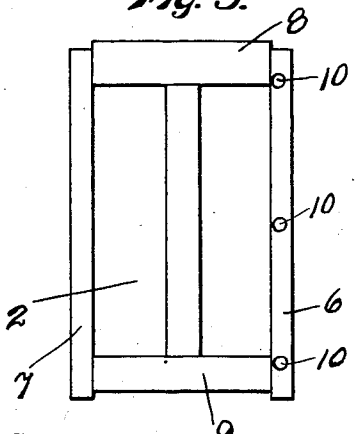

Fig. 2.

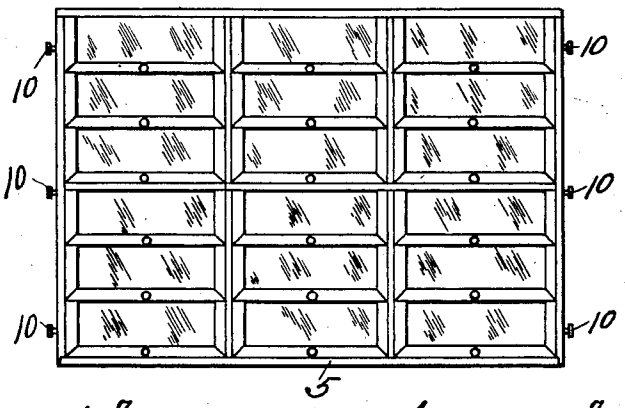

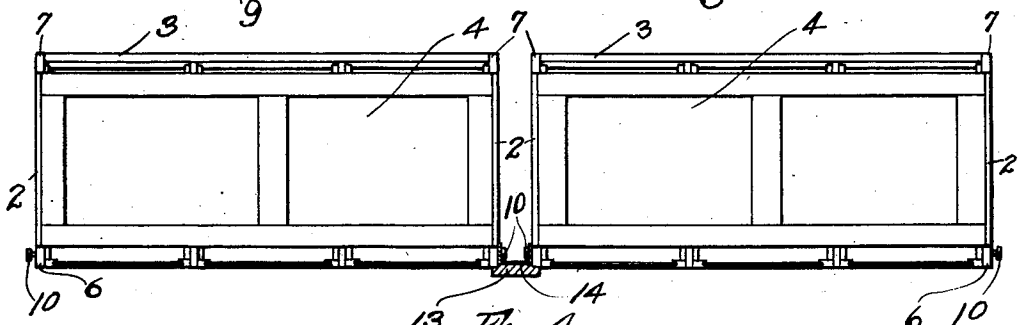

Fig. 4.

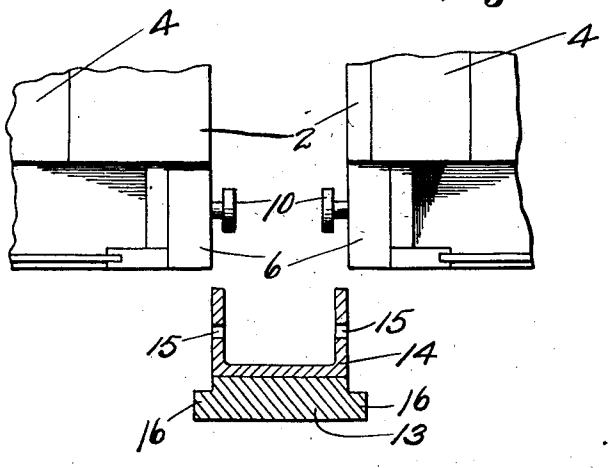

Fig. 5.

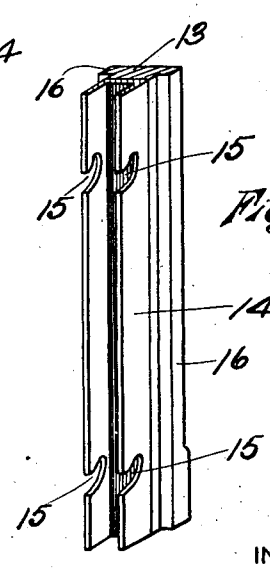

Fig. 6.

WITNESSES.

I. E. Liverance

L E Carroll

INVENTOR.

By Henry Williams

Frank E. Liverance Jr.

attorney

UNITED STATES PATENT OFFICE.

HENRY WILLIAMS, OF CHICAGO, ILLINOIS, ASSIGNOR TO GRAND RAPIDS SHOW CASE COMPANY, OF GRAND RAPIDS, MICHIGAN, A CORPORATION OF MICHIGAN.

SECTIONAL FURNITURE.

1,219,891. Specification of Letters Patent. **Patented Mar. 20, 1917.**

Application filed February 18, 1914. Serial No. 819,325.

To all whom it may concern:

Be it known that I, HENRY WILLIAMS, a citizen of the United States, and a resident of the city of Chicago, in the county of Cook and State of Illinois, have invented a certain new, useful, and Improved Construction in Sectional Furniture, of which the following is a specification, which in connection with the accompanying drawings makes a full disclosure of a complete and operative embodiment of the invention such that others may understand the same.

This invention relates to furniture constructions of sectional nature, in which various designs of sections may be used and built together into a complete whole, the sections being placed in vertical series one above the other to any desired or required height to form a single independent vertical multiple section structure; and it is the principal object and purpose of my invention to provide means for joining a plurality of said independent vertical multiple sections together in horizontal series to any extent or number desired, and securing all the sections together firmly against movement with respect to the other sections, the joining or securing means coöperating with the sections in such manner that when applied thereto, the completed structure presents the appearance of a solid built in construction without sectional division. By this invention it is made possible that any number of vertical multiple sectional units may be joined together in horizontal series, and any space irrespective of the length thereof filled with the sections, a greater or less number being utilized as required by the limitations imposed by the space to be filled. The invention also contemplates the connection together of the vertical units, either in sectional or unitary form, in horizontal spaced relation, by means of posts or pilasters removably attached at the front of and between the adjacent ends of units so as to cover the spaces therebetween, tie them together, and give the appearance and effect of a solid built structure. The means for attaining these results together with various other important results and functions will be apparent on understanding of the construction illustrated in the drawings in which,

Figure 1 is a front elevation of a plurality of the sections in vertical and horizontal series and joined together by use of my invention, the appearance being that of a complete and solid structure without sectional division lines.

Fig. 2 is a front elevation of a single section.

Fig. 3 is an end view thereof.

Fig. 4 is a plan view of two sections placed end to end and with the joining means securing them together shown in sectional plan.

Fig. 5 is a fragmentary sectional and plan view of the ends of adjoining sections and the securing means therefor, with the parts disengaged.

Fig. 6 is a perspective view of a portion of the securing or joining post or pilaster for connecting the sections.

Like reference characters refer to like parts throughout the several views of the drawings.

The sections 1 used in the embodiment shown each comprises a frame having end and back members 2 and 3, a top member 4 not equal in width to the end members 2 and parallel front and rear bottom members 5 spaced apart and being of comparatively small width. The end members 2 are formed of front and rear vertical uprights 6 and 7 with upper and lower horizontal connecting members 8 and 9, the upper edge of the upper member 8 lying a short distance above the upper ends of the uprights 6 and 7, while at their lower ends, uprights 6 and 7 extend a similar distance below the lower edge of the adjacent member 9. The front and rear members 5 connect the lower ends of uprights 6 and 7 and are of substantially the same widths as said uprights. It will be apparent that the bottom of each section is adapted to fit over the top of another similarly constructed section frame and that said sections may be placed in vertical series to any desired height one above the other and held from forward or rearward movements with respect to each other. Each of the front upright members or uprights 6 is provided with a plurality of laterally extending headed pins 10, the heads being spaced a short distance from the sides of the uprights as shown.

In assembling a vertical multiple section unit, a base 11 having a top constructed similarly to the tops of the section frames is placed on the floor and the sections placed

thereon, one above the other to any desired height, the upper section receiving a top member 12 with a bottom formed like the bottom of a section and fitting the top of the upper section. The top 12 may be made ornamental according to any selected design. A series of these vertical multiple section units may be placed end to end with the headed pins 10 projecting toward each other from the adjacent ends of the sections, the vertical section units being spaced a short distance apart. It should be noted in this connection that after building up a series of these multiple vertical sectional units, positioning them end to end and with adjacent ends spaced apart, it is easy at any time to change the location of the sections in the different multiple sectional units. After the sections are once placed, it is many times desirable to interchange them or make substitutions so that certain sections adapted to contain certain articles of merchandise may be more conveniently located at different seasons of the year. With the sections positioned with reference to each other as set forth it is very easy to substitute for any section or to interchange sections without disturbing the remaining sections in any of series of multiple vertical sectional units, the spaces between the ends of said vertical sectional units permitting the ready handling of the sections in any certain vertical sectional unit and the removal and insertion of sections therefrom without interfering with the sections of adjacent multiple vertical sectional units. This is an important feature of the invention and one of great practical value and utility as will be readily apparent.

The adjacent ends of the sections are connected together and the space between the ends covered at the front by means of the following construction: A pilaster or post 13 having a length equal to the combined heights of a base, top and a vertical series of sections interposed between the base and top is provided on its inner side with a channel member 14, the web of the channel being secured to the face of the post or pilaster, and the flanges extending to the rear thereof as indicated in Figs. 4, 5 and 6, said flanges being provided at intervals corresponding to the vertical positioning of the headed pins on the sections with notches 15 opening at the edges of the said flanges and extending inwardly and upwardly into the body of each flange as shown. It is of course understood that the top and bottom members 12 and 11 are provided with headed pins 10 also in the same manner as are the section frames and that the flanges of the channel 14 are provided with corresponding notches 15 therefor. With two vertical multiple section units placed with ends adjacent but spaced apart substantially equal to the distance between the outer faces of the channel flanges, the notches 15 thereof will be in position to receive the shanks of said headed pins, the heads being positioned on the inner faces of the channel flanges. The adjacent ends of the sections may in this manner be tied or joined together by merely placing the joining post or pilaster in place and forcing the pins into the notches. Any other equivalent construction for securing the post or pilaster in place and permitting its quick and ready disengagement may be used quite as well. It will be observed that the pilaster may have a central thickened portion extending into the space between adjacent ends of sections, thereby reinforcing and strengthening the pilaster without the necessity of its projecting too far forward in front of the sections, and also may have lateral extensions or projecting portions 16 to either side of the plane of the channel flanges and that such portions when the pilaster is applied as above set forth come over the front side edges of the section frames, completely covering and disguising the meeting lines of the pilaster with the said sections, thus giving the appearance of unbroken solid construction, the said lateral extensions 16 being drawn tightly against the front side edges of the adjacent ends of the sections with the application of the pilaster thereto, and being retained thereagainst by reason of the wedging action of the sides of the notches 15 against the shanks of the pins 10. Of course any other equivalent means of drawing the lateral extensions 16 of the pilaster tightly against the sections may be provided without departing from my invention in this respect. The pilaster may be given any desired ornamental appearance to correspond with the design of the base and top members 11 and 12 to more completely accentuate this appearance.

The addition of multiple vertical sectional units in horizontal series may be extended to any desired degree by duplication of the above described method of attachment of the sections and the whole will appear as solid construction. End members of any desired type such as shown at 17 may be used to finish the construction when a required number of the sections have been secured together, and may be attached at the ends of the multiple vertical sectional units at either end of the whole structure. The method of attachment is not material to this invention. The section frames are adapted to receive a plurality of drawers of different forms and designs, or the fronts of said section frames may be closed by doors, wholly or partly of glass, or the section frames may be made to receive various articles of merchandise, books, and the like. Racks for carrying various articles may be

located therewithin behind glass fronts also. This is a matter of choice with the user of the sections, this invention not being in any manner concerned with the designs of the sections.

From this disclosure it will be apparent that I have provided a new and improved construction of sectional furniture by which a great number of sectional units may be securely attached together in vertical and horizontal series and held as securely as though said sections were built solidly together yet readily disconnected and interchanged when desired, there being no opportunity for vertical, lateral, or forward or backward movements of any section with respect to the other sections when attached together as described. It is also an important feature, practically, of this invention that furniture of this character may be made to standard dimensions and designs and held ready at all times to supply the demand therefor which varies greatly at different seasons of the year. The disclosure made, while specific to a complete and operative structure is not to be taken as specifically limiting the construction to the particular construction shown. Various modifications in structure within the spirit of the invention will occur to others skilled in the art and have occurred to me, and all such modifications falling within the scope of the appended claims are to be considered as included in my invention, the disclosure being taken as diagrammatic and illustrative, merely, of the invention and not limiting to any precise construction.

What I claim as new and desire to secure by Letters Patent is:—

1. Sectional furniture of the character described, comprising sections placed one above the other to form an independent vertical multiple sectional unit, a plurality of said multiple sectional units positioned end to end with adjacent ends spaced apart, a pilaster or post extending over and covering the space between the spaced apart adjacent ends of the sections and having an inwardly projecting portion, and means for detachably securing the adjacent ends of the sections to said inwardly projecting portions of the pilaster or post in their horizontal spaced relation to permit ready removal or interchangeability of the sections without disturbing other vertical sectional units.

2. Sectional furniture of the character described, comprising sections placed one above the other to form an independent vertical multiple sectional unit, a plurality of said multiple sectional units placed end to end with adjacent ends spaced apart, a removable post or pilaster extending over and covering the space between adjacent multiple sectional units, and detachable connections between the post or pilaster and the ends of adjacent sections including means connected to the post or pilaster and extending between the sections and permitting ready removal and interchangeability of the sections of a multiple sectional unit without disturbing the sections of an adjacent multiple sectional unit.

3. Sectional furniture of the character described, comprising independent series of superposed sections positioned end to end and with adjacent ends spaced apart, a post or pilaster located at the front of the adjacent ends of the sections and having an inwardly projecting portion extending into the space between the adjacent ends of the sections, and means detachably connecting the adjacent ends of the sections with the inwardly projecting portion of the pilaster to permit ready removal of the pilaster and any section of the series.

4. Sectional furniture of the character described, comprising independent series of superposed sections positioned end to end and with adjacent ends spaced a short distance apart, a post or pilaster located at the front of and lying between the adjacent ends of the sections, and means carried by the sections and by the post or pilaster adapted to have detachable engagement whereby the said sections and post or pilaster may be secured together or readily detached one from the other.

5. Sectional furniture of the character described, comprising a series of sections placed one above and resting one on the other to form an independent vertical multiple sectional unit, a plurality of said multiple units positioned end to end and with adjacent ends spaced apart, a post reaching from the bottom to the top of said multiple units and located at the front of and between the adjacent ends of adjacent sections, means carried by the sections of each multiple unit and means carried by the post for detachably engaging said means on the sections for securing the sections together in fixed relation to each other.

6. Sectional furniture of the character described, comprising sections placed one above the other to form an independent vertical multiple sectional unit, a plurality of said multiple units positioned end to end with adjacent ends spaced apart, a post reaching from the bottom to the top of said multiple units and located at the front of and between the adjacent ends of adjacent sections, means for detachably securing the said post and sections of the multiple units together whereby the post may be bodily removed from the said sections at will, and lateral extensions to said post overlapping the front edges of the said sections adjacent the post when the post and sections are connected together.

7. Sectional furniture of the character described, comprising a plurality of sections

positioned end to end and with adjacent ends spaced apart, a post located at the front of and between the adjacent ends of the sections, headed pins carried by the ends of the sections, a channel member secured to the post, and notches provided in the channel member adapted to receive the shanks of said pins, substantially as described.

8. Sectional furniture of the character described, comprising a plurality of sections located one above the other to form vertical multiple sectional units, a plurality of said multiple units positioned end to end and with adjacent ends spaced apart, a post reaching from the bottom to the top of said multiple units and adapted to be located at the front of and between the adjacent ends of the adjacent sections, headed pins projecting laterally from the sections of each multiple unit, a channel member secured to the post and having rearwardly extending flanges, and under-cut notches in said flanges located to be received by the shanks of said headed pins whereby the said posts and sections of the multiple units may be detachably connected together.

9. Sectional furniture of the character described comprising a plurality of sections placed one above and resting one on the other to form an independent vertical multiple sectional unit, a plurality of said multiple sectional units positioned end to end with adjacent ends spaced a distance apart, a post or pilaster reaching from the bottom to the top of said multiple sectional units and located at the front of and between the adjacent ends of adjacent sections, means for covering the meeting edges of the post or pilaster and the multiple sectional units consisting of lateral extensions to the post or pilaster overlapping the front edges of the sections adjacent the post or pilaster, and means for detachably securing the post or pilaster and multiple sectional units together and for tightly drawing said lateral extensions against the adjacent sections when the post or pilaster is connected therewith, said means permitting the ready disengagement of the post or pilaster at will.

10. Sectional furniture comprising two vertical multiple sectional units located end to end with adjacent ends spaced a distance apart, a post or pilaster comprised of a central thickened portion and lateral extensions at each side thereof, said post or pilaster located at the front of and between the adjacent ends of the vertical multiple sectional units with the central portion extending rearwardly into the space between the sectional units and the lateral extensions overlapping the adjacent edges of the sections, and means to detachably secure said post or pilaster to the said sectional units and for tightly drawing the said lateral extensions against the adjacent edges of the sections, said means having attachment to the central thickened portion of the post or pilaster.

11. In a construction of the character described, a plurality of units positioned horizontally end to end with adjacent ends spaced apart, a pilaster or post extending over and covering the space between the spaced apart ends of the units and having an inwardly projecting portion, and means for detachably securing the adjacent ends of the units to said inwardly projecting portion of the pilaster or post in their horizontal spaced relation to permit ready removal or interchangeability of the units without disturbing other units of the horizontal series.

12. In a construction of the character described, a plurality of units placed end to end with adjacent ends of units spaced apart, a removable post or pilaster extending over and covering the space between adjacent units, and detachable connections between the post or pilaster and the ends of adjacent units including means connected to the post or pilaster and extending between the units and permitting ready removal and interchangeability of the units without disturbing other units of the horizontal series.

13. In a construction of the character described, a plurality of units positioned end to end with adjacent ends spaced apart, a post or pilaster located at the front of and between the adjacent ends of the units, means for detachably securing said post or pilaster and adjacent units together whereby the post or pilaster may be bodily removed from said units at will, and lateral extensions to said post or pilaster overlapping the front edges of said units adjacent the post or pilaster when said post or pilaster and units are connected together.

In testimony whereof, I have hereunto affixed my signature in the presence of two witnesses.

HENRY WILLIAMS.

Witnesses:
E. J. Billo,
C. W. Mulliken.